REC 16-222

NEO GEOTHERMAL
1 New Hampshire Ave, Ste. 207
Portsmouth, NH 03801
Tel (603) 294-4850
www.NEOGEOThermal.com

NHPUC 10FEB'16PM1:43

February 9, 2016

Debra A. Howland
Executive Director
New Hampshire Public Utilities Commission
21 South Fruit Street, Suite 10
Concord, NH 03301-2429

Re: Application for Class I Thermal Renewable Energy Source Eligibility
233 Vaughan Street, Portsmouth, NH

Dear Ms. Howland:

NEO Geothermal, LLC (NEO Geothermal) is the owner and operator of a geothermal energy system located at 233 Vaughan Street in Portsmouth, NH. Pursuant to the New Hampshire Code of Administrative Rules PUC 2500, NEO Geothermal hereby submits the attached application to qualify 233 Vaughan Street as a Class I Thermal Renewable Energy Source.

All formal communications regarding this application should be directed to:

Anthony M. Callendrello
NEO Geothermal, LLC
1 New Hampshire Avenue, Suite 207
Portsmouth, NH 03801
Phone: (603) 294-2850
Fax: (603) 215-2918

Please feel free to contact me with any questions via telephone at (603) 766-8747 or via email at brodgers@baycorpholdings.com.

Sincerely,

William C. Rodgers

William C. Rodgers

# State of New Hampshire
# Public Utilities Commission

21 S. Fruit Street, Suite 10, Concord, NH 03301-2429

**DRAFT**

**APPLICATION FORM FOR**

## RENEWABLE ENERGY SOURCE ELIGIBILITY FOR CLASS I THERMAL SOURCES WITH RENEWABLE THERMAL ENERGY CAPACITY GREATER THAN 150,000 BTU/HR

*Pursuant to New Hampshire Administrative Code PUC 2500 Rules*

- Please submit one (1) original and two (2) paper copies of the completed application and cover letter* to:

  Debra A. Howland
  Executive Director
  New Hampshire Public Utilities Commission
  21 South Fruit Street, Suite 10
  Concord, NH 03301-2429

- Send an electronic version of the completed application and the cover letter electronically to executive.director@puc.nh.gov.

* The cover letter must include complete contact information and identify the renewable energy class for which the applicant seeks eligibility. Pursuant to PUC 2505.01, the Commission is required to render a decision on an application within 45 days of receiving a completed application.

If you have any questions please contact Barbara Bernstein at (603) 271-6011 or Barbara.Bernstein@puc.nh.gov.

**Only facilities that began operation after January 1, 2013 are eligible.**

Is this facility part of a Commission approved aggregation?

Yes ____ No X

Aggregator's Company Name: _____

Aggregator Contact Information: _____

# Contents

Part 1. General Application Information ..... 3
Part 2. Technology Specific Data ..... 4
Part 3. Metering and Measurement of Thermal Energy and REC Calculations ..... 5
Part 4. Affidavits ..... 8
Application Checklist ..... 9
Appendix A. Excerpt from Puc 2500 – Certain Thermal Metering Provisions ..... 10

# Attachment Labeling Instructions

**Please label all attachments by Part and Question number to which they apply (e.g. Part 3-7). For electronic submission, name each attachment file using the Owner Name and Part and Question number (e.g. Pearson Part 3-7).**

# Part 1. General Application Information

Please provide the following information:

## Applicant

Name: NEO Geothermal, LLC

Mailing Address: 1 New Hampshire Avenue, Suite 207

Town/City: Portsmouth State: NH Zip Code: 03801

Primary Contact: William Rodgers

Telephone: 603-766-8747 Cell: 603-682-2134

Email Address: brodgers@baycorpholdings.com

## Facility

Name: 233 Vaughan Street Condominums

Physical Address: 233 Vaughan Street

Town/City: Portsmouth State: NH Zip Code: 03801

If the facility does not have a physical address, the Latitude: _____ & Longitude _____

## Installer

Name: East Coast HVAC

Installer License Number: GF0905822

Mailing Address: 436 Shattuck Way

Town/City: Newington State: NH Zip Code: 03801

Primary Contact: Peter Robitaille

Telephone: 603-430-9414 Cell: _____

Email Address: peter@eastcoasthvac.com

If the equipment was installed by the facility owner, check here: ☐

## Facility Operator

If the facility operator is different from the owner, please provide the following:

Name: NEO Geothermal, LLC

Facility Operator Telephone Number: 603-294-4850

## Independent Monitor

Name: Ground Energy Support LLC

Mailing Address: 9 Madbury Road, Suite 402

Town/City: Durham State: NH Zip Code: 03824

Primary Contact: Matt Davis

Telephone: 603-867-9762 Cell:

Email Address: mdavis@groundenergysupport.com

## NEPOOL/GIS Asset ID and Facility Code

***In order to qualify your facility's thermal energy production for RECs, you must register with the NEPOOL – GIS. Contact information for the GIS administrator follows:***

**James Webb**
**Registry Administrator, APX Environmental Markets**
224 Airport Parkway, Suite 600, San Jose, CA 95110
Office: 408.517.2174
jwebb@apx.com

Mr. Webb will assist you in obtaining a GIS facility code and an ISO-New England asset ID number.

GIS Facility Code # NON62142 Asset ID #

1. Has the facility been certified under another non-federal jurisdiction's renewable portfolio standards?

Yes [ ] No [X]

If you selected yes, *please provide proof of certification in the form of an attached document as Attachment 1-1.*

*2. Attach any supplementary documentation that will help in classification of the facility as Attachment 1-9*

# Part 2. Technology Specific Data

## All Technologies

Fuel type (solar, geothermal, or biomass): Geothermal

Rated Thermal Capacity (Btu/hr): 642,000

Date of initial operation using renewable fuels: November 1, 2015

## Biomass

If a thermal biomass facility, provide proof of New Hampshire Department of Environmental Services approval that the facility meets the emissions requirements set forth in Puc 2500, as Attachment 2-1.

## Solar Thermal

If a solar thermal facility, please provide the Solar Rating and Certification Corporation rating based on Mildly Cloudy C (kBtu/day): _____

## Geothermal

If a geothermal facility, please provide the following:

The coefficient of performance (COP): See Attachment 2-1

The energy efficiency ratio of the system: See Attachement 2-1

# Part 3. Metering and Measurement of Thermal Energy and REC Calculations

This section deals with the thermal metering system including methods for calculation and reporting useful thermal energy. **A copy of PUC 2506.04 of the RPS rules is included as Appendix A.**

Using the table below, identify the thermal metering system or custom components (e.g., heat meters, flow meters, pressure and temperature sensors) used to measure the useful thermal energy and enter the accuracy of measurement for the entire system:

| System or Component | Product name | Product Manufacturer | Model No. |
|---|---|---|---|
| Temperature /Calc | BTU Meter | Onicon | System 10 |
| Flow sensor | Insertion Flow Sensor | Onicon | F-1100 |
| | | | |
| | | | |
| Total System Accuracy (Percent) | Meets EN1434 Accuracy Requirements | | |

*Attach component specification sheets (Accuracy, Operating Ranges) as Attachment 3-1.* X

*Attach a simple schematic identifying the location of each sensor that is part of the metering system as Attachment 3-2.* X

Check the applicable standard for meter accuracy prescribed in Puc 2506.04 among the six choices below (compliance with Puc 2506.04 shall be certified by a professional engineer licensed by the state of New Hampshire and in good standing):

*If the facility is a large thermal source using a liquid or air based system, check the method that applies:*

A. Installation and use of heat meters capable of meeting the accuracy provisions of European Standard EN 1434 published by CEN, the European Committee for Standardization. The heat meter shall have the highest Class flow meter that will cover the design flow range at the point of measurement and a temperature sensor pair of Class 5K or lower. [X]

B. Installation and use of meters that do not comply with European Standard EN 1434, provided that the manufacturers' guaranteed accuracy of the meters is ±5.0% or better, [ ]

C. Use of an alternative metering method approved pursuant to Puc 2506.06. [ ]

*If the facility is a large thermal source using a steam-based system, check the method that applies:*

D. Installation and use of meters with accuracy of ±3.0% or better. [ ]

E. Installation and use of meters with system accuracy that do not meet D but are ±5% or better. [ ]

F. Use of an alternative metering method approved pursuant to Puc 2506.06. [ ]

Please summarize the manufacturer's recommended methods and frequency for metering system calibration and provide reference for source document (e.g. owners/operators manual):

Manufacturer recommends annual calibration of flow and temperature sensors.

REC Calculation Discount factor for meter accuracy (Enter 0 if no discount is required): 0 %

If the meters used to measure useful thermal energy comply with the accuracy of the European Standard EN 1434 for liquid systems or use of meters with accuracy of ±3.0% or better for steam systems enter zero, for all other systems enter the sum total of the manufacturer's guaranteed accuracy of the meters used or the accuracy of the alternative method approved pursuant to Puc 2506.06.

REC Calculation Discount factor for operating energy and thermal energy losses: 3.6 %

*Check the method used for determining the operating energy and thermal loss factor among the choices below:*

**Default Factor** [X]

- For sources using solar thermal technology, the discount factor shall be 3.0% of the useful thermal energy produced;
- For sources using geothermal technology, the discount factor shall be 3.6% of the useful thermal energy produced;
- For sources using thermal biomass renewable energy technology, the discount factor shall be

2.0% of the useful thermal energy produced.

**Actual Metering**

- Include a simple schematic identifying the operating energy and thermal energy losses and placement of the meters.

## Interim Alternative Metering Method

Until such time as the Puc 2500 rule is finalized applicants may utilize an alternative method as described in the draft rule 2505.02(e)(2):

> *In lieu of the information required by Puc 2505.02 (d) (11) through (13), a thermal source may submit a detailed explanation of the methodology used to measure and calculate thermal energy and an attestation by a professional engineer that is licensed in New Hampshire and in good standing that the methodology for measuring useful thermal energy and calculating certificates is sound.*

## Part 4. Affidavits

### Owners Affidavit

The following affidavit must be completed by the owner attesting to the accuracy of the contents of the application pursuant to PUC 2505.02 (b) (14).

AFFIDAVIT

I, Anthony M. Callendrello have reviewed the contents of this application and attest that it is accurate and is signed under the pains and penalties of perjury.

Applicant's Signature _____ Date 1/22/2016

Applicant's Printed Name Anthony M. Callendrello

Subscribed and sworn before me this 22nd Day of January (month) in the year 2016

County of Rockingham State of New Hampshire

Janet M Peters

Notary Public/Justice of the Peace Seal

My Commission Expires June 8, 2016

### NH Professional Engineer Affidavit

AFFIDAVIT

I, TIMOTHY M. ROOS attest that this facility meets the requirements of the thermal REC eligibility requirements of Puc 2500, including the thermal metering and measurement methodologies and standards and REC calculation methodologies.

Professional Engineer's Signature _____ Date 02/05/2016

Professional Engineer's Printed Name TIMOTHY M. ROOS

NH Professional Engineer License Number 13296

PE Stamp

STATE OF NEW HAMPSHIRE
TIMOTHY M. ROOS No. 13296 LICENSED
PROFESSIONAL ENGINEER

# Attachments

## Attachment 2-1:

The *DRAFT Application Form for Renewable Energy Source Eligibility for Class I Thermal Sources with Renewable Thermal Energy Capacity Greater Than 150,000 Btu/hr* obtained from the Puc website[1] requests, as part of Section 2, information on System COP and EER.

We cannot find anywhere in PUC 2500 where the COP or EER are required as part of the application or operation of a large geothermal system. COP is used only for computing thermal energy production for small systems.

Because the geothermal system at 233 Vaughan includes multiple heat pumps distributed throughout the building, we are unable to readily compute a system COP without further guidance from the Commission. Further, because the COP is not stipulated as being required in Puc 2500 for large geothermal systems, we assert that this information is 'not applicable'.

---

1 http://www.puc.state.nh.us/sustainable%20energy/Draft%20Large%20System%20Thermal%20Application%20ern%20bb%206-18-14%20%283%29.pdf

## Attachment 3-1: Specification sheets of meter components

The specification sheets for the Onicon System 10 and associated F-1100 Flow Meter are attached on the following pages.

This Attachment also explains why **the meter installed at 233 Vaughan complies with the accuracy requirements of EN 1434 as published by the CEN** as stipulated by Puc 2506.04(e)(1).

The installed temperature sensors have a ΔT accuracy of ±0.15 °F . A Class 5K Sensor is defined in EN 1434 as sensor pairs in which the temperature error ($E_T$) does not exceed ±3.5% when ΔT is 5°K (9°F). This then coincides with a temperature sensor pair whose error does not exceed ±0.175°K (±0.315°F). <u>The temperature sensor pair installed at 233 Vaughan has an accuracy of ±0.15°F and therefore meets the accuracy requirement of a Class 5K sensor</u>.

The installed flow sensor (Onicon F-1100) has an accuracy of ±2% over the operating range of 0.41 to 20 ft/s. In a 4" steel pipe, these velocities correspond to an operating range from 16 to 800 gpm (see attached document from manufacturer). The design flow rate at 233 Vaughan is 135 gpm. However with the variable speed drives, the flow may range from 20 to 250 gpm, a range that falls well within the range at which the F-1100 maintains 2% accuracy. EN-1434 stipulates that for a Class 3 flow meter, the value computed from the equation below not exceed the 5% .

$$E_f = \pm\left(3 + 0.05\, {}^{q_p}/_{q}\right)\%$$

Where $q_p$ is the maximum flow and q is the measured flow. $E_f$ will have a maximum value when $q$ is equal to the minimum flow, $q_m$. <u>For 233 Vaughan, $E_f$ will have a maximum value of 3.65%. Because $E_f$ does not exceed 5%, the flow meter installed meets the EN 1434 Class 3 flow meter accuracy requirement and the Puc 2506.04(e)(1) requirement for the highest class flow meter that will cover the design flow range.</u>

# ONICON Solid State Temperature Sensor

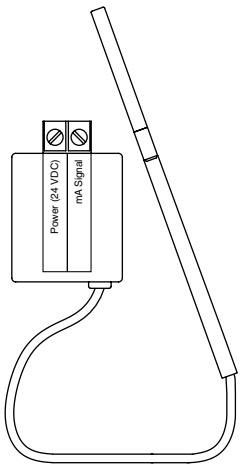


## DESCRIPTION

ONICON solid-state temperature sensors are specifically designed to provide the high degree of accuracy and reliability required for difficult energy measurement and cost allocation applications. Individual sensors provide a linear current output that is proportional to temperatures ranging from 25˚ to 200˚ Fahrenheit. When provided as matched pairs with ONICON BTU measurement systems, the measured differential temperature is accurate to within ±0.15˚ F. This includes the errors from individual temperature sensors, sensor matching, input offsets and sensor signal conditioning.

ONICON temperature sensors provide a current output of 100 µA per degree Fahrenheit. By using a current driven output, the accuracy of ONICON temperature sensors are unaffected by lead length and will operate with leads up to 1000 feet in length.

## APPLICATIONS

Hydronic supply and return temperature measurement for ONICON BTU measurement systems

## GENERAL SPECIFICATIONS

**ACCURACY**

Differential temperature accuracy, ±0.15˚ Fahrenheit over calibrated range

**SENSING METHOD**

Monolithic semiconductor temperature sensor

**TEMPERATURE RANGE**

25˚ to 200˚ Fahrenheit

**OUTPUT SIGNAL**

Current output of 100 µA per degree Fahrenheit

## CALIBRATION

Each sensor is calibrated using N.I.S.T. traceable calibration standards

Matched pairs selected for a differential accuracy of better than ±0.15˚ Fahrenheit over calibrated range

## FEATURES

**Unmatched Differential Temperature Accuracy -** Each matched pair of ONICON temperature sensors is selected based on their maximum differential accuracy. Differential temperature accuracy exceeds ±0.15˚ Fahrenheit over calibrated range.

**N.I.S.T. Traceable Calibration -** Each temperature sensor is tested for absolute accuracy using N.I.S.T. traceable calibration standards. Matched pairs are tested for maximum differential accuracy.

**Outstanding Reliability -** Sensor output circuitry includes fault protection to guard against damage due to accidental miswires. Epoxy encapsulation protects both the temperature sensor and electronics package in hostile environments.

**Current Based Signal -** Provides an accurate output that is unaffected by lead lengths up to 1000 feet using 22ga twisted shielded pair cable.

### STANDARD TEMPERATURE SENSOR ASSEMBLY

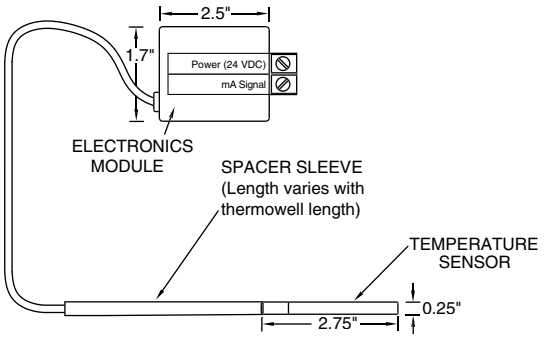


### STANDARD THERMOWELL DETAIL

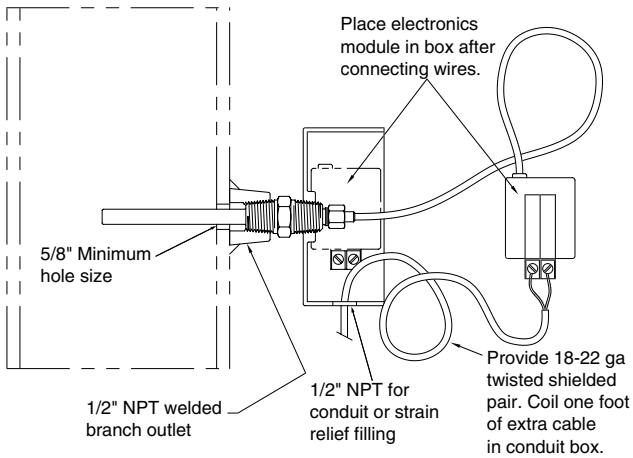


*1500 North Belcher Road, Clearwater, Florida 33765 Tel (727) 447-6140 Fax (727) 447-6140*
*www.onicon.com e-mail: sales@onicon.com*

# BTU METER
# CERTIFICATE OF CALIBRATION

ONICON INCORPORATED

## METER INFORMATION

Meter Tag: Geo Loop Return
BTU Meter Model: SYSTEM-10-MODBUS_RTU
Serial No: 293896
Attached Flow Meter Model: F-1100
Serial No: 293896

## SPECIFIED INSTALLATION & OPERATING PARAMETERS

Pipe Information: 4 Inch Schedule 40 Carbon Steel
Design Maximum Flow Rate: 160.0 GPM
Design Supply Temperature: MODE 1: 25°F
Design Return Temperature: MODE 1: 20°F
Fluid: 20% Propylene Glycol
Fluid Specific Heat: 0.937 BTU/lb°F
Fluid Density: 64.21 lb/ft³

## CONFIGURATION DATA

Enclosure Type: NEMA 13
Input Supply Voltage: 120 AC
Thermowell Type:

## CALIBRATION DATA

Firmware Version: DDM3.3
Communications Protocol: MODBUS_RTU
Device Network Address: 1
Flow Meter MCU Code: 13.690
Display Units & Multipliers:
Energy Total: BTU x 10K — Energy Rate: BTU/HR x 1K
Flow Total: GAL x 100 — Flow Rate: GPM x 1
Temperature: °F
Damping: 5
Pipe I.D.: 4.026 Inch
Pulse Duration: 500 ms
Supply Temperature Slope: 9.930 — Offset: -0.290
Return Temperature Slope: 9.939 — Offset: -0.250
Flow Diagnostic Test Output (60 Hz): 162 GPM

## OUTPUT SIGNAL SCALING

Energy Total(s): 1 Pulse = BTU x 10K
Flow Rate: NA
Energy Rate: NA
Supply T: NA
Return T: NA
Delta T: NA

Calibrated By: Dan Stevenson

Date: 11/20/2014

ONICON Incorporated certifies that the flow and temperature sensors provided with this Btu meter have been individually calibrated based on the application specific data provided above; using standards directly traceable to the U.S. National Institute of Standards and Technology (N.I.S.T.).

*11451 Belcher Road South, Largo, Florida 33773 Tel (727) 447-6140 Fax (727) 442-5699*

# • F-1100 SINGLE TURBINE •
## INSERTION FLOW METER
## FREQUENCY OUTPUT

ONICON INCORPORATED

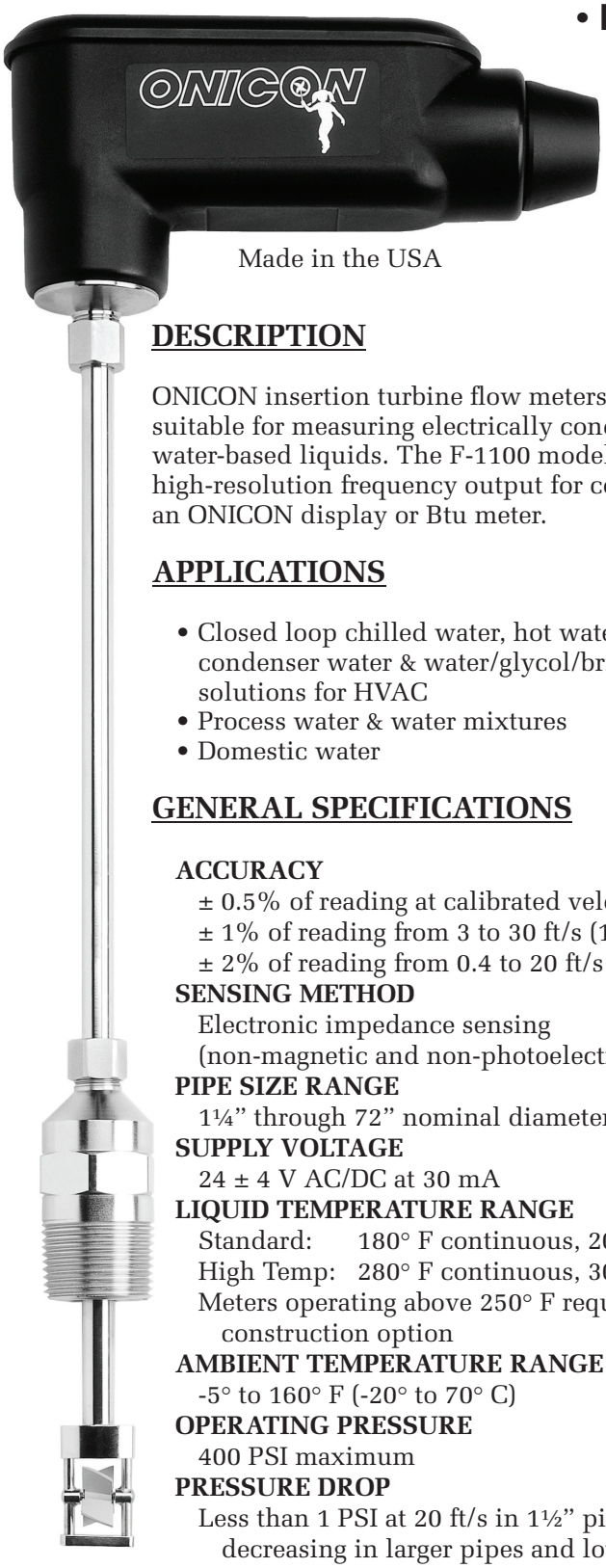


Made in the USA

## DESCRIPTION

ONICON insertion turbine flow meters are suitable for measuring electrically conductive water-based liquids. The F-1100 model provides a high-resolution frequency output for connection to an ONICON display or Btu meter.

## APPLICATIONS

- Closed loop chilled water, hot water, condenser water & water/glycol/brine solutions for HVAC
- Process water & water mixtures
- Domestic water

## GENERAL SPECIFICATIONS

**ACCURACY**
± 0.5% of reading at calibrated velocity
± 1% of reading from 3 to 30 ft/s (10:1 range)
± 2% of reading from 0.4 to 20 ft/s (50:1 range)

**SENSING METHOD**
Electronic impedance sensing (non-magnetic and non-photoelectric)

**PIPE SIZE RANGE**
1¼" through 72" nominal diameter

**SUPPLY VOLTAGE**
24 ± 4 V AC/DC at 30 mA

**LIQUID TEMPERATURE RANGE**
Standard: 180° F continuous, 200° F peak
High Temp: 280° F continuous, 300° F peak
Meters operating above 250° F require 316 SS construction option

**AMBIENT TEMPERATURE RANGE**
-5° to 160° F (-20° to 70° C)

**OPERATING PRESSURE**
400 PSI maximum

**PRESSURE DROP**
Less than 1 PSI at 20 ft/s in 1½" pipe, decreasing in larger pipes and lower velocities

**OUTPUT SIGNALS PROVIDED**
Frequency Output
0 – 15 V peak pulse, typically less than 300 Hz

(continued on back)

## CALIBRATION

Every ONICON flow meter is wet calibrated in our flow laboratory against primary volumetric standards that are directly traceable to N.I.S.T. A certificate of calibration accompanies every meter.

## FEATURES

**Unmatched Price vs. Performance -** Custom calibrated, highly accurate instrumentation at very competitive prices.

**Excellent Long-term Reliability -** Patented electronic sensing is resistant to scale and particulate matter. Low mass turbines with engineered jewel bearing systems provide a mechanical system that virtually does not wear.

**Industry Leading Two-year "No-fault" Warranty -** Reduces start-up costs with extended coverage to include accidental installation damage (miswiring, etc.) Certain exclusions apply. See our complete warranty statement for details.

**Simplified Hot Tap Insertion Design -** Standard on every insertion flow meter. Allows for insertion and removal by hand without system shutdown.

**OPERATING RANGE FOR COMMOM PIPE SIZES 0.17 TO 20 ft/s**

±2% accuracy begins at 0.4 ft/s

| Pipe Size (Inches) | Flow Rate (GPM) |
|---|---|
| 1 ¼ | 0.8 - 95 |
| 1 ½ | 1 - 130 |
| 2 | 2 - 210 |
| 2 ½ | 2.5 - 230 |
| 3 | 4 - 460 |
| 4 | 8 - 800 |
| 6 | 15 - 1,800 |
| 8 | 26 - 3,100 |
| 10 | 42 - 4,900 |
| 12 | 60 - 7,050 |
| 14 | 72 - 8,600 |
| 16 | 98 - 11,400 |
| 18 | 120 - 14,600 |
| 20 | 150 - 18,100 |
| 24 | 230 - 26,500 |
| 30 | 360 - 41,900 |
| 36 | 510 - 60,900 |

*1500 North Belcher Road, Clearwater, FL 33765 • Tel (727) 447-6140 • Fax (727) 442-5699*
*www.onicon.com • sales@onicon.com*

## F-1100 SPECIFICATIONS cont.

**MATERIAL**

Wetted metal components:

Standard: Electroless nickel plated brass

Optional: 316 stainless steel

**ELECTRONICS ENCLOSURE**

Standard: Weathertight aluminum enclosure

Optional: Submersible enclosure

**ELECTRICAL CONNECTIONS**

3-wire for frequency output

Standard: 10' of cable with ½" NPT conduit connection

Optional: Indoor DIN connector with 10' of plenum rated cable

## ALSO AVAILABLE

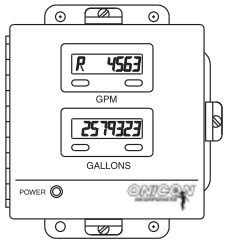


Display Modules

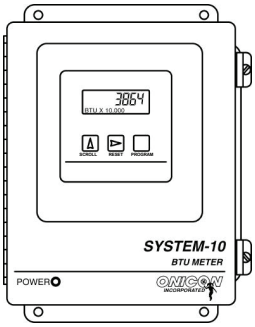


Btu Measurement Systems

## F-1100 Wiring Information

| WIRE COLOR | DESCRIPTION | NOTES |
|---|---|---|
| RED | (+) 24 V AC/DC supply voltage, 30 mA | Connect to power supply positive |
| BLACK | (-) Common ground (Common with pipe ground) | Connect to power supply negative |
| GREEN | (+) Frequency output signal: 0-15 V peak pulse | Signal for ONICON display or Btu meter |

## F-1100 Wiring Diagram

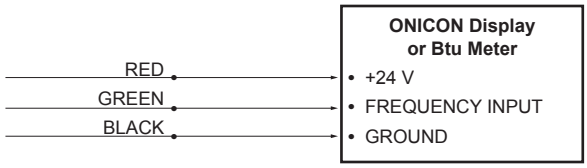


***NOTE: Black wire is common with the pipe ground (typically earth ground).***

## Typical Meter Installation

**(New construction or scheduled shutdown)**

- Acceptable to install in vertical pipe
- Position meter anywhere in upper 240° for horizontal pipe

Horizontal Run Pipe

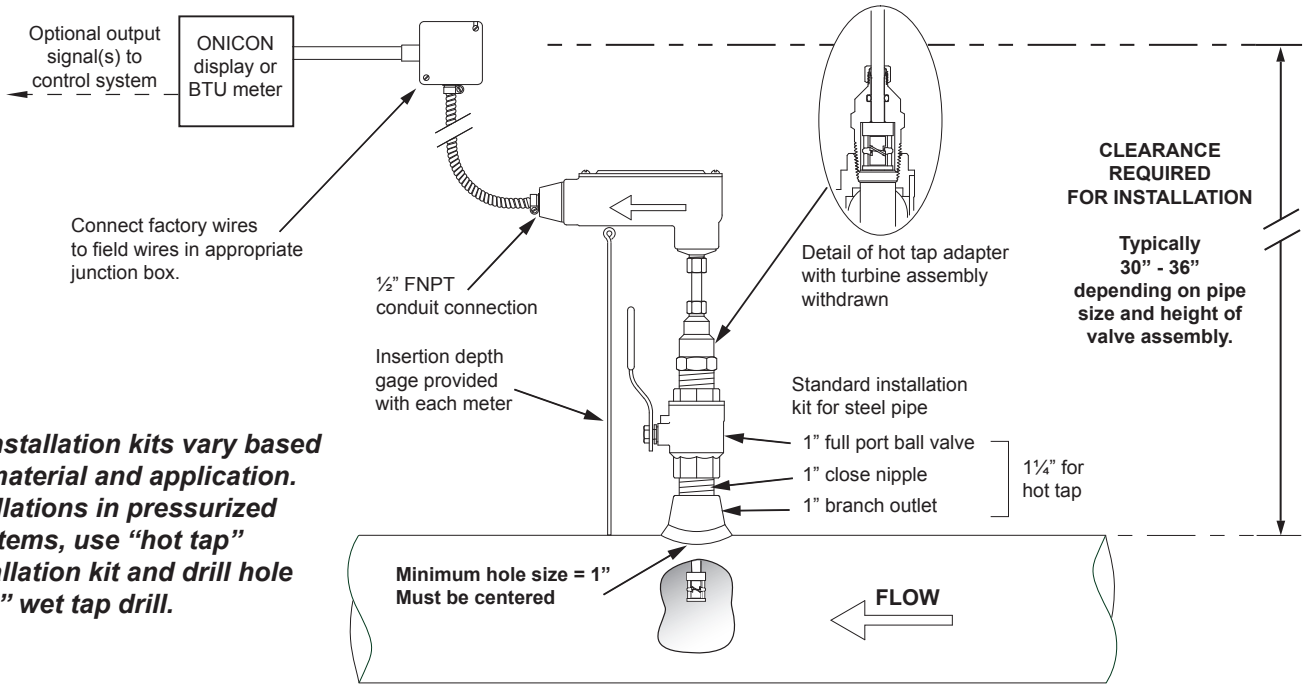


***NOTE: Installation kits vary based on pipe material and application. For installations in pressurized (live) systems, use "hot tap" 1¼" installation kit and drill hole using a 1" wet tap drill.***


***1500 North Belcher Road, Clearwater, FL 33765 • Tel (727) 447-6140 • Fax (727) 442-5699***

***www.onicon.com • sales@onicon.com***

# MECHANICAL INSTALLATION LAYOUT
## Series F-1100 Single Turbine Flow Meters

ONICON INCORPORATED

Insert meter at any angle to the run pipe in upper ½ of pipe. (Meter must always be perpendicular to the pipe)

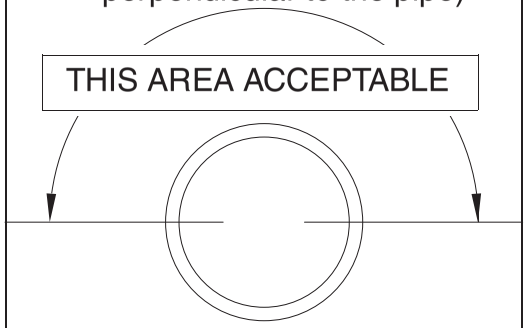


Horizontal Run Pipe

Installation in vertical run pipes is also acceptable (Meter must always be perpendicular to the pipe)

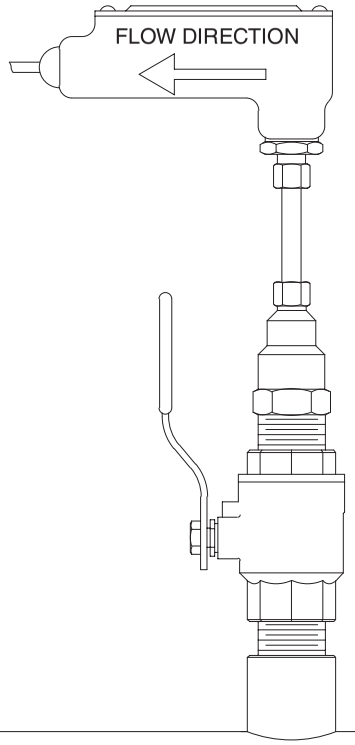


### GENERAL PRACTICES

1) For best results, install the flow meter in a straight run of pipe, free of bends, tees, valves, transitions, and obstructions, for a distance of 20 pipe diameters upstream and 5 diameters downstream.

2) Longer straight runs may be required in applications where the meter is placed downstream from devices which cause unusual flow profile disruption or swirl, for example, modulating valves or two elbows in close proximity and out of plane, etc.

3) If there is insufficient straight run, allow 80% of the run upstream and 20% of the run downstream. If the total length of straight run is less than 20 diameters, performance may seriously degrade, and consideration should be given to changing to the series F-1200 Dual Turbine flow meter.

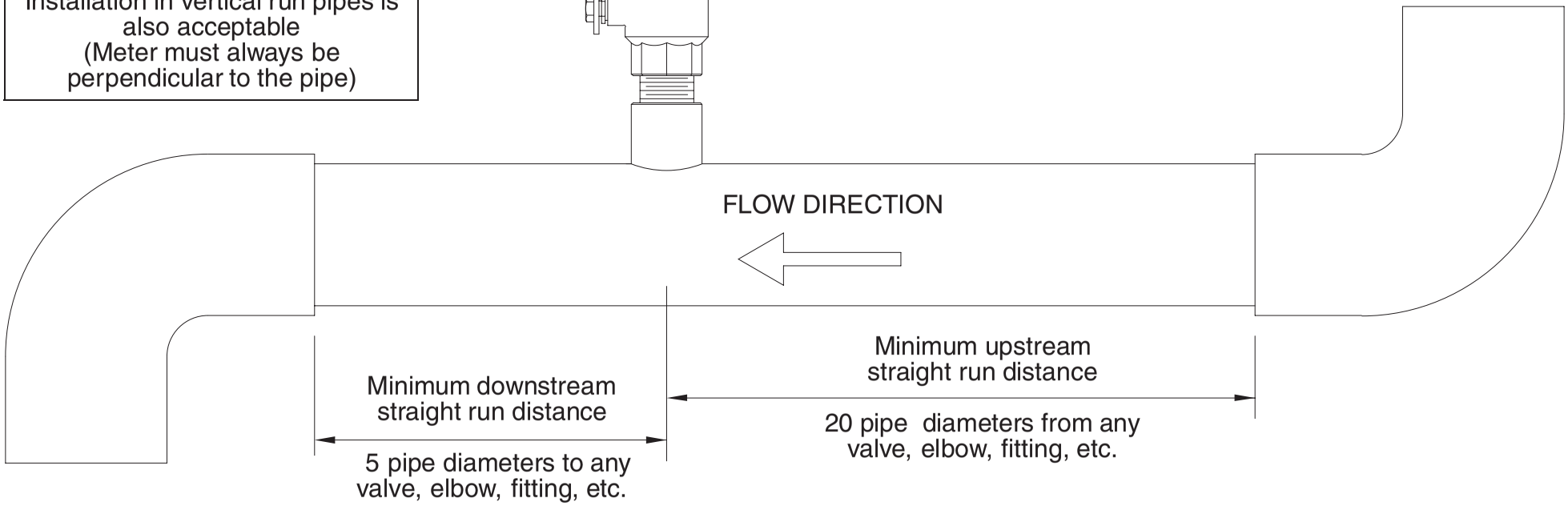


Attachment 3-2b

*1500 North Belcher Road, Clearwater, Florida 33765 Tel (727) 447-6140 Fax (727) 442-5699*
*www.onicon.com E-mail: sales@onicon.com*

# FLOW METER
# CERTIFICATE OF CALIBRATION

ONICON INCORPORATED

**CALIBRATION, INSTALLATION & CONFIGURATION DATA for FREQUENCY OUTPUT FLOW METERS**
**Model F-1100 Serial No 293896**

## INSTALLATION DATA

Flow Meter Length: **16.000"**

Gage Length: **12.563"**

Overall Length: **18.250"**

## CONFIGURATION DATA

Wetted Metal Components: **Brass**

Temperature: **Standard**

Type of Enclosure: **Weather Tight**

Peripheral Equipment: **SYSTEM-10**
**S/N 293896**

Meter Tag Information: **Geo Loop Return**

## CALIBRATION DATA

Model: **F-1100** Serial No: **293896**

Pipe Size: **4"** Pipe Type: **Schedule 40 Carbon Steel**

MCU Code: **13.690**

Frequency Output Meter Factor: **22.24 Pulses Per Gallon**

Typical Flow Rate: **80 GPM**

Calibrated By: Gary L. Auffarth Date: **11/18/2014**

**ONICON Incorporated certifies that this flow meter was calibrated against a primary standard accurate to *within 0.1% and traceable to the* U.S. National Institute Of Standards And Technology (NIST).**

*11451 Belcher Road South, Largo, Florida 33773 Tel (727) 447-6140 Fax (727) 442-5699*

## Attachment 3-2: Placement of Sensors

PUC 2506.04(l)(8) states: Meter sensors shall be installed on the ground loop as close to the ground loop inlet and outlet as practical and in accordance with the manufacturer's recommendation.

The placement of sensors is shown below and is in accordance with the requirements stated above.

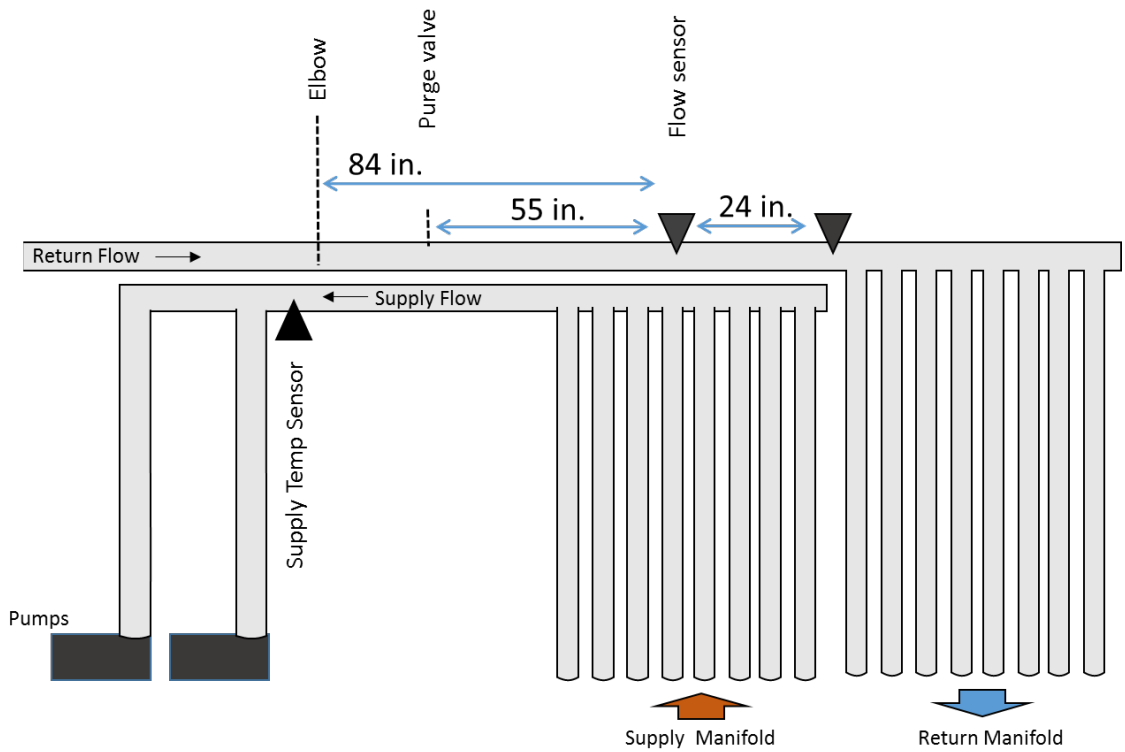

# TECH-NOTES

## ONICON TURBINE FLOW METERS
### F-1100/F-1200/F-1300/FB-1200 Series

### MAINTENANCE AND CALIBRATION DISCUSSION

Maintenance - Wear

The electronic impedance sensing system allows the use of low mass, non-metallic turbines, which generate very small bearing loads. The turbines are supported with separate axial and radial industrial grade sapphire jewel bearings running on tungsten carbide shafts. This configuration provides the low friction and resistance to abrasive particles necessary for long life.

A suggested interval for inspection and/or replacement of bearing components is dependent upon flow velocity, percentage of run time, and water quality. Based upon our experience with demanding 24-hour service HVAC recirculating loops, disassembly and visual inspection of the shaft/bearing interface after five years has proven to be a conservative approach to preventative maintenance.

Maintenance - Cleaning

Onicon turbine flow meters require very little maintenance in clean recirculating loops. The electronic impedance sensing system, which senses the rotation of the turbine, does not attract magnetic particles or iron oxide that can foul magnetically coupled meters. This sensing system also allows the meter to continue operating after considerable scale has formed.

Suggested cleaning intervals are dependent upon water quality and range from no cleaning required over a ten year interval in a clean recirculating loop to cleaning every six months in an unfiltered, untreated open loop. Typical clean HVAC and process applications require very little to no cleaning over a five year interval. Monitoring historical data will assist in determining the correct cleaning interval for each specific application.

Onicon provides a separate *TechNotes* document that directly addresses recommended cleaning procedures for customer cleaning of these turbine flow meters. Please contact Onicon for a copy of this document if you wish to clean these flow meters in the field. (Document Title is: *TechNotes – Flow Meter-Turbine Meter Cleaning and Maintenance-2010.pdf*)

*11451 Belcher Road South, Largo, FL 33773 Tel (727) 447-6140 Fax (727) 442-5699*
*www.onicon.com • service@onicon.com*

# TECH-NOTES

**Page 2:** **Turbine Flow Meter Maintenance And Calibration**

ONICON offers factory cleaning and recalibration service for all models of ONICON turbine flow meters at our Service Department in Clearwater Florida.

This service includes the following:

- Disassembly, cleaning and inspection of the meter's turbine assembly
- Replacement of turbines, bearings, shafts and o-rings.
- Inspection and testing of circuit boards and wiring
- Calibration in a volumetric flow loop calibration system which has been calibrated traceable to the National Institute of Standards and Technology. (N.I.S.T)
- A calibration certificate is provided which contains specific calibration data and states that the flow meter has been calibrated against an N.I.S.T traceable standard.
- Cost for this service is $115.00 per flow meter, plus shipping.

If you would like to ship the flow meter in for this service, please contact us at (727) 447-6140 to schedule the service and obtain a return order tracking (RO) number for the shipment.

Calibration

All Onicon Flow Meters are calibrated directly against primary volumetric standards that are accurate to within ±0.1% and directly traceable to NIST. The flow meter accuracy is better than ±0.5% of reading at the calibrated flow rate. The minimal wear characteristics of the turbine and bearing assembly ensure a constant calibration over time with excellent long term stability and minimal change in meter factor due to wear. Onicon flow meters typically maintain their calibrated meter factors within ±0.1% to ±1.5% of the original calibration during the first five years of operation.

Calibration intervals are determined by the organization responsible for the measurement and/or by the appropriate governing body (e.g. NIST, AWWA, etc.). Application, traceability requirements, and desired minimum performance level all play a role in determining the calibration interval. Onicon offers an excellent NIST traceable factory cleaning and recalibration service with 5-7 day turnaround for $115.00 per flow meter, plus shipping. Please contact the Onicon applications engineering department for suggested calibration intervals for your specific application.

*11451 Belcher Road South, Largo, FL 33773 Tel (727) 447-6140 Fax (727) 442-5699*
*www.onicon.com • service@onicon.com*

## Attachment 3-4. Description of the methodology used to calculate the useful thermal energy pursuant to Puc 2506.04(l);

As stipulated in Puc 2506.04(l), the heat generated in the ground loop will be calculated using the equation (definition of terms provided in Puc 2506.04(l)).

$$Q_g = (dm/dt) * c_p * (To - Ti) * t$$

The Onicon System 10 installed at the site was programmed and calibrated by the factory to compute the heat rate term ((dm/dt) * cp * (To –Ti)) in the equation above. To meet the requirements of Puc-2506.04 (c), meter readings will be taken every 15 minutes by use of an internet gateway device (Obvius Acquisuite 8810) that will report readings to a remote database. The heat rate term provided by the heat meter (in units of Btu/hr) will be multiplied by time interval between readings (in hours) to calculate thermal energy for that interval. Pursuant to Puc 2506.04(c), these values will be totaled for each 24 hour period, each month, and each quarter.