DE 14-296

YEATON ASSOCIATES, INC.

NHPUC 8SEP'15PM2:05

September 1, 2015

State of New Hampshire
Public Utilities Commission
21 S. Fruit St, Suite 10
Concord, NH 03301-2429

Attn: Ms. Debra Howland, Executive Director

Re: Application Renewable energy Source Eligibility

Dear Ms. Howland:

On December 5, 2014, the New Hampshire Public Utilities Commission granted (DE 14-296) interim certification for Androscoggin Valley Hospital (AVH), thermal biomass facility as a Class I Thermal renewable energy source, effective as of March 21, 2014.

On March 3, 2015, the Commission received an application for permanent certification of Androscoggin Valley Hospital. In this application, it was noted that the facility did not have installed a metering system that satisfied the requirements of Puc 2506.04. Instead, AVH was applying for certification under section 2506.06. On April 7, 2015, the commission responded with a request for clarification.

On May 12, 2015, the Commission granted a waiver of Puc 2506.04 for the Androscoggin Valley Hospital thermal biomass facility to continue to generate RECs as a Class I Thermal renewable energy source. The waiver extends to September 12, 2015, before which Androscoggin Valley Hospital must complete the following:

- Installation of the meters necessary to meet the requirements of Puc 2506.04;
- Submittal of an application for final approval under Puc 2506.04.

Enclosed is an Application for Final Approval under Puc 2506.04. The Application demonstrates compliance with the conditions of the Waiver. Also enclosed are two copies of this cover letter, and two copies of Application and all Attachments.

Please let me know if you have any questions or need additional information.

Respectfully,

Wayne G. Fillion, P.E.
President

Enclosure

State of New Hampshire
Public Utilities Commission

21 S. Fruit Street, Suite 10, Concord, NH 03301-2429

DRAFT

APPLICATION FORM FOR

RENEWABLE ENERGY SOURCE ELIGIBILITY FOR CLASS I THERMAL SOURCES WITH RENEWABLE THERMAL ENERGY CAPACITY GREATER THAN 150,000 BTU/HR

Pursuant to New Hampshire Administrative Code PUC 2500 Rules

- Please submit one (1) original and two (2) paper copies of the completed application and cover letter* to:

  Debra A. Howland
  Executive Director
  New Hampshire Public Utilities Commission
  21 South Fruit Street, Suite 10
  Concord, NH 03301-2429

- Send an electronic version of the completed application and the cover letter electronically to executive.director@puc.nh.gov.

* The cover letter must include complete contact information and identify the renewable energy class for which the applicant seeks eligibility. Pursuant to PUC 2505.01, the Commission is required to render a decision on an application within 45 days of receiving a completed application.

If you have any questions please contact Barbara Bernstein at (603) 271-6011 or Barbara.Bernstein@puc.nh.gov.

Only facilities that began operation after January 1, 2013 are eligible.

Is this facility part of a Commission approved aggregation?

Yes ____ No __x__

Aggregator's Company Name: _____

Aggregator Contact Information: _____

Contents

Part 1. General Application Information 3
Part 2. Technology Specific Data 4
Part 3. Metering and Measurement of Thermal Energy and REC Calculations 5
Part 4. Affidavits 8
Application Checklist 9
Appendix A. Excerpt from Puc 2500 – Certain Thermal Metering Provisions 10

Attachment Labeling Instructions

Please label all attachments by Part and Question number to which they apply (e.g. Part 3-7). For electronic submission, name each attachment file using the Owner Name and Part and Question number (e.g. Pearson Part 3-7).

The manufacturer of the boiler system, and the seller of the boiler system is:

Messersmith Manufacturing Inc.
2612 F Road
Bark River, MI 49807
Office (9906) 466-9010
Fax (906) 446-2843

Part 1. General Application Information

Please provide the following information:

Applicant

Name: Androscoggin Valley Hospital

Mailing Address: 59 Page Hill Road

Town/City: Berlin State: NH Zip Code: 03570

Primary Contact: Stephen McMann, Director of Facilities

Telephone: 603-326-5681 Cell:

Email Address: stephen.mcmann@avhnh.org

Facility

Name: Androscoggin Valley Hospital

Physical Address: 59 Page Hil Road

Town/City: Berlin State: NH Zip Code: 03570

If the facility does not have a physical address, the Latitude: _____ & Longitude _____

Installer

Name: Langford and Low, General Contractor

Installer License Number:

Mailing Address: 248 Warren Avenue

Town/City: Portland State: ME Zip Code: 04104

Primary Contact: Daniel Williams

Telephone: (207) 318-0442 Cell:

Email Address: projects@langfordandlow.com

If the equipment was installed by the facility owner, check here: ☐

Facility Operator

If the facility operator is different from the owner, please provide the following:

Name:

Facility Operator Telephone Number:

Independent Monitor

Name: Wayne G. Fillion

Mailing Address: 66 Jackson Street

Town/City: Littleton State: NH Zip Code: 03561

Primary Contact: David Kyle

Telephone: 603.444.6578 Cell:

Email Address: dkyle@yeatonassociates.com

NEPOOL/GIS Asset ID and Facility Code

In order to qualify your facility's thermal energy production for RECs, you must register with the NEPOOL – GIS. Contact information for the GIS administrator follows:

James Webb
Registry Administrator, APX Environmental Markets
224 Airport Parkway, Suite 600, San Jose, CA 95110
Office: 408.517.2174
jwebb@apx.com

Mr. Webb will assist you in obtaining a GIS facility code and an ISO-New England asset ID number.

GIS Facility Code # 15628 Asset ID # NON43842

1. Has the facility been certified under another non-federal jurisdiction's renewable portfolio standards?

Yes [ ] No [x]

If you selected yes, *please provide proof of certification in the form of an attached document as Attachment 1-1.*

2. Attach any supplementary documentation that will help in classification of the facility as Attachment 1-9

Part 2. Technology Specific Data

All Technologies

Fuel type (solar, geothermal, or biomass): biomass

Rated Thermal Capacity (Btu/hr): 8,368,750 Btu/hr (250 boiler horsepower)

Date of initial operation using renewable fuels: March 24, 2014

Biomass

If a thermal biomass facility, provide proof of New Hampshire Department of Environmental Services approval that the facility meets the emissions requirements set forth in Puc 2500, as Attachment 2-1.

Solar Thermal

If a solar thermal facility, please provide the Solar Rating and Certification Corporation rating based on Mildly Cloudy C (kBtu/day): _____

Geothermal

If a geothermal facility, please provide the following:

The coefficient of performance (COP): _____

The energy efficiency ratio of the system: _____

Part 3. Metering and Measurement of Thermal Energy and REC Calculations

This section deals with the thermal metering system including methods for calculation and reporting useful thermal energy. **A copy of PUC 2506.04 of the RPS rules is included as Appendix A.**

Using the table below, identify the thermal metering system or custom components (e.g., heat meters, flow meters, pressure and temperature sensors) used to measure the useful thermal energy and enter the accuracy of measurement for the entire system:

System or Component	Product name	Product Manufacturer	Model No.
Total System Accuracy (Percent)			

Please see this table at the start of Attachment 3.1

Attach component specification sheets (Accuracy, Operating Ranges) as Attachment 3-1. X

Attach a simple schematic identifying the location of each sensor that is part of the metering system as Attachment 3-2. X

Check the applicable standard for meter accuracy prescribed in Puc 2506.04 among the six choices below (compliance with Puc 2506.04 shall be certified by a professional engineer licensed by the state of New Hampshire and in good standing):

If the facility is a large thermal source using a liquid or air based system, check the method that applies:

A. Installation and use of heat meters capable of meeting the accuracy provisions of European Standard EN 1434 published by CEN, the European Committee for Standardization. The heat meter shall have the highest Class flow meter that will cover the design flow range at the point of measurement and a temperature sensor pair of Class 5K or lower. [ ]

B. Installation and use of meters that do not comply with European Standard EN 1434, provided that the manufacturers' guaranteed accuracy of the meters is ±5.0% or better, [ ]

C. Use of an alternative metering method approved pursuant to Puc 2506.06. [ ]

If the facility is a large thermal source using a steam-based system, check the method that applies:

D. Installation and use of meters with accuracy of ±3.0% or better. [x]

E. Installation and use of meters with system accuracy that do not meet D but are ±5% or better. [ ]

F. Use of an alternative metering method approved pursuant to Puc 2506.06. [ ]

Please summarize the manufacturer's recommended methods and frequency for metering system calibration and provide reference for source document (e.g. owners/operators manual):

Please see attached " Attachment 3-3 - Calibration Remarks"

REC Calculation Discount factor for meter accuracy (Enter 0 if no discount is required): 0 %

If the meters used to measure useful thermal energy comply with the accuracy of the European Standard EN 1434 for liquid systems or use of meters with accuracy of ±3.0% or better for steam systems enter zero, for all other systems enter the sum total of the manufacturer's guaranteed accuracy of the meters used or the accuracy of the alternative method approved pursuant to Puc 2506.06.

REC Calculation Discount factor for operating energy and thermal energy losses: 2.0 %

Check the method used for determining the operating energy and thermal loss factor among the choices below:

Default Factor 2.0

- For sources using solar thermal technology, the discount factor shall be 3.0% of the useful thermal energy produced;
- For sources using geothermal technology, the discount factor shall be 3.6% of the useful thermal energy produced;
- For sources using thermal biomass renewable energy technology, the discount factor shall be

2.0% of the useful thermal energy produced.

Actual Metering [ ]

- Include a simple schematic identifying the operating energy and thermal energy losses and placement of the meters.

Interim Alternative Metering Method

Until such time as the Puc 2500 rule is finalized applicants may utilize an alternative method as described in the draft rule 2505.02(e)(2):

> *In lieu of the information required by Puc 2505.02 (d) (11) through (13), a thermal source may submit a detailed explanation of the methodology used to measure and calculate thermal energy and an attestation by a professional engineer that is licensed in New Hampshire and in good standing that the methodology for measuring useful thermal energy and calculating certificates is sound.*

Please see attachment, "Attachment 3-4 - Interim Alternative Metering Method"

Part 4. Affidavits

Owners Affidavit

The following affidavit must be completed by the owner attesting to the accuracy of the contents of the application pursuant to PUC 2505.02 (b) (14).

AFFIDAVIT

I, STEPHEN McMANN have reviewed the contents of this application and attest that it is accurate and is signed under the pains and penalties of perjury.

Applicant's Signature Stephen McMann Date 9-2-15

Applicant's Printed Name STEPHEN McMANN

Subscribed and sworn before me this 2nd Day of September (month) in the year 2015

County of Coos State of New Hampshire

Darlene M. Blais

Notary Public/Justice of the Peace Seal

DARLENE M. BLAIS, Notary Public
My Commission Expires August 24, 2016

My Commission Expires

NH Professional Engineer Affidavit

AFFIDAVIT

I, WAYNE G. FILLION attest that this facility meets the requirements of the thermal REC eligibility requirements of Puc 2500, including the thermal metering and measurement methodologies and standards and REC calculation methodologies.

Professional Engineer's Signature Wayne G. Fillion Date 9-3-15

Professional Engineer's Printed Name WAYNE G. FILLION

NH Professional Engineer License Number #7427

PE Stamp

THE STATE OF NEW HAMPSHIRE
WAYNE G. FILLION NO. 7427
LICENSED
PROFESSIONAL ENGINEER

Attachment 2-1

New Hampshire Department of environmental Services Approval of Particulate Emissions Stack Test.

The State of New Hampshire
DEPARTMENT OF ENVIRONMENTAL SERVICES

Thomas S. Burack, Commissioner

July 14, 2014

Mr. Stephen McMann
Androscoggin Valley Hospital, Inc
59 Page Hill Road
Berlin, New Hampshire 03570

RE: Particulate Emissions Stack Test

Dear Mr. McMann:

The New Hampshire Department of Environmental Services, Air Resources Division ("DES") has reviewed the stack test report for Androscoggin Valley Hospital's Wood-Fired Boiler, submitted on June 26, 2014. The report presents the data and results of the testing conducted on June 4, 2014 by Gammie Air Monitoring, LLC.

DES finds the report to be technically acceptable and agrees that the test results show the measured particulate emissions from the boiler to be 0.067 pounds per million British thermal units (lbs/MMBtu). The results comply with the limit specified in 40 CFR Part 63 and Androscoggin Valley Hospital's Temporary Permit TP-0127. They are also within the threshold for eligibility to participate in the proposed New Hampshire Public Utilities Commission Renewable Portfolio Standards.

If you have any questions, please contact Claude Planchet of the Compliance Bureau's Testing and Monitoring Section, at (603) 271-1376.

Sincerely,

Raymond Walters
Compliance Measurement and Data Programs Manager
Compliance Bureau
Air Resources Division

RAW/cbp
PS# 14-38
cc: Source File

The State of New Hampshire

DEPARTMENT OF ENVIRONMENTAL SERVICES

Thomas S. Burack, Commissioner

July 14, 2014

Debra A. Howland
Executive Director and Secretary
New Hampshire Public Utilities Commission
21 South Fruit Street, Suite 10
Concord, NH 03301-2429

Re: Recommended Certification as a Class I Thermal Renewable Energy Source
Androscoggin Valley Hospital (AVH)
Berlin, NH

Dear Ms. Howland:

The New Hampshire Department of Environmental Services (DES) was contacted by Attorney Charles G. Willing, Jr. of Rath, Young and Pignatelli, P.C. on behalf of Androscoggin Valley Hospital (AVH) requesting certification of the wood-fired boilers located at AVH as a Class I thermal renewable energy source. DES recommends that the Public Utilities Commission (PUC) grant approval to AVH as a Class I thermal renewable energy source eligible to generate renewable energy certificates. A summary of the facility description, DES's review of particulate and NOx emission rates and monitoring requirements, and a recommendation for approval are presented below.

Facility Description

Facility Name: Androscoggin Valley Hospital (AVH)
Facility Location: 59 Page Hill Road
Berlin, NH 03570
Gross Nameplate Capacity: 11.16 MMBtu/hr
Temporary (construction) Permit: TP-0112
Primary Fuel: Whole-tree wood chips and other low-grade clean wood fuels

Particulate Matter (PM) Emissions

By definition, *"Thermal biomass renewable energy technologies"*, requires units rated between 3 and 30 MMBtu/hr gross heat input to meet a particulate matter (PM) emission rate limit of 0.10 pounds/million British thermal units (lb/MMBtu). Permit TP-0112 issued by DES contains pollution control equipment (electrostatic precipitator) operation and maintenance requirements (see Table 4, Item #6).

Emission Rate Confirmation

A PM emission test has been performed for AVH, and the test results have been reported in writing to DES. The emission test was performed for PM in accordance with the pre-test protocol reviewed by DES. The results of the emission test indicate the actual PM emission rate in lb/MMBtu meets the required 0.10 lb/MMBtu.

Nitrogen Oxides (NOx) Emissions

By definition, *"Thermal biomass renewable energy technologies"*, requires units rated less than 100 MMBtu/hr gross heat input to meet best management practices (BMP) as established by DES for control of nitrogen oxides (NOx) emissions. DES herein establishes BMP as conducting boiler tune-ups annually and conducting combustion efficiency testing initially and annually demonstrating results equal to or greater than 99%.

BMP Confirmation

AVH measured actual carbon monoxide (CO) and carbon dioxide (CO_2) concentrations in the exhaust gas using a hand-held portable analyzer (or alternative method approved by DES) to determine combustion efficiency using the following equation:

$CE(\%) = 100 \times CO_2 / (CO_2 + CO)$

Where:

CE = combustion efficiency

CO_2 = % by volume of carbon dioxide in the flue gas, and

CO = % by volume of carbon monoxide in the flue gas.

The results of the initial test indicate that the combustion efficiency meets the required 99%. DES anticipates that AVH will be able to meet ongoing BMP annually.

Conclusion and Recommendation for Approval

DES believes that AVH currently meets, and annually will meet, the requirements to be certified as a Class I - New Biomass thermal renewable energy source. DES recommends that the PUC certify AVH as a Class I thermal renewable energy source eligible to generate thermal renewable energy certificates, because AVH has demonstrated that the following conditions have been met:

1) AVH emits PM at an average rate less than or equal to 0.10 lb/MMBtu; and
2) AVH currently maintains CE equal to or greater than 99%.

If you have any questions, please contact me at joseph.fontaine@des.nh.gov or (603) 271-6794.

Sincerely

Joseph T. Fontaine
Trading Programs Manager
Air Resources Division

cc: Barbara Bernstein, PUC

Attachment 3-1

Thermal Metering System Component Specifications

1. Table of Components
2. Steam Mass Flowmeter
3. Feedwater Pressure Sensor
4. Feedwater Temperature Sensor
5. Supply Steam Pressure Sensor
6. Supply Steam Temperature Sensor

System Component	Product Name	Manufacturer	Model Number/ meter size	Manufacturer's Guarenteed Component Accuracy
Steam Mass Flow Meter	Rosemount 8800D Series Vortex Flowmeter	Rosemount	8800DR030SA1	± 2.48% of rate
Feedwater Pressure Sensor	Kele PSS2-150-G	Kele	Kele PSS2-150-G	1.0% of range (150 psi) = ±1.5 psi. = 2.3% of 65 psi (typical)
Feedwater Temperature Sensor	Series 2000 Electronic Temperature Sensors	Honeywell	C7031D2003/U	0.36°F at 77°F
Supply Steam Pressure Sensor	Ashcroft A2X-B-M02-42	Ashcroft	Ashcroft A2X-B-M02-42	0.50% of Span / <2.0% Temp effects
Supply Steam Temperature Sensor	Series 2000 Electronic Temperature Sensors	Honeywell	C7031D2003/U	0.36°F at 77°F
Notes: Temperature sensors arre new since Provisional Application.				

Rosemount 8800D Series Vortex Flowmeter

HART® AND FOUNDATION™ FIELDBUS PROTOCOLS

- *Available with optional MultiVariable output and temperature compensated mass flow for saturated steam.*
- *Available in wafer, flanged, dual, reducer and high pressure designs.*
- *Available in Reducer™ Vortex which extends the measurable flow range, reduces installation costs, and minimizes project risk.*
- *All-welded, non-clog design eliminates ports and gaskets.*
- *Adaptive Digital Signal Processing (ADSP) provides vibration immunity and the ability to optimize the measurable flow range.*
- *With the unique isolated sensor design, the CriticalProcess™ Vortex allows for replacement without breaking the process seal.*
- *Simplified troubleshooting through device diagnostics and meter verification.*

PART # 8800DR030SA1

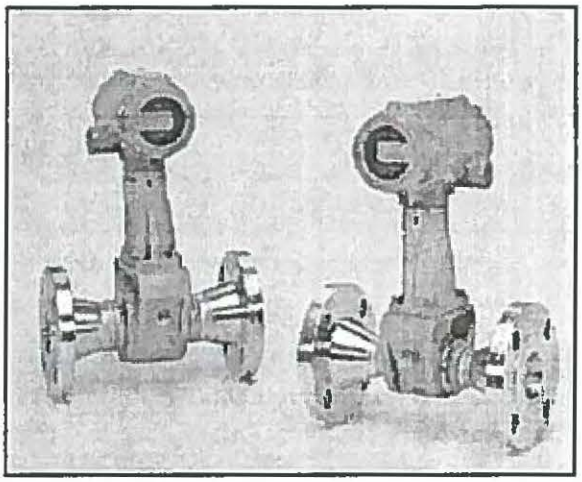

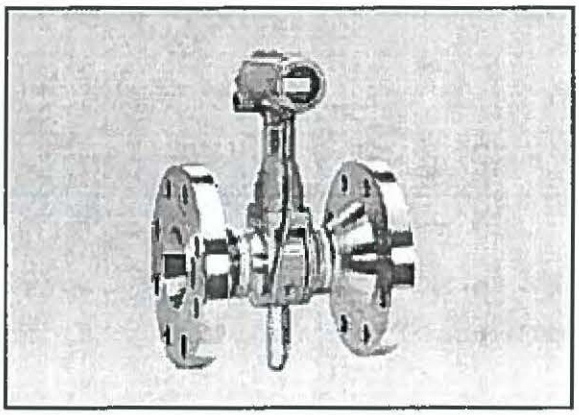

HART FOUNDATION CE

Contents

Specifications ..... page 6
Typical Flow Ranges ..... page 11
Product Certifications ..... page 22
Dimensional Drawings ..... page 28
Ordering Information ..... page 44

THE ROSEMOUNT 8800D DELIVERS RELIABILITY

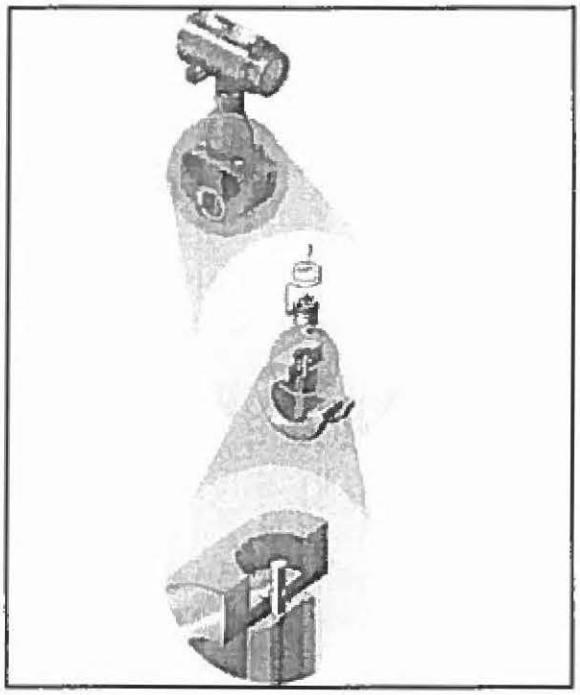

- **Rosemount Reliability** -The 8800D Vortex eliminates impulse lines, ports, and gaskets to improve reliability.
- **Non-clog Design** - Unique gasket-free construction which has no ports that can clog.
- **Vibration Immunity** - Mass Balancing of the sensor system, and Adaptive Digital Signal Processing (ADSP) provide Vibration immunity.
- **Replaceable Sensor** - The sensor is isolated from the process and can be replaced without breaking the process seals. All line sizes use the same sensor design allowing a single spare to serve every meter. The CriticalProcess Vortex enhances the ability to replace the sensor without shutting down the process.
- **Simplified Troubleshooting** - Device Diagnostics enable field verification of Meter Electronics and Sensor with no process shutdown.

THE ROSEMOUNT 8800D OFFERING

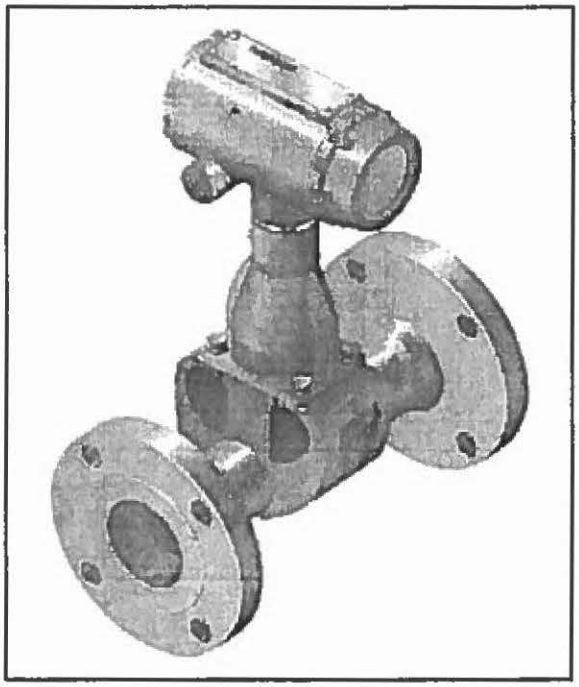

- The 8800D is available in wafer style meter bodies for ½ through 8-in. line sizes, and ASME B16.5 (ANSI), DIN, or JIS flanged style meter bodies for ½ through 12-in. line sizes.
- Alignment rings, provided with each wafer-style flowmeter, ensure that the meter body is properly centered with the adjacent piping.
- The wafer, flanged, and weld end style meter bodies are available in 316 stainless steel and nickel alloy materials of construction.
- Available up to ASME class 1500 for 1 through 8-in. (25 mm through 200 mm) and ASME class 900 for ½-in. (15 mm) through 8-in. (200 mm).
- Available with FOUNDATION fieldbus functionality which includes Device Diagnostics and PlantWeb Alerts.

THE ROSEMOUNT 8800DR REDUCER VORTEX EXTENDS THE MEASURABLE FLOW RANGE AT A REDUCED COST

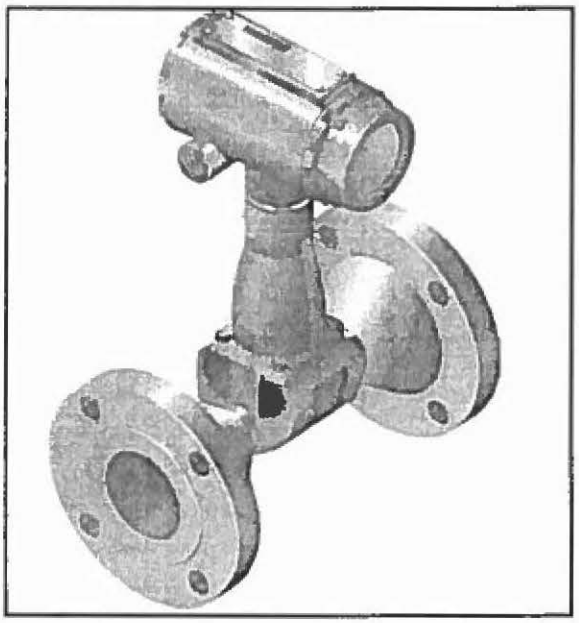

- **Rosemount Reliability** - Designed with same electronics, sensor, and meter body as the 8800D.
- **Reduced Cost** - Eliminates field assembly and welding of separate reducers and piping reducing installed cost by as much as 50%.
- **Extended Measurable Flow** - Low-end flow range is doubled with the Rosemount 8800DR Reducer Vortex.
- **Reduced Project Risk** - Reducer Vortex and the Standard Vortex have the same face-to-face dimension. As a result either meter can be used without affecting pipe layout.
- Available as flanged meter for 1 through 12-in. stainless steel and nickel alloy materials of construction.
- Available with FOUNDATION fieldbus functionality.

THE DUAL-SENSOR VORTEX FLOWMETER

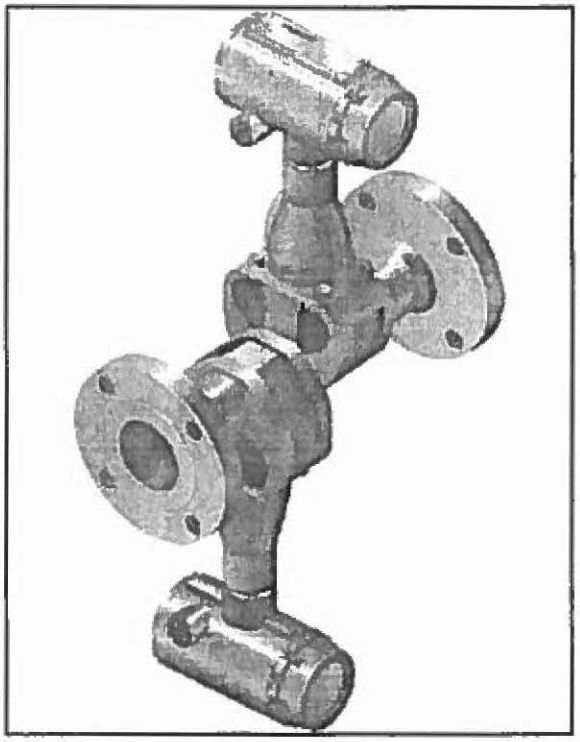

- **Safety Integrated Systems (SIS)** - Ideal solution where redundant flow signals are required.
- **Rosemount Reliability** - Designed with same electronics, sensor, and meter body as the 8800D.
- **Redundant Flow Measurement** - Dual Vortex meter is constructed of two complete vortex meters: sensor, electronics, and shedder bar[1]. The meters are welded together and flow calibrated to provide an accurate single flowmeter with two independent flow measurements.
- Available as flanged meter for ½ through 12-in. stainless steel and nickel alloy materials of construction.

(1) All 6-in. (150 mm) through 12-in. (300 mm) dual style vortex meters have a single shedder bar.

8800D MULTIVARIABLE VORTEX REDUCES INSTALLATION COSTS, SIMPLIFIES INSTALLATION, AND IMPROVES PERFORMANCE IN SATURATED STEAM

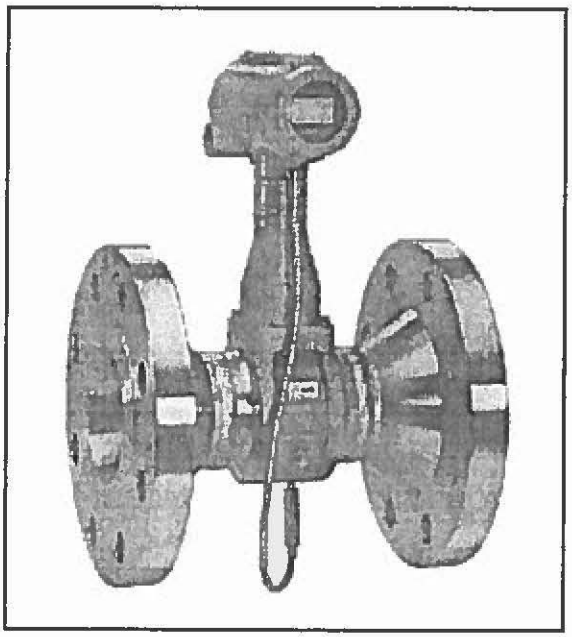

- **MultiVariable Vortex Design**
  Incorporates temperature sensor into the vortex meter using the shedder bar as a thermowell, which keeps the vortex and temperature sensors isolated from process for easy verification and replacement.
- **Temperature Compensated Capability for Saturated Steam**
  Calculates density from measured process temperature and uses the calculated density to provide a temperature compensated mass flow.
- **Increased performance in Saturated Steam**
  Performance in saturated steam is improved due to the fact that the electronics will be compensating for changes in the process temperature.
- **Reduces Installed Costs**
  MultiVariable Vortex eliminates the need for an external thermowell and temperature sensor.
- **Output Options**
  Can map independent variables to analog output, pulse output, or HART burst variables.
- **Available with Flow Computer for additional functionality**
  Integrate the MultiVariable Vortex with a pressure transmitter for full pressure and temperature compensation of superheated steam and various gases.
- **Remote Mount Electronics**
  Also available with remote mounted electronics up to 75 ft. (23 m).

When you integrate the MultiVariable Vortex with a Rosemount Flow Computer, you get:

- Remote Communications
- Heat Calculations
- Remote Totalization
- Peak Demand Calculation
- Datalogging Capabilities

Please see Product Data Sheet 00813-0100-4005 for more information on the Rosemount Flow Computer.

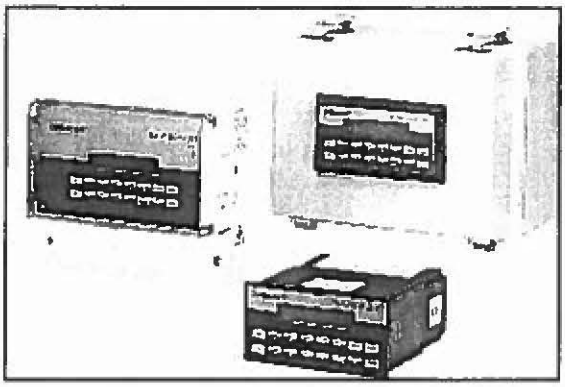

ROSEMOUNT 8800D VORTEX FLOWMETER WITH FOUNDATION FIELDBUS

The software for the 8800D Flowmeter with FOUNDATION fieldbus permits remote testing and configuration using any FOUNDATION fieldbus-compliant host, such as the DeltaV system from Emerson Process Management.

Transducer Block

The transducer block calculates flow from sensor frequency. The calculation includes information about damping, shedding frequency, K-factor, process fluid, pipe ID, and diagnostics.

Resource Block

The resource block contains physical transmitter information, including available memory, manufacturer identification, device type, software tag, and unique identification.

Backup Link Active Scheduler (LAS)

The transmitter is classified as a device link master. A device link master can function as a Link Active Scheduler (LAS) if the current link master device fails or is removed from the segment.

The host or other configuration tool is used to download the schedule for the application to the link master device. In the absence of a primary link master, the transmitter will claim the LAS and provide permanent control for the H1 segment.

Diagnostics

The transmitter automatically performs continuous self-diagnostics. The user can perform on-line testing of the transmitter digital signal. Advanced simulation diagnostics are available. This enables remote verification of the electronics via a flow signal generator built into the electronics. The sensor strength value can be used to view the process flow signal and provide information regarding filter settings.

FOUNDATION Fieldbus Function Blocks

Analog Input

The AI function block processes the measurement and makes it available to other function blocks. The AI function block also allows filtering, alarming, and engineering unit changes.

The 8800D Flowmeter with FOUNDATION fieldbus comes standard with three AI function blocks (1 block for flow, 1 block for signal strength, and one block for future use with the MTA option).

Proportional/Integral/Derivative

The optional PID function block provides a sophisticated implementation of the universal PID algorithm. The PID function block features input for feed forward control, alarms on the process variable, and control deviation. The PID type (series or Instrument Society of America [ISA]) is user-selectable on the derivative filter.

Integrator

The standard integrator block is available for totalization of flow.

Setup

Basic setup requires connecting the transmitter to a fieldbus network or Field Communicator. The FOUNDATION fieldbus-compliant host will automatically establish communication with the device.

The Rosemount 8800D Flowmeter can be easily configured using the DeltaV system.
User-configurable parameters include: tag, scaling and units, process fluid type, damping, fixed process density, pipe inside diameter (ID)[1], and fixed process temperature[1].

Tagging information can be entered into the transmitter to allow identification and a physical description. 32-character tags are provided for identification of the transmitter and each function block.

(1) Process temperature and pipe ID have known effects on the K-factor. The 8800D software automatically accounts for these effects by compensating the K-factor.

Specifications

The following specifications are for the Rosemount 8800D, Rosemount 8800DR, and Rosemount 8800DD, except where noted.

FUNCTIONAL SPECIFICATIONS

Process Fluids

Liquid, gas, and steam applications. Fluids must be homogeneous and single-phase.

Line Sizes

Wafer
½, 1, 1½, 2, 3, 4, 6, and 8 inches
(DN 15, 25, 40, 50, 80, 100, 150, and 200)

Flanged and Dual-Sensor Style
½, 1, 1½, 2, 3, 4, 6, 8, 10, and 12 inches
(DN 15, 25, 40, 50, 80, 100, 150, 200, 250, and 300)

Reducer
1, 1½, 2, 3, 4, 6, 8, 10, and 12 inches
(DN 25, 40, 50, 80, 100, 150, 200, 250, and 300)

Pipe Schedules

Process piping Schedules 10, 40, 80, and 160.

NOTE
The appropriate bore diameter of the process piping must be entered using the Field Communicator or AMS Device Manager. Meters will be shipped from the factory at the Schedule 40 default value unless otherwise specified.

Measurable Flow Rates

Capable of processing signals from flow applications which meet the sizing requirements below.

To determine the appropriate flowmeter size for an application, process conditions must be within the Reynolds number and velocity limitations for the desired line size provided in Table 1, Table 2, and Table 3.

NOTE
Consult your local sales representative to obtain a computer sizing program that describes in greater detail how to specify the correct flowmeter size for an application.

The Reynolds number equation shown below combines the effects of density (ρ), viscosity (μ_{cp}), pipe inside diameter (D), and flow velocity (V).

$$R_D = \frac{VD\rho}{\mu_{cp}}$$

Table 1. Minimum Measurable Meter Reynolds Numbers

Meter Sizes (Inches / DN)	Reynolds Number Limitations
½ through 4/15 through 100	5000 minimum
6 through 12/150 through 300	

Table 2. Minimum Measurable Meter Velocities(1)

	Feet per Second	Meters per Second
Liquids(2)	$\sqrt{36/\rho}$	$\sqrt{54/\rho}$
Gases(2)	$\sqrt{36/\rho}$	$\sqrt{54/\rho}$
The ρ is the process fluid density at flowing conditions in lb/ft³ for ft/s and kg/m³ for m/s		

(1) Velocities are referenced to schedule 40 pipe.

(2) This minimum measurable meter velocity is based on default filter settings.

Table 3. Maximum Measurable Meter Velocities(1)
(Use the smaller of the two values)

	Feet per Second	Meters per Second
Liquids	$\sqrt{90{,}000/\rho}$ or 25	$\sqrt{134{,}000/\rho}$ or 7.6
Gases(2)	$\sqrt{90{,}000/\rho}$ or 250	$\sqrt{134{,}000/\rho}$ or 76
The ρ is the process fluid density at flowing conditions in lb/ft³ for ft/s and kg/m³ for m/s		

(1) Velocities are referenced to schedule 40 pipe.

(2) Accuracy limitations for gas and steam for Dual-style meters (½-in. to 4-in.): max velocity of 100 ft/s (30.5 m/s).

Process Temperature Limits

Standard
–40 to 450 °F (–40 to 232 °C)

Extended
–330 to 800 °F (–200 to 427 °C)

MultiVariable (MTA option)

–40 to 800 °F (–40 to 427 °C)

- Use above 450 °F (232 °C) requires Extended Sensor

Output Signals

4–20 mA Digital HART Signal
Superimposed on 4–20 mA signal

Optional Scalable Pulse Output
0 to 10000 Hz; transistor switch closure with adjustable scaling via HART communications; capable of switching up to 30 Vdc, 120 mA maximum

Digital FOUNDATION fieldbus signal
Completely digital output with FOUNDATION fieldbus communication (ITK 5.1 compliant).

Analog Output Adjustment

Engineering units and lower and upper range values are user-selected. Output is automatically scaled to provide 4 mA at the selected lower range value, 20 mA at the selected upper range value. No frequency input is required to adjust the range values.

Scalable Frequency Adjustment

The scalable pulse output can be set to a specific velocity, volume, or mass (i.e. 1 pulse = 1 lb). The scalable pulse output can also be scaled to a specific rate of volume, mass, or velocity (i.e. 100 Hz = 500 lb/hr).

Ambient Temperature Limits

Operating
–58 to 185 °F (–50 to 85 °C)
–4 to 185 °F (–20 to 85 °C) for flowmeters with local indicator

Storage
–58 to 250 °F (–50 to 121 °C)
–50 to 185 °F (–46 to 85 °C) for flowmeters with local indicator

Pressure Limits

Flange Style Meter
Rated for ASME B16.5 (ANSI) Class 150, 300, 600, 900, and 1500, DIN PN 10, 16, 25, 40, 64, 100, and 160, and JIS 10K, 20K, and 40K

Reducer Style Meter
Rated for ASME B16.5 (ANSI) Class 150, 300, 600, and 900, DIN PN 10, 16, 25, 40, 64, 100, and 160.

Dual Sensor Style Meter
Rated for ASME B16.5 (ANSI) Class 150, 300, 600, 900, and 1500, DIN PN 10, 16, 25, 40, 64, 100, and 160, and JIS 10K, 20K, and 40K

Wafer Style Meter
Rated for ASME B16.5 (ANSI) Class 150, 300, and 600, DIN PN 10, 16, 25, 40, 64, and 100, and JIS 10K, 20K, and 40K

NOTE:
All Wafer Style Meters are pressure rated and labeled at 1500 PSI / 10.34 MPa at 100 °F / 38 °C regardless of Alignment Ring Size code ordered.

Weld-End Style Meter
W1 Welds to Schedule 10 mating pipe
Max Working Pressure 720 psig (4.96 MPa-g)

W4 Welds to Schedule 40 mating pipe
Max Working Pressure 1440 psig (9.93 MPa-g)

W8 Welds to Schedule 80 mating pipe
Max Working Pressure 2160 psig (14.9 MPa-g)

W9 Welds to Schedule 160 mating pipe
Max Working Pressure 3600 psig (24.8 Mpa-g)

NOTE:
1-in. (25 mm), and 1.5-in. (40 mm) weld to Schedule 80 mating pipe

Power Supply

HART Analog
External power supply required. Flowmeter operates on 10.8 to 42 Vdc terminal voltage (with 250-ohm minimum load required for HART communications, 16.8 Vdc power supply is required)

FOUNDATION fieldbus
External power supply required. Flowmeter operates on 9 to 32 Vdc, 18 mA maximum.

Power Consumption

One watt maximum

Load Limitations (HART Analog)

Maximum loop resistance is determined by the voltage level of the external power supply, as described by:

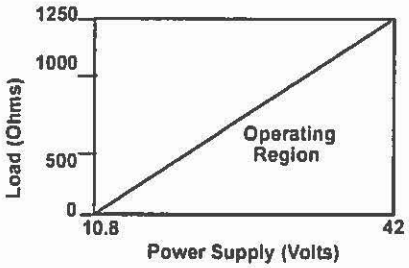

$R_{max} = 41.7(V_{ps} - 10.8)$
V_{ps} = Power Supply Voltage (Volts)
R_{max} = Maximum Loop Resistance (Ohms)

NOTE
HART Communication requires a minimum loop resistance of 250 ohms.

Optional LCD Indicator

The optional LCD indicator is capable of displaying:

- Primary Variable
- Velocity Flow
- Volumetric Flow
- Mass Flow
- Percent of Range
- Analog Output (if applicable)
- Totalizer (Output Code "D" and "P" Only)
- Shedding Frequency
- Pulse Output Frequency (if applicable)
- Electronics Temperature (Output Code "D" and "P" Only)
- Process Temperature (MTA Option Only)
- Calculated Process Density (MTA Option Only)

If more than one item is selected, the display will scroll through all items selected.

Enclosure Rating

FM Type 4X; CSA Type 4X; IP66

Permanent Pressure Loss

The approximate permanent pressure loss (PPL) from the Rosemount 8800D flowmeter is calculated for each application in the Vortex sizing software available from your local Rosemount representative. The PPL is determined using the equation:

$$PPL = \frac{A \times \rho_f \times Q^2}{D^4}$$

where:

PPL = Permanent Pressure loss (psi or kPa)

Where:

ρ_f = Density at operating conditions (lb/ft^3 or kg/m^3)

Q = Actual volumetric flow rate (Gas = ft^3/min or m^3/hr; Liquid = gal/min or l/min)

D = Flowmeter bore diameter (in. or mm)

A = Constant depending on meter style, fluid type and flow units. Determined per following table:

Table 4. Determining the PPL

	English Units		SI Units	
Meter Style	A_{Liquid}	A_{Gas}	A_{Liquid}	A_{Gas}
8800DF/W	3.4×10^{-5}	1.9×10^{-3}	0.425	118
8800DR	3.91×10^{-5}	2.19×10^{-3}	0.489	136
8800DD(1)	6.12×10^{-5}	3.42×10^{-3}	0.765	212

(1) For all 6-in. thru 12-in. line sizes A is the same for 8800DD and 8800DF

Minimum Upstream Pressure (Liquids)

Flow metering conditions that would allow cavitation, the release of vapor from a liquid, should be avoided. This flow condition can be avoided by remaining within the proper flow range of the meter and by following appropriate system design.

For some liquid applications, incorporation of a back pressure valve should be considered. To prevent cavitation, the minimum upstream pressure should be:

$P = 2.9*\Delta P + 1.3*p_v$ or $P = 2.9*\Delta P + p_v + 0.5$ psia (3.45 kPa) (use the smaller of the two results)

P = Line pressure five pipe diameters downstream of the meter (psia or kPa abs)

ΔP = Pressure loss across the meter (psi or kPa)

p_v = Liquid vapor pressure at operating conditions (psia or kPa abs)

Failure Mode Alarm

HART Analog
If self-diagnostics detect a gross flowmeter failure, the analog signal will be driven to the values below:

Low	3.75
High	22.6
NAMUR Low	3.60
NAMUR High	22.6

High or low alarm signal is user-selectable through the fail mode alarm jumper on the electronics. NAMUR-compliant alarm limits are available through the C4 or CN Option. Alarm type is field configurable also.

FOUNDATION fieldbus
The AI block allows the user to configure the alarm to HI-HI, HI, LO, or LO-LO with a variety of priority levels.

Saturation Output Values

When the operating flow is outside the range points, the analog output continues to track the operating flow until reaching the saturation value listed below; the output does not exceed the listed saturation value regardless of the operating flow. The NAMUR-Compliant Saturation Values are available through the C4 or CN option. Saturation type is field configurable.

Low	3.9
High	20.8
NAMUR Low	3.8
NAMUR High	20.5

Damping

Flow Damping adjustable between 0.2 and 255 seconds.

Process Temperature Damping adjustable between 0.4 and 32.0 seconds (MTA Option Only).

Response Time

Three vortex shedding cycles or 300 ms, whichever is greater, maximum required to reach 63.2% of actual input with the minimum damping (0.2 seconds).

Turn-on Time

HART Analog
Less than four (4) seconds plus the response time to rated accuracy from power up (less than 7 seconds with the MTA Option).

FOUNDATION fieldbus
Performance within specifications no greater than 10.0 seconds after power is applied.

Transient Protection

The optional transient terminal block prevents damage to the flowmeter from transients induced by lightning, welding, heavy electrical equipment, or switch gears. The transient protection electronics are located in the terminal block.

The transient terminal block meets the following specifications:
ASME B16.5 (ANSI)/IEEE C62.41 - 1980
(IEEE 587) Categories A, B
3 kA crest (8 × 20 µs)
6 kV crest (1.2 × 50 µs)
6 kV/0.5 kA (0.5 µs, 100 kHz, ring wave)

Security Lockout

When the security lockout jumper is enabled, the electronics will not allow you to modify parameters that affect flowmeter output.

Output Testing

Current Source
Flowmeter may be commanded to set the current to a specified value between 4 and 20 mA.

Frequency Source
Flowmeter may be commanded to set the frequency to a specified value between 0 and 10000 Hz.

Low Flow Cutoff

Adjustable over entire flow range. Below selected value, output is driven to 4 mA and zero pulse output frequency.

Humidity Limits

Operates in 0–95% relative humidity under noncondensing conditions (tested to IEC 60770, Section 6.2.11).

Overrange Capability

HART Analog
Analog signal output continues to 105 percent of span, then remains constant with increasing flow. The digital and pulse outputs will continue to indicate flow up to the upper sensor limit of the flowmeter and a maximum pulse output frequency of 10400 Hz.

FOUNDATION fieldbus
For liquid process fluid type, the transducer block digital output will continue to a nominal value of 25 ft/s. After that, the status associated with the transducer block output will go to UNCERTAIN. Above a nominal value of 30 ft/s, the status will go to BAD.

For gas/steam service, the transducer block digital output will continue to a nominal value of 220 ft/s for 0.5 and 1.0-in. line sizes and a nominal value of 250 ft/s for 1.5–12-in. line sizes. After that, the status associated with the transducer block output will go to UNCERTAIN. Above a nominal value of 300 ft/s for all line sizes, the status will go to BAD.

Flow Calibration

Meter bodies are flow-calibrated and assigned a unique calibration factor (K-factor) at the factory. The calibration factor is entered into the electronics, enabling interchangeability of electronics and/or sensors without calculations or compromise in accuracy of the calibrated meter body.

Status (FOUNDATION fieldbus only)

If self-diagnostics detect a transmitter failure, the status of the measurement will inform the control system. Status may also set the PID output to a safe value.

Schedule Entries (FOUNDATION fieldbus only)

Six (6)

Links (FOUNDATION fieldbus only)

Twelve (12)

Virtual Communications Relationships (VCRs) (FOUNDATION fieldbus only)

Two (2) predefined (F6, F7)
Four (4) configured (see Table 5)

Table 5. Block Information

Block	Base Index	Execution Time (Milliseconds)
Resource (RB)	300	—
Transducer (TB)	400	—
Analog Input (AI)	1,000	20
Proportional/ Integral/Derivative (PID)	10,000	30
Integrator (INT)	12,000	20

Typical Flow Ranges

Table 6 - Table 12 show typical flow ranges for some common process fluids with default filter settings. Consult your local sales representative to obtain a computer sizing program that describes in greater detail the flow range for an application.

Table 6. Typical pipe velocity ranges for 8800D and 8800DR(1)

Process Line Size		Liquid Velocity Ranges		Gas Velocity Ranges	
(Inches/ DN)	Vortex Meter (2)	(ft/s)	(m/s)	(ft/s)	(m/s)
0.5/ 15	8800DF005	0.70 to 25.0	0.21 to 7.6	6.50 to 250.0	1.98 to 76.2
1/ 25	8800DF010	0.70 to 25.0	0.21 to 7.6	6.50 to 250.0	1.98 to 76.2
	8800DR010	0.25 to 8.8	0.08 to 2.7	2.29 to 87.9	0.70 to 26.8
1.5/ 40	8800DF015	0.70 to 25.0	0.21 to 7.6	6.50 to 250.0	1.98 to 76.2
	8800DR015	0.30 to 10.6	0.09 to 3.2	2.76 to 106.1	0.84 to 32.3
2/ 50	8800DF020	0.70 to 25.0	0.21 to 7.6	6.50 to 250.0	1.98 to 76.2
	8800DR020	0.42 to 15.2	0.13 to 4.6	3.94 to 151.7	1.20 to 46.2
3/ 80	8800DF030	0.70 to 25.0	0.21 to 7.6	6.50 to 250.0	1.98 to 76.2
	8800DR030	0.32 to 11.3	0.10 to 3.5	2.95 to 113.5	0.90 to 34.6
4/ 100	8800DF040	0.70 to 25.0	0.21 to 7.6	6.50 to 250.0	1.98 to 76.2
	8800DR040	0.41 to 14.5	0.12 to 4.4	3.77 to 145.2	1.15 to 44.3
6/ 150	8800DF060	0.70 to 25.0	0.21 to 7.6	6.50 to 250.0	1.98 to 76.2
	8800DR060	0.31 to 11.0	0.09 to 3.4	2.86 to 110.2	0.87 to 33.6
8/ 200	8800DF080	0.70 to 25.0	0.21 to 7.6	6.50 to 250.0	1.98 to 76.2
	8800DR080	0.40 to 14.4	0.12 to 4.4	3.75 to 144.4	1.14 to 44.0
10/ 250	8800DF100	0.90 to 25.0	0.27 to 7.6	6.50 to 250.0	1.98 to 76.2
	8800DR100	0.44 to 15.9	0.13 to 4.8	4.12 to 158.6	1.26 to 48.3
12/ 300	8800DF120	1.10 to 25.0	0.34 to 7.6	6.50 to 250.0	1.98 to 76.2
	8800DR120	0.63 to 17.6	0.19 to 5.4	4.58 to 176.1	1.40 to 53.7

(1) Table 6 is a reference of pipe velocities that can be measured for the standard Rosemount 8800D and the reducer Rosemount 8800DR Vortex Meters. It does not consider density limitations, as described in tables 2 and 3. Velocities are referenced in schedule 40 pipe.

(2) Velocity range of the Rosemount 8800DW is the same as Rosemount 8800DF.

Table 7. Water Flow Rate Limits for the Rosemount 8800D and 8800DR(1)

Process Line Size (Inches/ DN)	Vortex Meter (2)	Minimum and Maximum Measurable Water Flow Rates* Gallons/Minute	Cubic Meters/Hour
0.5/ 15	8800DF005	1.76 to 23.7	0.40 to 5.4
1/ 25	8800DF010	2.96 to 67.3	0.67 to 15.3
	8800DR010	1.76 to 23.7	0.40 to 5.4
1.5/ 40	8800DF015	4.83 to 158	1.10 to 35.9
	8800DR015	2.96 to 67.3	0.67 to 15.3
2/ 50	8800DF020	7.96 to 261	1.81 to 59.4
	8800DR020	4.83 to 158.0	1.10 to 35.9
3/ 80	8800DF030	17.5 to 576	4.00 to 130
	8800DR030	7.96 to 261.0	1.81 to 59.3
4/ 100	8800DF040	30.2 to 992	6.86 to 225
	8800DR040	17.5 to 576	4.00 to 130
6/ 150	8800DF060	68.5 to 2251	15.6 to 511
	8800DR060	30.2 to 992	6.86 to 225
8/ 200	8800DF080	119 to 3898	27.0 to 885
	8800DR080	68.5 to 2251	15.6 to 511
10/ 250	8800DF100	231 to 6144	52.2 to 1395
	8800DR100	119 to 3898	27.0 to 885
12/ 300	8800DF120	391 to 8813	88.8 to 2002
	8800DR120	231 to 6144	52.2 to 1395

***Conditions: 77 °F (25 °C) and 14.7 psia (1.01 bar absolute)**

(1) Table 7 is a reference of flow rates that can be measured for the standard Rosemount 8800D and the reducer 8800DR Vortex Meters. It does not consider density limitations, as described in tables 2 and 3.

(2) Velocity range of the 8800DW is the same as 8800DF.

Table 8. Air Flow Rate Limits at 59 °F (15 °C)

Process Pressure	Flow Rate Limits	Minimum and Maximum Air Flow Rates for line sizes 1/2-in./DN 15 through 1-in./DN 25							
		1/2-in./DN 15				1-in./DN 25			
		Rosemount 8800D		Rosemount 8800DR		Rosemount 8800D		Rosemount 8800DR	
		ACFM	ACMH	ACFM	ACMH	ACFM	ACMH	ACFM	ACMH
0 psig (0 bar G)	max	27.9	47.3	Not Available	Not Available	79.2	134	27.9	47.3
	min	3.86	6.56			7.81	13.3	3.86	6.56
50 psig (3,45 bar G)	max	27.9	47.3	Not Available	Not Available	79.2	134	27.9	47.3
	min	1.31	2.22			3.72	6.32	1.31	2.22
100 psig (6,89 bar G)	max	27.9	47.3	Not Available	Not Available	79.2	134	27.9	47.3
	min	0.98	1.66			2.80	4.75	0.98	1.66
150 psig (10,3 bar G)	max	27.9	47.3	Not Available	Not Available	79.2	134	27.9	47.3
	min	0.82	1.41			2.34	3.98	0.82	1.41
200 psig (13,8 bar G)	max	27.9	47.3	Not Available	Not Available	79.2	134	27.9	47.3
	min	0.82	1.41			2.34	3.98	0.82	1.41
300 psig (20,7 bar G)	max	27.9	47.3	Not Available	Not Available	79.2	134	27.9	47.3
	min	0.82	1.41			2.34	3.98	0.82	1.41
400 psig (27,6 bar G)	max	25.7	43.9	Not Available	Not Available	73.0	124	25.7	43.9
	min	0.82	1.41			2.34	3.98	0.82	1.41
500 psig (34,5 bar G)	max	23.0	39.4	Not Available	Not Available	66.0	112	23.0	39.4
	min	0.82	1.41			2.34	3.98	0.82	1.41

Table 9. Air Flow Rate Limits at 59 °F (15 °C)

Process Pressure	Flow Rate Limits	Minimum and Maximum Air Flow Rates for line sizes 1½-in./DN 40 through 2-in./DN 50							
		1½-in./DN 40				2-in./DN 50			
		Rosemount 8800D		Rosemount 8800DR		Rosemount 8800D		Rosemount 8800DR	
		ACFM	ACMH	ACFM	ACMH	ACFM	ACMH	ACFM	ACMH
0 psig	max	212	360	79.2	134	349	593	212	360
(0 bar G)	min	18.4	31.2	7.81	13.3	30.3	51.5	18.4	31.2
50 psig	max	212	360	79.2	134	349	593	212	360
(3,45 bar G)	min	8.76	14.9	3.72	6.32	14.5	24.6	8.76	14.9
100 psig	max	212	360	79.2	134	349	593	212	360
(6,89 bar G)	min	6.58	11.2	2.80	4.75	10.8	18.3	6.58	11.2
150 psig	max	212	360	79.2	134	349	593	212	360
(10,3 bar G)	min	5.51	9.36	2.34	3.98	9.09	15.4	5.51	9.36
200 psig	max	212	360	79.2	134	349	593	212	360
(13,8 bar G)	min	5.51	9.36	2.34	3.98	9.09	15.4	5.51	9.36
300 psig	max	198	337	79.2	134	326	554	198	337
(20,7 bar G)	min	5.51	9.36	2.34	3.98	9.09	15.4	5.51	9.36
400 psig	max	172	293	73.0	124	284	483	172	293
(27.6 bar G)	min	5.51	9.36	2.34	3.98	9.09	15.4	5.51	9.36
500 psig	max	154	262	66.0	112	254	432	154	262
(34.5 bar G)	min	5.51	9.36	2.34	3.98	9.09	15.4	5.51	9.36

Table 10. Air Flow Rate Limits at 59 °F (15 °C)

Process Pressure	Flow Rate Limits	Minimum and Maximum Air Flow Rates for line sizes 3-in./DN 80 through 4-in./DN 100							
		3-in./DN 80				4-in./DN 100			
		Rosemount 8800D		Rosemount 8800DR		Rosemount 8800D		Rosemount 8800DR	
		ACFM	ACMH	ACFM	ACMH	ACFM	ACMH	ACFM	ACMH
0 psig	max	770	1308	349	593	1326	2253	770	1308
(0 bar G)	min	66.8	114	30.3	51.5	115	195	66.8	114
50 psig	max	770	1308	349	593	1326	2253	770	1308
(3,45 bar G)	min	31.8	54.1	14.5	24.6	54.8	93.2	31.8	54.1
100 psig	max	770	1308	349	593	1326	2253	770	1308
(6,89 bar G)	min	23.9	40.6	10.8	18.3	41.1	69.8	23.9	40.6
150 psig	max	770	1308	349	593	1326	2253	770	1308
(10,3 bar G)	min	20.0	34.0	9.09	15.4	34.5	58.6	20.0	34.0
200 psig	max	770	1308	349	593	1326	2253	770	1308
(13,8 bar G)	min	20.0	34.0	9.09	15.4	34.5	58.6	20.0	34.0
300 psig	max	718	1220	326	554	1237	2102	718	1220
(20,7 bar G)	min	20.0	34.0	9.09	15.4	34.5	58.6	20.0	34.0
400 psig	max	625	1062	284	483	1076	1828	625	1062
(27.6 bar G)	min	20.0	34.0	9.09	15.4	34.5	58.6	20.0	34.0
500 psig	max	560	951	254	432	964	1638	560	951
(34,5 bar G)	min	20.0	34.0	9.09	15.4	34.5	58.6	20.0	34.0

Table 11. Air Flow Rate Limits at 59 °F (15 °C)

Process Pressure	Flow Rate Limits	Minimum and Maximum Air Flow Rates for line sizes 6-in./DN 150 through 8-in./DN 200							
		6-in./DN 150				8-in./DN 200			
		Rosemount 8800D		Rosemount 8800DR		Rosemount 8800D		Rosemount 8800DR	
		ACFM	ACMH	ACFM	ACMH	ACFM	ACMH	ACFM	ACMH
0 psig	max	3009	5112	1326	2253	5211	8853	3009	5112
(0 bar G)	min	261	443	115	195	452	768	261	443
50 psig	max	3009	5112	1326	2253	5211	8853	3009	5112
(3,45 bar G)	min	124	211	54.8	93.2	215	365	124	211
100 psig	max	3009	5112	1326	2253	5211	8853	3009	5112
(6,89 bar G)	min	93.3	159	41.1	69.8	162	276	93.3	159
150 psig	max	3009	5112	1326	2253	5211	8853	3009	5112
(10,3 bar G)	min	78.2	133	34.5	58.6	135	229	78.2	133
200 psig	max	3009	5112	1326	2253	5211	8853	3009	5112
(13,8 bar G)	min	78.2	133	34.5	58.6	135	229	78.2	133
300 psig	max	2807	4769	1237	2102	4862	8260	2807	4769
(20,7 bar G)	min	78.2	133	34.5	58.6	135	229	78.2	133
400 psig	max	2442	4149	1076	1828	4228	7183	2442	4149
(27,6 bar G)	min	78.2	133	34.5	58.6	136	229	78.2	133
500 psig	max	2188	3717	964	1638	3789	6437	2188	3717
(34,5 bar G)	min	78.2	133	34.5	58.6	136	229	78.2	133

Table 12. Air Flow Rate Limits at 59 °F (15 °C)

Process Pressure	Flow Rate Limits	Minimum and Maximum Air Flow Rates for line sizes 10-in./DN 250 through 12-in./DN 300							
		10-in./DN 250				12-in./DN 300			
		Rosemount 8800D		Rosemount 8800DR		Rosemount 8800D		Rosemount 8800DR	
		ACFM	ACMH	ACFM	ACMH	ACFM	ACMH	ACFM	ACMH
0 psig	max	8214	13956	5211	8853	11781	20016	8214	13956
(0 bar G)	min	712.9	1211	452	768	1022	1736	712.9	1211
50 psig	max	8214	13956	5211	8853	11781	20016	8214	13956
(3,45 bar G)	min	339.5	577	215	365	486.9	827	339.5	577
100 psig	max	8214	13956	5211	8853	11781	20016	8214	13956
(6,89 bar G)	min	254.7	433	162	276	365.4	621	254.7	433
150 psig	max	8214	13956	5211	8853	11781	20016	8214	13956
(10,3 bar G)	min	213.6	363	135	229	306.3	520	213.6	363
200 psig	max	8214	13956	5211	8853	11781	20016	8214	13956
(13,8 bar G)	min	213.6	363	135	229	306.3	520	213.6	363
300 psig	max	7664	13021	4862	8260	10992	18675	7664	13021
(20,7 bar G)	min	213.6	363	135	229	306.3	520	213.6	363
400 psig	max	6664	11322	4228	7183	9559	16241	6664	11322
(27,6 bar G)	min	213.6	363	136	229	306.3	520	213.6	363
500 psig	max	5972	10146	3789	6437	8565	14552	5972	10146
(34,5 bar G)	min	213.6	363	136	229	306.3	520	213.6	363

NOTES

The Rosemount 8800D measures the volumetric flow under operating conditions (i.e. the actual volume at the operating pressure and temperature–acfm or acmh), as shown above. However, gas volumes are strongly dependent on pressure and temperature. Therefore, gas quantities are typically stated in standard or normal conditions (e.g. SCFM or NCMH). (Standard conditions are typically 59 °F and 14.7 psia. Normal conditions are typically 0 °C and 1 bar abs.)

The flow rate limits in standard conditions are found using the equations below:

Standard Flow Rate = Actual Flow Rate X Density Ratio

Density Ratio = Density at Actual (Operating) Conditions / Density at Standard Conditions

Table 13. Saturated Steam Flow Rate Limits (Assumes Steam Quality is 100%)

Process Pressure	Flow Rate Limits	Minimum and Maximum Saturated Steam Flow Rates for line sizes 1/2-in./DN 15 through 1-in./DN 25							
		½-in./DN 15				1-in./DN 25			
		Rosemount 8800D		Rosemount 8800DR		Rosemount 8800D		Rosemount 8800DR	
		lb/hr	kg/hr	lb/hr	kg/hr	lb/hr	kg/hr	lb/hr	kg/hr
15 psig	max	120	54.6	Not	Not	342	155	120	54.6
(1,03 bar G)	min	12.8	5.81	Available	Available	34.8	15.8	12.8	5.81
25 psig	max	158	71.7	Not	Not	449	203	158	71.7
(1,72 bar G)	min	14.0	6.35	Available	Available	39.9	18.1	14.0	6.35
50 psig	max	250	113	Not	Not	711	322	250	113
(3,45 bar G)	min	17.6	8.00	Available	Available	50.1	22.7	17.6	8.00
100 psig	max	429	194	Not	Not	1221	554	429	194
(6,89 bar G)	min	23.1	10.5	Available	Available	65.7	29.8	23.1	10.5
150 psig	max	606	275	Not	Not	1724	782	606	275
(10,3 bar G)	min	27.4	12.5	Available	Available	78.1	35.4	27.4	12.5
200 psig	max	782	354	Not	Not	2225	1009	782	354
(13,8 bar G)	min	31.2	14.1	Available	Available	88.7	40.2	31.2	14.1
300 psig	max	1135	515	Not	Not	3229	1464	1135	515
(20,7 bar G)	min	37.6	17.0	Available	Available	107	48.5	37.6	17.0
400 psig	max	1492	676	Not	Not	4244	1925	1492	676
(27,6 bar G)	min	44.1	20.0	Available	Available	125	56.7	44.1	20.0
500 psig	max	1855	841	Not	Not	5277	2393	1855	841
(34,5 bar G)	min	54.8	24.9	Available	Available	156	70.7	54.8	24.9

Table 14. Saturated Steam Flow Rate Limits (Assumes Steam Quality is 100%)

Process Pressure	Flow Rate Limits	Minimum and Maximum Saturated Steam Flow Rates for line sizes 1 1/2-in./DN 40 through 2-in./DN 50							
		1½-in./DN 40				2-in./DN 50			
		Rosemount 8800D		Rosemount 8800DR		Rosemount 8800D		Rosemount 8800DR	
		lb/hr	kg/hr	lb/hr	kg/hr	lb/hr	kg/hr	lb/hr	kg/hr
15 psig	max	917	416	342	155	1511	685	917	416
(1,03 bar G)	min	82.0	37.2	34.8	15.8	135	61.2	82.0	37.2
25 psig	max	1204	546	449	203	1983	899	1204	546
(1,72 bar G)	min	93.9	42.6	39.9	18.1	155	70.2	93.9	42.6
50 psig	max	1904	864	711	322	3138	1423	1904	864
(3,45 bar G)	min	118	53.4	50.1	22.7	195	88.3	118	53.4
100 psig	max	3270	1483	1221	554	5389	2444	3270	1483
(6,89 bar G)	min	155	70.1	65.7	29.8	255	116	155	70.1
150 psig	max	4616	2094	1724	782	7609	3451	4616	2094
(10,3 bar G)	min	184	83.2	78.1	35.4	303	137	184	83.2
200 psig	max	5956	2702	2225	1009	9818	4453	5956	2702
(13,8 bar G)	min	209	94.5	88.7	40.2	344	156	209	94.5
300 psig	max	8644	3921	3229	1464	14248	6463	8644	3921
(20,7 bar G)	min	252	114	107	48.5	415	189	252	114
400 psig	max	11362	5154	4244	1925	18727	8494	11362	5154
(27,6 bar G)	min	295	134	125	56.7	487	221	295	134
500 psig	max	14126	6407	5277	2393	23284	10561	14126	6407
(34,5 bar G)	min	367	167	156	70.7	605	274	367	167

Table 15. Saturated Steam Flow Rate Limits (Assumes Steam Quality is 100%)

Process Pressure	Flow Rate Limits	Minimum and Maximum Saturated Steam Flow Rates for line sizes 3-in./DN 80 through 4-in./DN 100							
		3-in./DN 80				4-in./DN 100			
		Rosemount 8800D		Rosemount 8800DR		Rosemount 8800D		Rosemount 8800DR	
		lb/hr	kg/hr	lb/hr	kg/hr	lb/hr	kg/hr	lb/hr	kg/hr
15 psig	max	3330	1510	1511	685	5734	2601	3330	1510
(1,03 bar G)	min	298	135	135	61.2	513	233	298	135
25 psig	max	4370	1982	1983	899	7526	3414	4370	1982
(1,72 bar G)	min	341	155	155	70.2	587	267	341	155
50 psig	max	6914	3136	3138	1423	11905	5400	6914	3136
(3,45 bar G)	min	429	195	195	88.3	739	335	429	195
100 psig	max	11874	5386	5389	2444	20448	9275	11874	5386
(6,89 bar G)	min	562	255	255	116	968	439	562	255
150 psig	max	16763	7603	7609	3451	28866	13093	16763	7603
(10,3 bar G)	min	668	303	303	137	1150	522	668	303
200 psig	max	21630	9811	9818	4453	37247	16895	21630	9811
(13,8 bar G)	min	759	344	344	156	1307	593	759	344
300 psig	max	31389	14237	14248	6463	54052	24517	31389	14237
(20,7 bar G)	min	914	415	415	189	1574	714	914	415
400 psig	max	41258	18714	18727	8494	71047	32226	41258	18714
(27,6 bar G)	min	1073	487	487	221	1847	838	1073	487
500 psig	max	51297	23267	23284	10561	88334	40068	51297	23267
(34,5 bar G)	min	1334	605	605	274	2297	1042	1334	605

Table 16. Saturated Steam Flow Rate Limits (Assumes Steam Quality is 100%)

Process Pressure	Flow Rate Limits	Minimum and Maximum Saturated Steam Flow Rates for line sizes 6-in./DN 150 through 8-in./DN 200							
		6-in./DN 150				8-in./DN 200			
		Rosemount 8800D		Rosemount 8800DR		Rosemount 8800D		Rosemount 8800DR	
		lb/hr	kg/hr	lb/hr	kg/hr	lb/hr	kg/hr	lb/hr	kg/hr
15 psig	max	13013	5903	5734	2601	22534	10221	13013	5903
(1,03 bar G)	min	1163	528	513	233	2015	914	1163	528
25 psig	max	17080	7747	7526	3414	29575	13415	17080	7747
(1,72 bar G)	min	1333	605	587	267	2308	1047	1333	605
50 psig	max	27019	12255	11905	5400	46787	21222	27019	12255
(3,45 bar G)	min	1676	760	739	335	2903	1317	1676	760
100 psig	max	46405	21049	20448	9275	80356	36449	46405	21049
(6,89 bar G)	min	2197	996	968	439	3804	1725	2197	996
150 psig	max	65611	29761	28866	13093	113440	51455	65611	29761
(10,3 bar G)	min	2610	1184	1150	522	4520	2050	2610	1184
200 psig	max	84530	38342	37247	16895	146375	66395	84530	38342
(13,8 bar G)	min	2965	1345	1307	593	5134	2329	2965	1345
300 psig	max	122666	55640	54052	24517	212411	96348	122666	55640
(20,7 bar G)	min	3572	1620	1574	714	6185	2805	3572	1620
400 psig	max	161236	73135	71047	32226	279200	126643	161236	73135
(27,6 bar G)	min	4192	1901	1847	838	7259	3293	4192	1901
500 psig	max	200468	90931	88334	40068	347134	157457	200468	90931
(34,5 bar G)	min	5212	2364	2297	1042	9025	4094	5212	2364

Table 17. Saturated Steam Flow Rate Limits (Assumes Steam Quality is 100%)

Process Pressure	Flow Rate Limits	Minimum and Maximum Saturated Steam Flow Rates for line sizes 10-in./DN 250 through 12-in./DN 300							
		10-in./DN 250				12-in./DN 300			
		Rosemount 8800D		Rosemount 8800DR		Rosemount 8800D		Rosemount 8800DR	
		lb/hr	kg/hr	lb/hr	kg/hr	lb/hr	kg/hr	lb/hr	kg/hr
15 psig	max	35519	16111	22534	10221	50994	23130	35519	16111
(1,03 bar G)	min	3175	1440	2015	914	4554	2066	3175	1440
25 psig	max	46618	21146	29575	13415	66862	30328	46618	21146
(1,72 bar G)	min	4570	2073	2308	1047	5218	2367	4570	2073
50 psig	max	73748	33452	46787	21222	105774	47978	73748	33452
(3,45 bar G)	min	4575	2075	2903	1317	6562	2976	4575	2075
100 psig	max	126660	57452	80356	36449	181663	82401	126660	57452
(6,89 bar G)	min	5996	2720	3804	1725	8600	3901	5996	2720
150 psig	max	178808	81106	113440	51455	256457	116327	178808	81106
(10,3 bar G)	min	7125	3232	4520	2050	10218	4635	7125	3232
200 psig	max	230722	104654	146375	66395	330915	150101	230722	104654
(13,8 bar G)	min	8092	3670	5134	2329	11607	5265	8092	3670
300 psig	max	334810	151867	212411	96348	480203	217816	334810	151867
(20,7 bar G)	min	9749	4422	6185	2805	13983	6343	9749	4422
400 psig	max	440085	199619	279200	126643	631195	286305	440085	199619
(27,6 bar G)	min	11442	5190	7259	3293	16411	7444	11442	5190
500 psig	max	547165	248190	347134	157457	784775	355968	547165	248190
(34,5 bar G)	min	14226	6453	9025	4094	20404	9255	14226	6453

PERFORMANCE SPECIFICATIONS

The following performance specifications are for all Rosemount models except where noted. Digital performance specifications applicable to both Digital HART and FOUNDATION fieldbus output.

Flow Accuracy

Includes linearity, hysteresis, and repeatability.

Liquids - for Reynolds Numbers over 20000

Digital and Pulse Output
±0.65% of rate

Note: The accuracy for the 8800DR, line sizes 6 to 12-in. (150 to 300mm), is ±1.0% of rate.

Analog Output
Same as pulse output plus an additional 0.025% of span

Gas and Steam - for Reynolds Numbers over 15,000

Digital and Pulse Output
±1.0% of rate

Note: The accuracy for the 8800DR, line sizes 6 to 12-in. (150 to 300mm), is ±1.35% of rate.

Analog Output
Same as pulse output plus an additional 0.025% of span

Accuracy limitations for gas and steam:

For ½ and 1-in. (DN 15 and DN 25): max velocity of 220 ft/s (67.06 m/s)

For ½ to 4-in. (DN 15 to DN 200) Dual-style meters: max velocity of 100 ft/s (30.5 m/s)

NOTE
As the meter Reynolds Numbers decreases below the stated limit to 10,000 the accuracy error band will increase linearly to +/-2.0%. For Reynolds Numbers down to 5,000 the accuracy error band will increase linearly from +/-2.0% to +/-6.0%.

Process Temperature Accuracy

2.2 °F (1.2 °C) or 0.4% of reading (in °C), whichever is greater.

NOTE
For remote mount installations, add ±0.018 °F/ft. (±0.03 °C/m) of uncertainty to the temperature measurement.

Mass Flow Accuracy for Temperature Compensated Mass Flow

Digital and Pulse Output
± 2.0% of rate (Nominal)

Nominal conditions include temperature variation in saturation and superheat at 150 psig (10 bar-g) and above.

AVH

For pressure below 150 psig (10 bar-g), add 0.08% of uncertainty for every 15 psi (1 bar) below 150 psig (10 bar-g).

150 − 60 = 90 psi
90 psi / 15 = 6

Analog Output
Same as pulse output plus an additional 0.025% of span

2.0% + 6 × .08
= 2.48%

Repeatability

± 0.1% of actual flow rate

Stability

± 0.1% of rate over one year

Process Temperature Effect

Automatic K-factor correction with user-entered process temperature.

Table 18 indicates the percent change in K-factor per 100 °F (55.5 °C) in process temperature from reference temperature of 77 °F (25 °C).

Table 18. Process Temperature Effect

Material	Percent Change in K-Factor per 100 °F (55.5 °C)
316L @ < 77 °F (25 °C)	+ 0.23
316L @ > 77 °F (25 °C)	- 0.27
Nickel Alloy C < 77 °F (25 °C)	+ 0.22
Nickel Alloy C > 77 °F (25 °C)	- 0.22

Ambient Temperature Effect

Digital and Pulse Outputs
No effect

Analog Output
±0.1% of span from –58 to 185 °F (–50 to 85 °C)

Vibration Effect

An output with no process flow may be detected if sufficiently high vibration is present.

The meter design will minimize this effect, and the factory settings for signal processing are selected to eliminate these errors for most applications.

If an output error at zero flow is still detected, it can be eliminated by adjusting the low flow cutoff, trigger level, or low-pass filter.

As the process begins to flow through the meter, most vibration effects are quickly overcome by the flow signal.

Vibration Specifications

Integral Aluminum Housings, Remote Aluminum Housings, and Remote SST Housings
At or near the minimum liquid flow rate in a normal pipe mounted installation, the maximum vibration should be 0.087-in. (2,21 mm) double amplitude displacement or 1 g acceleration, whichever is smaller. At or near the minimum gas flow rate in a normal pipe mounted installation, the maximum vibration should be 0.043-in. (1,09 mm) double amplitude displacement or ½ g acceleration, whichever is smaller.

Integral SST Housing
At or near the minimum liquid flow rate in a normal pipe mounted installation, the maximum vibration should be 0.044-in. (1,11 mm) double amplitude displacement or ⅓ g acceleration, whichever is smaller. At or near the minimum gas flow rate in a normal pipe mounted installation, the maximum vibration should be 0.022-in. (0,55 mm) double amplitude displacement or ⅛ g acceleration, whichever is smaller.

Mounting Position Effect

Meter will meet accuracy specifications when mounted in horizontal, vertical, or inclined pipelines. Best practice for mounting in a horizontal pipe is to orient the shedder bar in the horizontal plane. This will prevent solids in liquid applications and liquid in gas/steam applications from disrupting the shedding frequency.

EMI/RFI Effect

Meets EMC requirements to EU Directive 2004/108/EC.

HART Analog
Output error less than ±0.025% of span with twisted pair from 80-1000 MHz for radiated field strength of 10 V/m. Tested per EN61326.

FOUNDATION fieldbus and Digital HART
No affect on the values that are being given if using HART digital signal or FOUNDATION fieldbus. Tested per EN61326.

Magnetic-Field Interference

HART Analog
Output error less than ±0.025% of span at 30 A/m (rms).

FOUNDATION fieldbus
No effect on digital output accuracy at 30 A/m (rms). Tested per EN 61326.

Series Mode Noise Rejection

HART Analog
Output error less than ±0.025% of span at 1 V rms, 60 Hz.

FOUNDATION fieldbus
No effect on digital output accuracy at 1 V rms, 60 Hz.

Common Mode Noise Rejection

HART Analog
Output error less than ±0.025% of span at 30 V rms, 60 Hz.

FOUNDATION fieldbus
No effect on digital output accuracy at 250 V rms, 60 Hz.

Power Supply Effect

HART Analog
Less than 0.005% of span per volt

FOUNDATION fieldbus
No effect on accuracy.

PHYSICAL SPECIFICATIONS

NACE Compliance

Materials of Construction meet NACE material recommendations per MR0175/ISO15156 for use in H_2S containing environments in oil field production. Materials of construction also meet NACE recommendations per MR0103-2003 for corrosive petroleum refining environments. MR0103 compliance requires Q25 option in model code.

NOTE:
Certificate of compliance for MR0175/ISO15156 requires Q15 as a separate line item.

Electrical Connections

½–14 NPT, PG 13.5, or M20 × 1.5 conduit threads; screw terminals provided for 4–20 mA and pulse output connections; communicator connections permanently fixed to terminal block.

Non-Wetted Materials

Housing
Low-copper aluminum (FM Type 4X, CSA Type 4X, IP66)
Optional SST housing

Paint
Polyurethane

Cover O-rings
Buna-N

Flanges
316/316L lap joint

Temperature Sensor (MTA Option)
Type-N Thermocouple

Process-Wetted Materials

Meter Body
316L wrought stainless and CF-3M cast stainless or N06022 wrought Nickel Alloy and CW2M cast Nickel Alloy. Other material grades available. Consult factory for other materials of construction.

Flanges
316/316L stainless steel
Nickel Alloy N06022 Weld Neck

Collars
Nickel Alloy N06022
316/316L Stainless Steel

Surface Finish of Flanges and Collars
Standard: To the requirements of the applicable flange standard.
Smooth: 63 to 125 μ inches
(1.6 to 3.1 μ meters) Ra roughness

Process Connections

Mounts between the following flange configurations:

ASME B16.5 (ANSI): Class 150, 300, 600, 900, 1500

DIN: PN 10, 16, 25, 40, 64, 100, 160

JIS: 10K, 20K, and 40K

Weld-end: Schedule 10, Schedule 40, Schedule 80, Schedule 160

Mounting

Integral (Standard)
Electronics are mounted on meter body.

Remote (Optional)
Electronics may be mounted remote from the meter body. Interconnecting coaxial cable available in nonadjustable 10, 20, and 30 ft (3,0, 6,1, and 9,1 m) lengths. Consult factory for non-standard lengths up to 75 ft (22,9 m). Remote mounting hardware includes a pipe mount bracket with one u-bolt.

STAINLESS STEEL PRESSURE TRANSMITTER

PSS2 SERIES

Kele

DESCRIPTION

The **Kele PSS2 Series Stainless Steel Pressure Transmitter** is highly accurate and compact, which makes it ideal for HVAC, building automation, and process gauge pressure applications. A splash-proof Packard-type electrical connector is provided for ease of installation. Eleven standard ranges are available for a wide variety of applications.

PSS2

FEATURES

- ***Splash-proof, plug-in electrical connector***
- ***For steam, water, glycol, refrigerant, and more***
- ***4-20 mA output***
- ***304L/316L stainless steel wetted parts***
- ***Wide range of pressures***
- ***High overpressure capability***

PSS2

PSS2 with optional enclosure and gauge

SPECIFICATIONS

Supply Voltage	8-30 VDC
Signal Output	4-20 mA
Maximum Output Impedance	800Ω @ 24 VDC
Accuracy	Models > 75 psi <0.5% of span Models < 50 psi <1.0% of span
Stability	<0.25% of span/year
Thermal Effect	-40° to 221°F (-40° to 105°C), <0.5% FS
Overpressure	3x range
Burst Pressure	5x range
Measurement Range	0-15 psi to 0-1000 psi
Media Compatibility	Fluids compatible with brass, 304L and 316 stainless steel
Response Time	<1 ms
Operating Temperature	-40° to 221°F (-40° to 105°C)
Process Connection	1/8" MNPT, 316 stainless steel
Wiring Terminations	Splash-proof Packard connector, 16 AWG cable, 36" length
Dimensions	Enclosure: 5.11"H x 5.11"W x 2.95"D (13.0 x 13.0 x 7.5 cm)
Weight	0.3 lb (0.13 kg) with 36" cable
Warranty	1 year

DIMENSIONS

in
(cm)

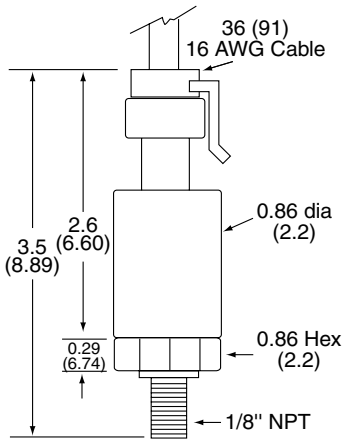

WIRING

in
(cm)

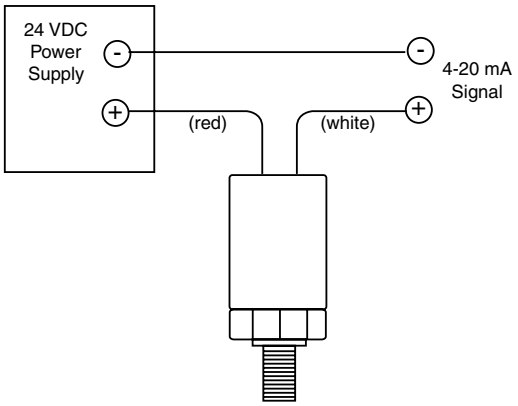

STAINLESS STEEL PRESSURE TRANSMITTER

PSS2 SERIES

INSTALLATION

Mount the **PSS2 Series** in a manner that protects it from steam or temperatures outside of its operating range. A Model PT steam pigtail syphon must be installed in all applications where steam is to be monitored. When monitoring the pressure of a medium that is above or below the temperature operating range of the transmitter, the sensor should be isolated by a length of tubing. If 6" to 12" (15.2 to 30.5 cm) of brass tubing is used, temperatures up to 400°F (204°C) can be tolerated. See the Technical Reference section for information on Steam Isolation and Temperature Protection.

If the **PSS2 Series** is to be subjected to fluid hammer, pressure surges, or pulsations, a Model 47 pressure snubber is recommended.

CAUTION: Not for use with ammonia. The PSS2 can be used with media that is compatible with 304L and 316L stainless steel.

ORDERING INFORMATION

MODEL	DESCRIPTION	
PSS2	Stainless steel 4-20 mA pressure transmitter	
	PRESSURE RANGE psig (kPa)	
	15	0-15 (0-103.4)
	30	0-30 (0-206.9)
	50	0-50 (0-344.8)
	75	0-75 (0-517.1)
	100	0-100 (0-689.5)
	150	0-150 (0-1034)
	200	0-200 (0-1379)
	300	0-300 (0-2068)
	500	0-500 (0-3497)
	750	0-750 (0-5171)
	1000	0-1000 (0-6895)
	OPTIONS (leave blank for no options)	
	E	Watertight enclosure (with stainless steel bulkhead fitting)
	G*	Enclosed with pressure gauge (watertight with transparent cover, brass fittings)
	LCD*	Model LPI-1C LCD display with enclosure (not watertight, brass fittings)
	RED*	Model LPI-1CR red digital display with enclosure (not watertight, brass fittings)

PSS2 – **100** – **G**

Example: **PSS2-100-G** Stainless steel pressure transmitter with a 4-20 mA output over the range of 0-100 psig, with pressure gauge, installed in a watertight enclosure with a transparent cover

* Brass wetted parts option is only for those mediums compatible with brass.

	RELATED PRODUCTS	PAGE
250R-3-1	250 OHM 3 WATT 1% resistor long leads	**1299**
47B-1	Brass piston style snubber	**1112**
47S-1	Stainless steel piston style snubber	**1112**
PT	1/4" pigtail syphon with fittings	**1112**

Honeywell

Series 2000
Electronic Temperature Sensors

PRODUCT DATA

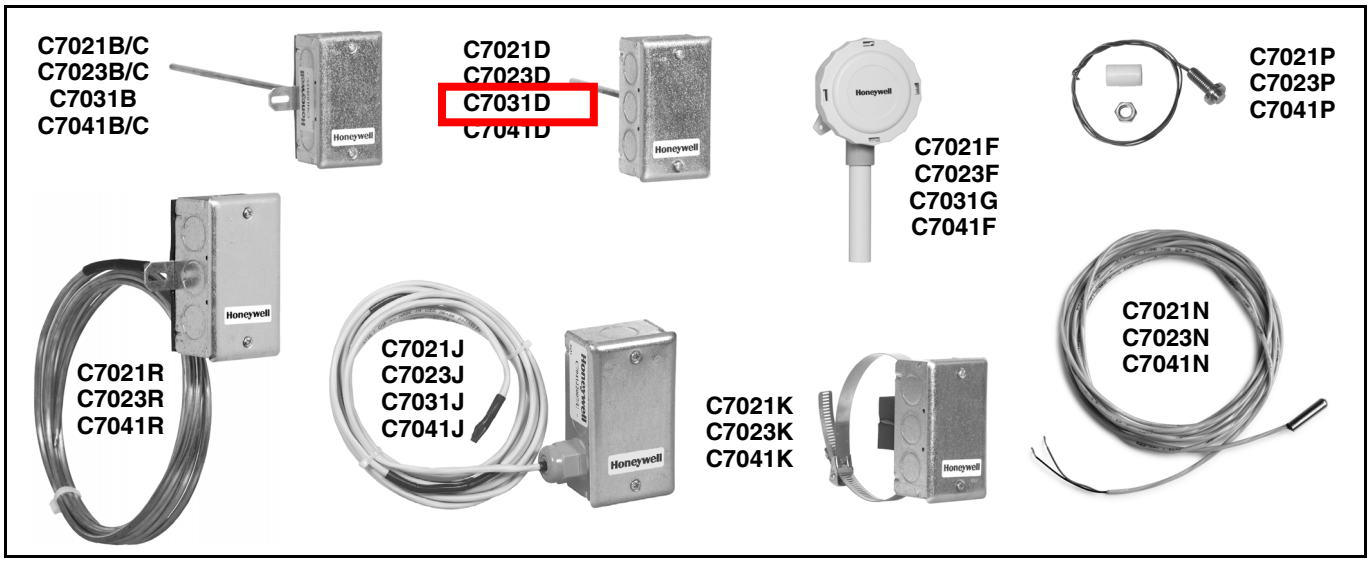

APPLICATION

The Series 2000 C7021, C7023, C7031 and C7041 Electronic Temperature Sensors are designed for use with electronic controllers in domestic or commercial heating and cooling systems.

FEATURES

- **C7021D, C7023D, C7031D, C7041D for immersion mounting sense water temperature.**
- **C7021F, C7023F, C7031G, C7041F sense outdoor air temperature and are weatherproof for outdoor use (knockouts allow for 1/2 in. conduit connection).**
- **C7021J/R, C7023J/R, C7031J, C7041J/R sense average duct air temperature.**
- **C7021B/C, C7023B/C, C7031B, C7041B/C sense duct air temperature.**
- **C7021K, C7023K, C7041K with strap-on mounting senses water temperature.**
- **C7021N, C7023N, C7041N probe senses water or air temperature.**
- **C7021P, C7023P, C7041P senses air temperature.**
- **Solid state components not affected by dust or dirt.**

Contents

Application 1
Features 1
Specifications 2
Installation 7
Wiring 10
Operation and Checkout 10

63-2590-06

SPECIFICATIONS

See Table 1 for additional specifications.

Compatibility:

Use Series 2000 C7031, C7041 Temperature Sensors with Excel 10, 15, 80, 100, and 500 controllers.

Series 2000 C7031B,D,G,J sensors are compatible with various Honeywell controllers. The C7031G2014 is compatible with the T7350 Commercial Thermostat.

Series 2000 C7021 temperature sensors are compatible with TB7600, TB7300 and TB7200 communicating thermostats.

Series 2000 C7023 temperature sensors are compatible with WEBs-AX I/O modules.

Dimensions:

See Fig. 1 through Fig. 11.

Sensor Accuracy:

±0.36°F at 77°F (±0.2°C at 25°C) for 20K ohm NTC sensors and 10K ohm NTC Type II and Type III sensors.

Long-term Temperature Sensor Drift (for C7041 models only): Maximum sensor drift is nominally +/-0.13°F after 5 years of operation, no appreciable drift thereafter. No calibration of the device is possible. Long term drift calibration/maintenance through controller software is typically not necessary.

Accessories:

32006523-001 20K Probe: to allow replacement of old style C7031D1062-1 with non-threaded well.

50001774-001 Stainless Steel 304 Well Assembly: 1/2 in. external and internal NPT threading. Use with C7021D/C7023D/C7031D/C7041D.

50001775-001 Well Adapter: Used with C7021D/C70231D/C7031D/C7041D to allow threading sensor into previously installed Series 1000 32005960-001 Well.

Table 1. Sensor Selection and Application Guide

Model	Control Application	Element Insertion Length	Element Operating Range	Element Max Ambient Temperature	Sensor Resistance in Ohms	Sensitivity[a]
C7021B	Duct discharge air	6 in. (152) or 12	-40° to 250°F (-40° to 121°C)	250°F (121°C)	10K Ohms NTC @ 77° F Type II	—
C7021C	Duct discharge air	18 in. (457 mm)				
C7021D	Hot or chilled water [b]	5 in. (127 mm)				
C7021F	Outdoor air	—	-40° to 158°F (-40° to 70°C)			
C7021J	Duct discharge air (averaging sensor with 4 elements)	12 ft (3.7m)	-40° to 250°F (-40° to 121°C)			
C7021K	Hot water (strap-on mounting)[f]					
C7021N	Water / Air (bullet probe)					
C7021P	Space air temperature (button probe)					
C7021R	Duct discharge air (rigid copper averaging sensor)	12 ft (3.7m) or 24 ft (7.3m)				
C7023B	Duct discharge air	6 in. (152) or 12 in. (305 mm)				
C7023C	Duct discharge air	18 in. (457 mm)				
C7023D	Hot or chilled water [b]	5 in. (127 mm)				

ORDERING INFORMATION

When purchasing replacement and modernization products from your TRADELINE® wholesaler or distributor, refer to the TRADELINE® Catalog or price sheets for complete ordering number. If you have additional questions, need further information, or would like to comment on our products or services, please write or phone:

1. Your local Honeywell Environmental and Combustion Controls Sales Office (check white pages of your phone directory).
2. Honeywell Customer Care
   1885 Douglas Drive North
   Minneapolis, Minnesota 55422-4386
3. http://customer.honeywell.com or http://customer.honeywell.ca

International Sales and Service Offices in all principal cities of the world. Manufacturing in Belgium, Canada, China, Czech Republic, Germany, Hungary, Italy, Mexico, Netherlands, United Kingdom, and United States.

Table 1. Sensor Selection and Application Guide

Model	Control Application	Element Insertion Length	Element Operating Range	Element Max Ambient Temperature	Sensor Resistance in Ohms	Sensitivity[a]
C7023F	Outdoor air		-40° to 158°F (-40° to 70°C)	250°F (121°C)	10K Ohms NTC @ 77° F Type II	—
C7023J	Duct discharge air (averaging sensor with 4 elements)	12 ft (3.7m)	-40° to 250°F (-40° to 121°C)			
C7023K	Hot water (strap-on mounting)[f]					
C7023N	Water / Air (bullet probe)					
C7023P	Space air temperature (button probe)					
C7023R	Duct discharge air (rigid copper averaging sensor)	12 ft (3.7m) or 24 ft (7.3m)	-40° to 250°F (-40° to 121°C)	250°F (121°C)	10K Ohms NTC @ 77° F Type II	—
C7031B	Duct discharge air	6 in. (152 mm)	-40° to 250°F (-40° to 121°C)	250°F (121°C)	1097 at 77° (25°C)[c]	2.1 (3.9)
C7031D	Hot or chilled water	5 in. (127 mm)	40° to 350°F (4° to 115°C)	370°F (187°C)	1097 at 77° (25°C)[c]	2.1 (3.9)
C7031G -2006	Outdoor air	—	-40° to 120°F (-40° to 49°C)	120°F (49°C)	1715 at 90°F (32°C)[c]	2.2 (3.4)
C7031G -2014[d]	Outdoor air	—	-40° to 120°F (-40° to 49°C)	120°F (49°C)	3484 at 77°F (25°C)[c]	2.1 (3.9)
C7031J	Duct discharge air (averaging sensor with 4 elements)	12 ft (3.7m)	40° to 180°F (4° to 82°C)	250°F (121°C)	1097 at 77° (25°C)[c]	2.1 (3.9)
C7041B	Duct discharge air	6 in. (152 mm) or 12 in. (305 mm)	-40° to 250°F (-40° to 121°C)	250°F (121°C)	20K Ohms NTC at 77°F (25°C)[e]	—
C7041C	Duct discharge air	18 in. (457 mm)				
C7041D	Hot or chilled water [b]	5 in. (127 mm)				
C7041F	Outdoor air	—	-40° to 158°F (-40° to 70°C)			
C7041J	Duct discharge air (averaging sensor with 4 elements)	12 ft (3.7m)	-40° to 250°F (-40° to 121°C)			
C7041K	Hot water (strap-on mounting)[f]	—				
C7041N	Water / Air (bullet probe)					
C7041P	Space air temperature (button probe)	—				
C7041R	Duct discharge air (rigid copper averaging sensor)	12 ft (3.7m) or 24 ft (7.3m)				

[a]Control sensitivity in ohms per degree F (per degree C) for element operating range.

[b] Order immersion well separately (50001774-001)

[c] Resistance increases as temperature increases.

[d] Use with T7350 Commercial Thermostat.

[e] Nonlinear resistance decreases as temperature increases.

[f] Not equipped with well; temperature sensed at surface of pipe.

Sensor Resistance

Table 2. Typical Resistance of Sensor Models.

	Typical Resistance (in ohms)			
	C7021 Sensors (10K Ohm NTC Type II)	C7023 Sensors (10K Ohm NTC Type III)	C7031 Sensors (1097 Ohms PTC)	C7041 Sensors (20K ohm NTC)
At 41°F (5°C)	25,392	23,467	1,020	54,200
At 50°F (10°C)	19,901	18,789	1,039	41,758
At 59°F (15°C)	15,712	15,137	1,059	32,427
At 68°F (20°C)	12,493	12,268	1,078	25,370
At 77°F (25°C)	10,000	10,000	1,097	20,000
At 86°F (30°C)	8,057	8,196	1,117	15,856
At 95°F (35°C)	6,531	6,754	1,136	12,654

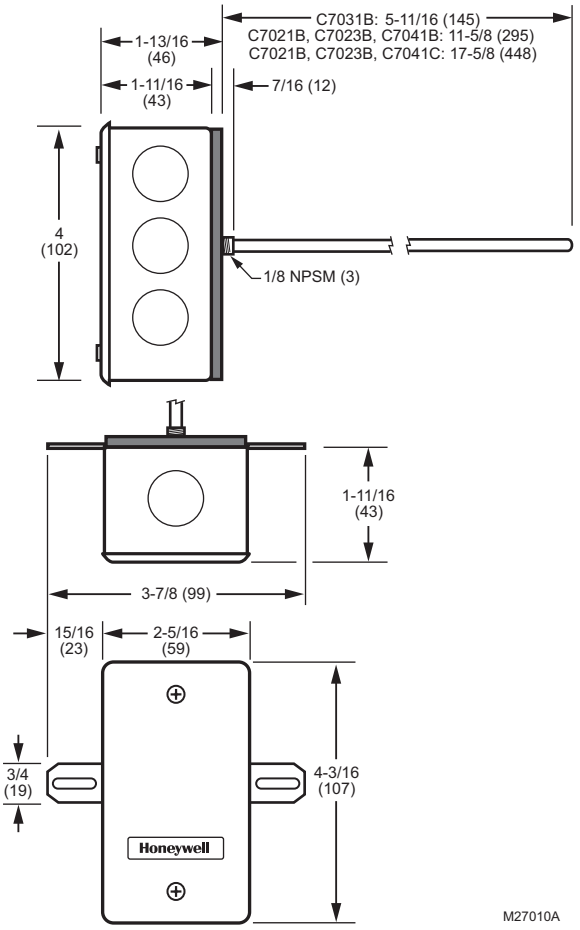

Fig. 1. C7021B/C, C7023B/C, C7041B/C dimensions in in. (mm).

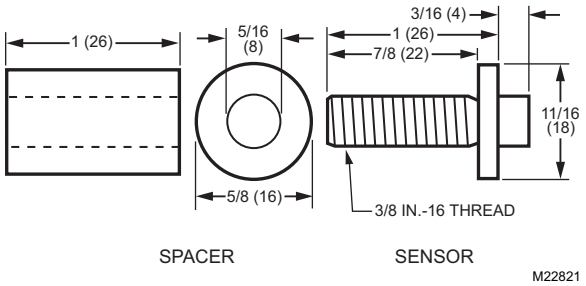

Fig. 2. Dimensions of C7021P, C7023P, C7041P in in. (mm)

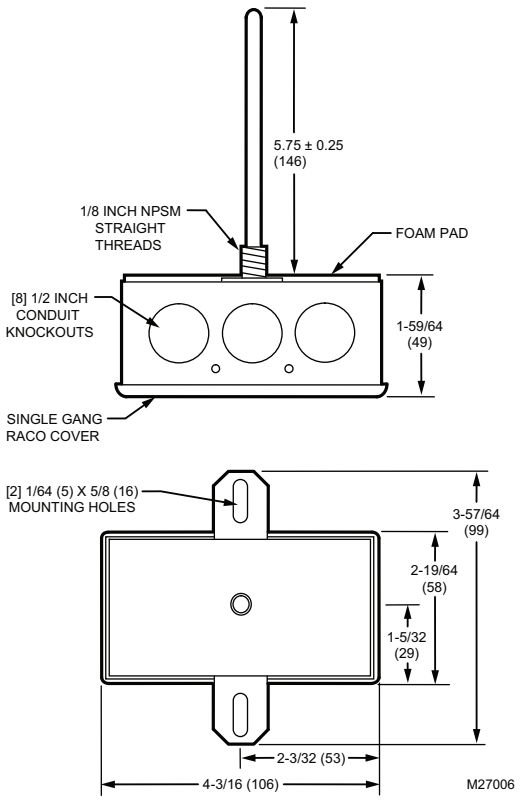

Fig. 3. C7031B dimensions in in. (mm)

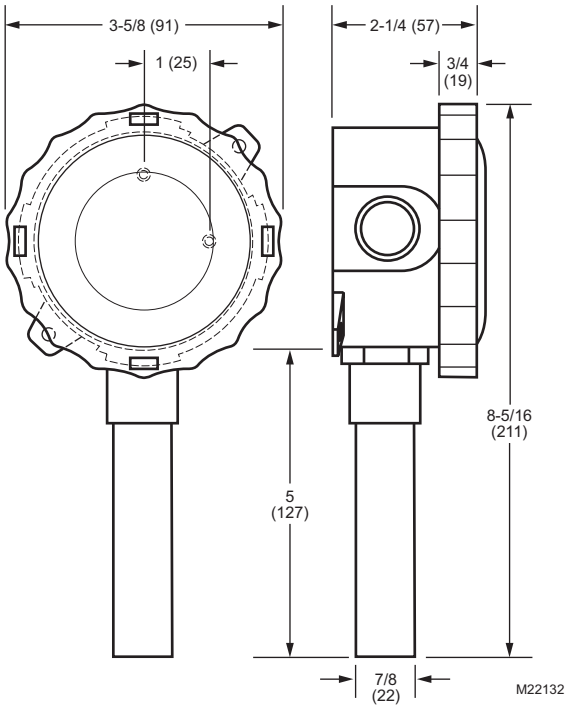

Fig. 4. C7031G, C7021F, C7023F, C7041F dimensions in in. (mm).

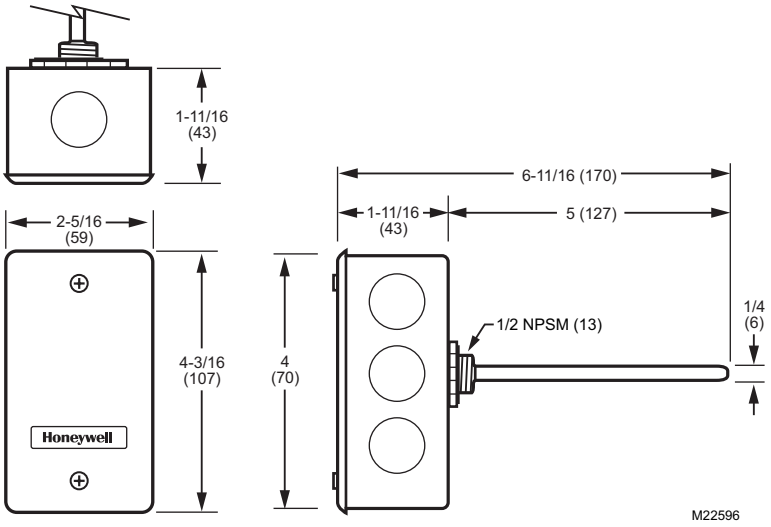

Fig. 5. C7021D, C7023D, C7031D, C7041D dimensions in in. (mm)

NOTE: The C7021D, C7023D, C7041D uses the 50001774-001 Well Assembly. See Fig. 4 for dimensions.

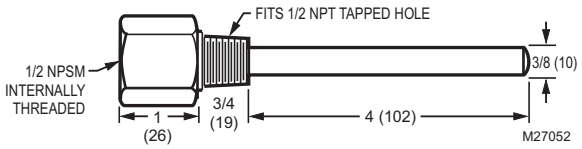

Fig. 6. 50001774-001 Immersion Well dimensions in in. (mm)

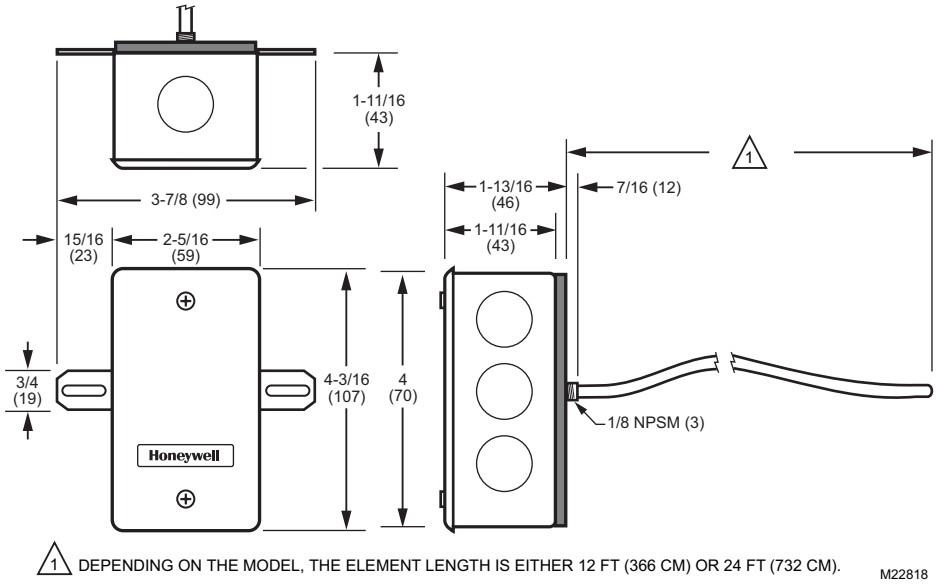

Fig. 7. C7021R, C7023R, C7041R dimensions in in. (mm).

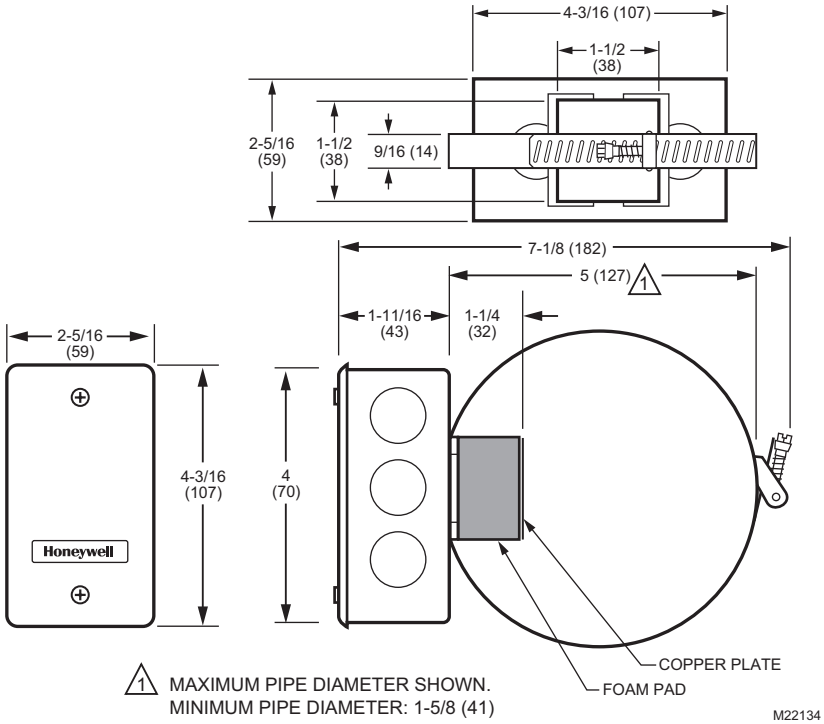

Fig. 8. C7021K, C7023K, C7041K dimensions in in. (mm).

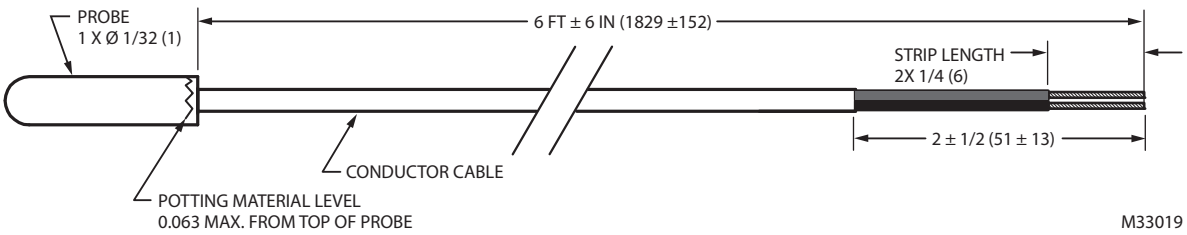

Fig. 9. C7021N, C7023N, C7041N dimensions in in. (mm).

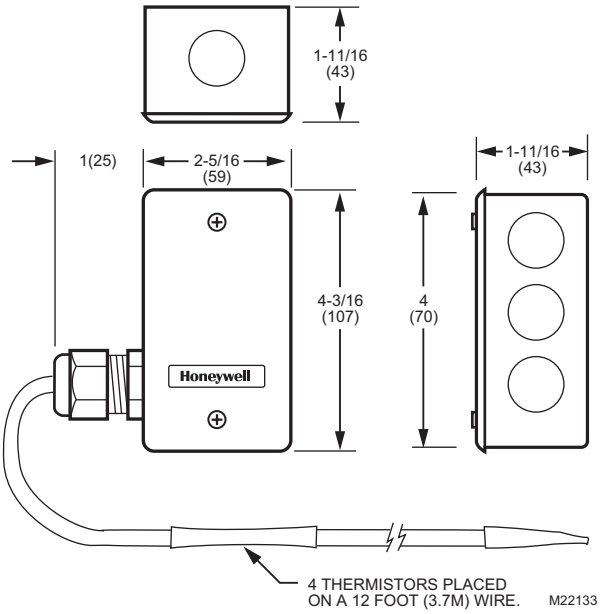

Fig. 10. C7021J, C7023J, C7031J, C7041J dimensions in in. (mm).

INSTALLATION

When Installing this Product...

1. Read these instructions carefully. Failure to follow them could damage the product or cause a hazardous condition.
2. Check the ratings given in the instructions and on the product to make sure the product is suitable for your application.
3. Installer must be a trained, experienced service technician.
4. After installation is complete, check out product operation as provided in these instructions.

⚠ CAUTION

Electrical Shock or Equipment Damage Hazard. Can shock individuals or short equipment circuitry.

Disconnect power supply before installation.

Mounting

The method of mounting depends on the particular application of the temperature sensor. The following procedures include outdoor, duct, immersion well and strap-on applications. Also refer to the instructions for the electronic control.

Outdoor Mounting (C7031G, C7021F, C7023F, C7041F)

The C7031G, C7021F, C7023F and C7041F sense outdoor air temperature. Mount this control where it can sense average outdoor air temperature. Normally, the north side of a building provides a suitable location.

NOTE: These sensors are weatherproof for outdoor use. Knockouts allow for 1/2 in. conduit connection.

1. Remove and set aside the wiring box cover.
2. Mount the sensor to standard 1/2 in. conduit.

   NOTE: Mount sensor so that the element points down.
3. Make wiring connections using two wire nuts.
4. Reattach the wiring box cover.

Duct Mounting

The C7031B, C7031J, C7021B/C/J, C7023B/C/J, C7041B/C/J can be mounted in a duct to sense air temperature.

IMPORTANT

Select a spot for the sensor where it will be exposed to average duct air temperature. Avoid locations where stratification can cause sensing errors.

C7021B,C/C7023B/C, C7041B/C MOUNTING

1. Cut a hole in the duct just large enough to accept the sensing element.
2. Use the sensor case to mark the locations of the pilot holes for the mounting screws.
3. Drill the pilot holes and fasten the sensor to the duct.

C7021J, C7023J, C7031J, C7041J MOUNTING

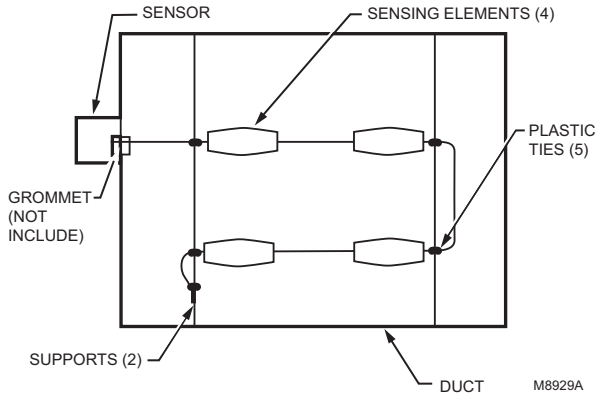

Fig. 11. Duct cross section showing method of installing C7021J, C7023J, C7031J, C7041J Averaging Electronic Sensor.

1. Install two supports inside the duct to hold the averaging element.
2. Cut a 7/8 in. (22 mm) hole in the side of the duct to insert the averaging element.
3. Fasten the terminal box to the outside of the duct and thread the element through the hole and into the duct.
4. Use plastic wire ties to fasten the element to supports. Seal the hole around the element with a rubber grommet.
5. Secure the end of the element to the duct on the support to prevent continuous flexing or abrasion.

IMPORTANT

To assure that the C7021J, C7023J, C7031J, C7041J senses average duct temperature, position the temperature elements approximately as shown in Fig. 11. Do not allow the elements to touch or be close to the duct sides.

NOTE: When the sensor is used as a deck sensor in a multizone system, be sure to space the elements equally in the duct midstream as shown in Fig. 12.

Install one C7021J, C7023J, C7031J, C7041J just upstream from the cold deck zone dampers and the other C7021J, C7023J, C7031J, C7041J upstream from the hot deck zone dampers. Position the thermistors to sense the average deck temperature.

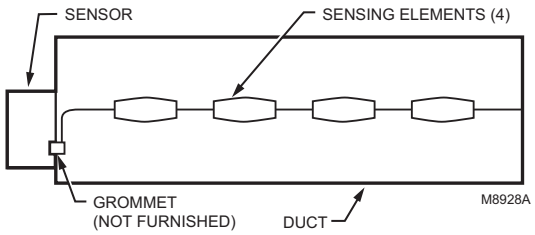

Fig. 12. Duct cross section showing method of installing C7021J, C7023J, C7031J, C7041J in a multizone system.

C7021R, C7023R, C7041R MOUNTING

1. Install two supports inside the duct to hold the averaging element.
2. Cut a 7/8 in. (22 mm) hole in the side of the duct.
3. Insert the averaging element into the duct through the hole.
4. Fasten the terminal box to the outside of the duct and thread the element through the hole and into the duct.
5. Use plastic wire ties to fasten the element to the supports. Seal the hole around the element with a rubber grommet.
6. Secure the end of the element to the duct on the support to prevent continuous flexing or abrasion.

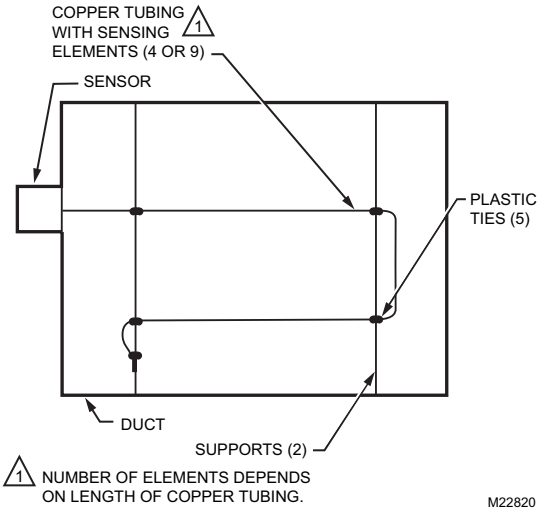

Fig. 13. Duct cross section showing method of installing C7021R, C7023R, C7041R Averaging Electronic Sensor.

IMPORTANT

To ensure that the C7021R, C7023R, C7041R senses average duct temperature, position the temperature elements approximately as shown in Fig. 13. Do not allow the elements to touch or be close to the duct sides.

NOTE: When the sensor is used as a deck sensor in a multizone system, be sure to space the elements equally in the duct midstream as shown in Fig. 14.

Install one C7021R, C7023R, C7041R just upstream from the cold deck zone dampers and the other C7021R, C7023R, C7041R upstream from the hot deck zone dampers. Position the thermistors to sense the average deck temperature.

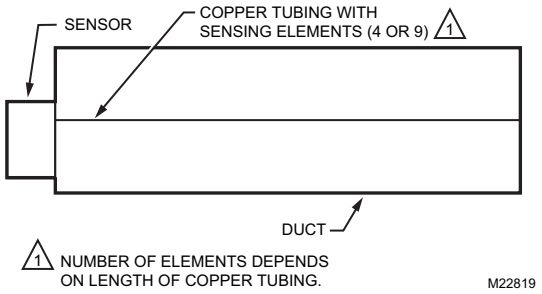

Fig. 14. Duct cross section showing method of installing C7021R, C7023R, C7041R in a multizone system.

Immersion Well Mounting (C7021D, C7023D, C7031D, C7041D)

The C7031D Sensor includes an immersion well. The C7021D, C7023D, and C7041D sensors do not include a well. For the C7021D, C7023D, and C7041D, order the well as an accessory (part no.: 50001774-001).

When used on a boiler, follow the manufacturer instructions for location. If a tapped hole is not provided for the immersion well, provide one as follows:

1. Drain boiler and drill a 23/32 in. (18 mm) hole at the selected location.
2. Cut threads in the hole with a 1/2 in. (13 mm) by 14 NPT tap.

In other installations, mount the immersion well in an elbow with a heel outlet as shown in Fig. 15.

1. Drain the system, if you have not already done it, and open the tapped hole.
2. Put pipe joint compound on the threads of the immersion well and screw it into the tapped hole or elbow, tightening it securely.
3. Refill the system and check for leaks.

Mount the C7021D, C7023D, C7031D and C7041D into the well:

NOTE: Mounting using previously installed Honeywell wells (part no.: 32005960-001) requires an adapter (part no.: 50001775-001).

1. When an adapter is required, first thread it into the well no more than one or two turns.
2. Slide the sensor into the well.
3. Rotate the sensor to thread it tightly into the adapter and the adapter tightly into the well.

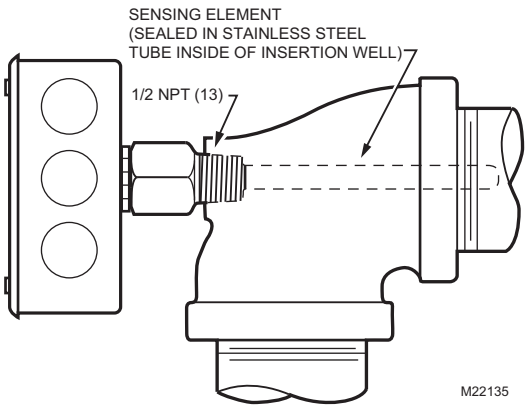

Fig. 15. Method of mounting C7021D, C7023D, C7031D, C7041D Sensor.

Strap-On Mounting (C7021K, C7023K, C7041K)

Strap-on mounting is well-suited for retrofit applications where installation costs can be reduced by not draining the system. The C7021K, C7023K, C7041K Sensor mounts on metal pipes from 1-5/8 inch to five inches in diameter using the straps supplied. Clean the surface of the pipe where the sensor makes contact before mounting (remove insulation from the pipe at the point of installation if necessary). Thermal compound is recommended with the strap-on C7021K, C7023K, C7041K Sensor. Locate the sensor on the discharge pipe within 3 feet (0.9m) of the boiler. See Fig. 16.

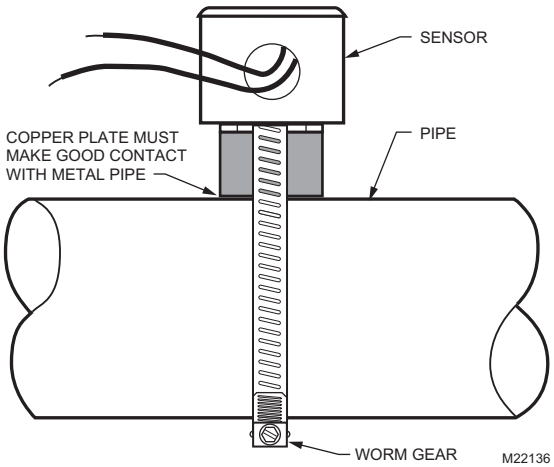

Fig. 16. Strap-on mounting of C7021K, C7023K, C7041K Sensor.

NOTE: Insulation around the contact area increases sensor accuracy.

Button Probe Mounting

The C7021P, C7023P, C7041P Button Probe Sensor design simplifies mounting into a variety of standard structural materials.

The locking nut can be used to secure the probe. See Fig. 18.

The plastic spacer helps insulate the probe from drywall, wood, or other material in which the probe is mounted. The spacer is sized to fit snugly into 1/2 in. metal conduit. See Fig. 17.

NOTES:
— The plastic spacer is threaded for easy installation.
— Use of both the locking nut and spacer requires cutting spacer to shorter length.

C7041P MOUNTING RECOMMENDATIONS

Determine the proper location based upon the following:
— Mount the probe to an inside wall approximately 54 in. (1372 mm) from the floor (or in the specified location) to allow exposure to the average zone temperature.
— Do not mount the probe to an outside wall, a wall containing waterpipes, or near air ducts.
— Avoid locations exposed to register discharge air, or radiation from lights, appliances, or the sun.

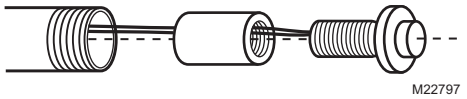

Fig. 17. Mounting sensor in conduit.

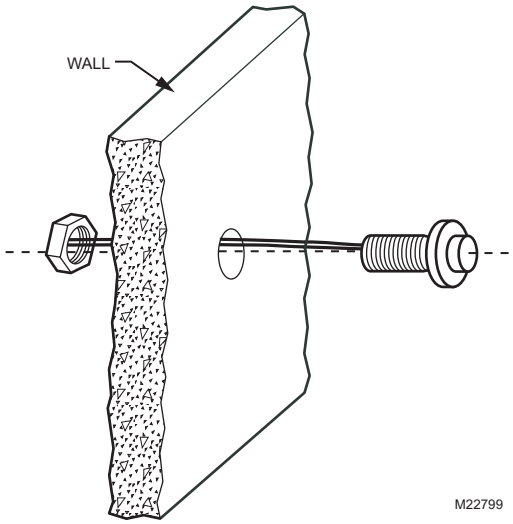

Fig. 18. Mounting sensor in wall with nut only.

Bullet Probe Sensor Mounting (C7021N, C7023N, C7041N)

The bullet probe sensor is a water-resistant sensor that provides a cost-effective solution for surface contact temperature measurement of conditioned water pipes, low pressure steam or refrigerant lines. These sensors are ideal for applications where immersion wells are not practical to install. These sensors can also be use to sense air temperature.

WIRING

⚠ CAUTION

Erratic System Operation Hazard.
Failure to follow proper wiring practices can introduce disruptive electrical interference (noise).

Keep wiring at least one foot away from large inductive loads such as motors line starters, lighting ballasts, and large power distribution panels.

Shielded cable is required in installations where these guidelines cannot be met.

Ground shield only to grounded controller case.

⚠ CAUTION

Electrical Shock or Equipment Damage Hazard.
Can shock individuals or short equipment circuitry.

Disconnect power supply before installation.

IMPORTANT

1. *All wiring must agree with applicable codes, ordinances and regulations.*
2. *Do not mount sensor in incorrect environment.*
3. *Wire according to the applicable controller instructions.*

OPERATION AND CHECKOUT

Operation

The C7041 Temperature Sensors are designed for use with XL500, XL100, XL50, XL15, XL10, and Honeywell LCBS Controllers or any controller requiring 20K ohm NTC non-linear input. As the temperature at the C7041 Sensor increases, the resistance of the sensor decreases, causing the controller to operate and offset the temperature change.

The C7021 Temperature Sensors are designed for use with the TB7600, TB7300, and TB7200 Series Communicating Thermostats or any controller requiring a 10K ohm NTC Type II input.

The C7023 Temperature Sensors are designed for use with WEBs-AX I/O Modules or any controller requiring a 10K ohm NTC Type III input.

Checkout

Refer to the applicable controller instructions when checking out the complete heating and cooling systems.

To check out the sensors, move the thermostat or remote setpoint potentiometer below the temperature of the cooling or heating medium. Watch the motor, valve or damper for the correct movement.

By using this Honeywell literature, you agree that Honeywell will have no liability for any damages arising out of your use or modification to, the literature. You will defend and indemnify Honeywell, its affiliates and subsidiaries, from and against any liability, cost, or damages, including attorneys' fees, arising out of, or resulting from, any modification to the literature by you.

Automation and Control Solutions
Honeywell International Inc.
1985 Douglas Drive North
Golden Valley, MN 55422
customer.honeywell.com

Honeywell

® U.S. Registered Trademark
© 2015 Honeywell International Inc.
63-2590—06 M.S. Rev. 06-15
Printed in United States

ASHCROFT®
Trust the shield.™

Model A2X Explosion/Flame Proof Pressure Transmitter

LOOK FOR THESE MARKS ON OUR PRODUCTS

APPLICATIONS:

Oil field equipment, upstream oil and gas production, natural gas compression and transfer control, alternative energy projects

FEATURES:

- ***cUL and ATEX listed***
- ***Choice of 0.25, 0.50 or 1.0% accuracy***
- ***Pressure ranges from 5 psi through 10,000 psi***
- ***CE mark***
- ***316L SS wetted materials, 17-4 PH optional***
- ***304 SS case***
- ***Six output signals to choose from***
- ***Optional absolute pressure ranges available***

The Ashcroft® A2X pressure transmitter is ideal for a broad spectrum of pressure sensing requirements requiring approvals for explosion/flame proof.

The Ashcroft® A2X is designed and manufactured to provide the user with accurate, reliable, and stable output data. This is accomplished through the use of an on board microprocessor, that is programmed during a unique digital compensation process, to provide extremely linear and precise performance over the entire specified pressure and temperature range.

PERFORMANCE SPECIFICATIONS

Reference temperature 70°F (21°C)

Accuracy, Three Classes (% Span): ±.25 ±0.5 ±1.0

Includes non-linearity (Terminal Point Method), hysteresis, non-repeatability, zero offset and span setting errors

Best Fit Straight Line* (BFSL): ±.20 ±.40 ±.50

Includes non-linearity hysteresis, non-repeatability errors

*Add ±.05% for ranges above 5000 psi

Stability:
≤ ±0.25% Span/year @ reference conditions

Durability: Greater than 10 million cycles

ENVIRONMENTAL SPECIFICATIONS

Temperature Limits:

Storage:	–40 to +125°C	(–40 to 257°F)
Process:	–40 to +125°C	(–40 to 257°F)
Operating:	–40 to +125°C	(–40 to 257°F)
Compensated*:	–20 to +85°C	(–4 to 185°F)

*Consult factory for other options

Temperature Effects: –20 to +85°C (–4 to 185°F)
- 1.0% of Span for .25% Accuracy Class
- 2.0% of Span for .50% and 1.0% Accuracy Classes

Humidity Effects: No performance effects from 0 to 95% relative humidity, non-condensing, 0-100% RH with "W" enclosure.

*Consult factory

FUNCTIONAL SPECIFICATIONS

Respone Time: <2ms

Pressure Ranges: Vacuum, gauge, compound and absolute pressure from 0-5 psi through 0-10,000. Equivalent ranges in bar available. See order guide section (reverse.)

Vibration Effect:

Shock:	100g Peak, 11ms
Random:	10g RMS, 20-2000Hz
Sweep:	50-2000Hz, 5g peak

Position Effect: ± 0.02% Typical

CE Mark (standard): EN 61326:1997 + A1: 1998 Annex A
Heavy Industrial Immunity (Annex A, Table A.1)
Light Industrial/Residential Emission (Table 4)

Overpressure (F.S.)*:	**Proof**	**Burst**
0#/vac. to 300 psi	1.5 x F.S.	min. 2 x F.S.
500-10,000 psi	1.2 x F.S.	1.5 x F.S.

*For higher overpressure ratings use XK8 option. See page 2 for additional option.

ELECTRICAL SPECIFICATIONS

Output Signal:		**Supply Voltage: (unregulated)**	
		Minimum	**Maximum**
0-5Vdc	(3 Wire)	12Vdc	36Vdc
0-10Vdc	(3 Wire)	14Vdc	36Vdc
1-5Vdc	(3 Wire)	10Vdc	36Vdc
1-6Vdc	(3 Wire)	10Vdc	36Vdc
4-20mA	(2 Wire)	12Vdc	36Vdc*

*30Vdc max for Intrinsically Safe installations

Power Requirements:
Supply Current: <5mA for voltage outputs

Electrical Termination:
1/2 NPT male conduit with flying leads or shielded cable

Circuit Protection: Reverse polarity and mis-wire proected
Insulation Resisance (Circuit to Case): 100Mohm @ 30Vdc

PHYSICAL SPECIFICATIONS

Case: Material 304SS

Wetted Materials: 316L SS diaphragm and presure port, optional 17-4PH SS diaphragm and 316L SS pressure port (see How to Order Section).

Ingress Protection Rating: IP65; NEMA 7,9

All units less than 500 psi include a small metal sintered filter at the top of the unit. This is necessary to equalize the internal pressure with atmospheric pressure but can be a point of moisture ingress.

HAZARDOUS AREA CERTIFICATIONS

Explosion Proof – cUL (USL/CNL): Specify A2X
Class I, Div. 1 & 2, Groups A, B, C and D
Class II, Div. 1 & 2, Groups E, F and G

Flame Proof – ATEX: Specify A2X
CE Ex II 2 G
Ex d IIC T4

NOTE: For 4-20mA units following approvals also apply:
Intrinsically Safe – FM/CSA:
Class I, Div. 1
Class I, Div. 2, Non-Incendive
Refer to Ashcroft drawing #825A022 for wiring and installation requirements.

NOTE:

Refer to Ashcroft Model A2 for Heavy Industrial, non-Hazardous rated configurations and Ashcroft Model A4 for Intrinsically Safe/non-Incendive applications.

All specifications are subject to change without notice.
All sales subject to standard terms and conditions.
© 2013 Ashcroft Inc., Rev. 07/2014

Ashcroft Inc., 250 East Main Street, Stratford, CT 06614 USA
Tel: 203-385-0648 • Fax: 203-385-0408
email: info@ashcroft.com • www.ashcroft.com

ASHCROFT®
Trust the shield.™

Model A2X Explosion/Flame Proof Pressure Transmitter

DIMENSIONS dimensions in ( ) are mm

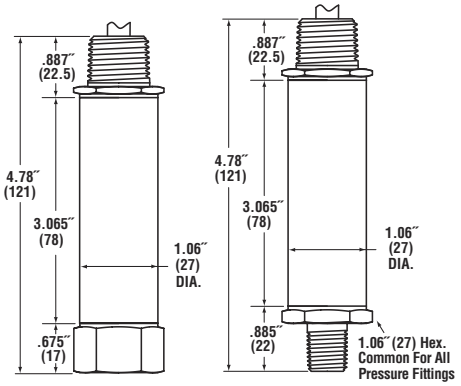

EXPLOSION / FLAME PROOF ENCLOSURE

Load Limitations 4-20mA Output Only

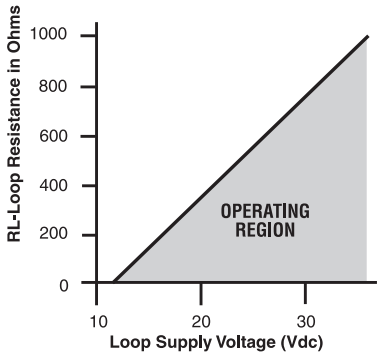

VdcMIN = 12V + (0.022A* X (RL))

$R_L = R_S + R_W$
R_L = Loop Resistance (ohms)
R_S = Sense Resistance (ohms)
R_W = Wiring Resistance (ohms)
* (Includes a 10% safety factor)

XK8 OVERPRESSURE (F.S.)

	Proof	Burst
0 to 2000 psi	200%	800%
3000 to 5000 psi	150%	300%
7500 to 10,000 psi	120%	150%

NOTE:
Refer to Ashcroft Model A2 for Heavy Industrial, non-Hazardous rated configurations and Ashcroft Model A4 for Intrinsically Safe/non-Incendive applications.

[7]Available only with accuracy B & C.

How To Order

A 2 X

Type Configuration
(A2X)

Accuracy / Temp. Effects
(A) 0.25%/≤1.0% (–20°C to +85°C)
(B) 0.50%/≤2.0% (–20°C to +85°C)
(C) 1.00%/≤2.0% (–20°C to +85°C)

Pressure Connection
(M01) ⅛ NPT-M
(M02) ¼ NPT-M
(F02) ¼ NPT-F
(MEK) 7/16-20 SAE-M
(F09) 9/16-18 (¼)-F (Aminco)
(M04) ½ NPT-M
(F04) ½ NPT-F
(MG4) G ½ M
(VM2) VCR inlet fitting ¼″ VCR gland with 9/16-18 male nut
(VF2) VCR inlet fitting ¼″ VCR gland with 9/16-18 female nut
(others available upon request)

Output Signal
(05) 0-5 Vdc
(10) 0-10 Vdc
(15) 1-5 Vdc
(16) 1-6 Vdc
(42) 4-20mA

Electrical Termination
½ NPT Male Conduit

Flying Leads
(C2) with 3´ leads
(C5) with 10´ leads

Shielded Cable
(C1) with 3´ cable
(C6) with 15´ cable
(C7) with 30´ cable
(P7) with customer defined length

Pressure Range
(1.5#) 1.5 psi[5],[6],[7]
(5#) 5 psi[5],[6]
(10#) 10 psi[5],[6]
(15#) 15 psi[5]
(30#) 30 psi[5]
(50#) 50 psi
(60#) 60 psi
(75#) 75 psi
(100#) 100 psi
(150#) 150 psi
(200#) 200 psi
(300#) 300 psi
(500#) 500 psi
(750#) 750 psi
(1000#) 1000 psi
(1500#) 1500 psi
(2000#) 2000 psi
(3000#) 3000 psi
(5000#) 5000 psi
(7500#) 7500 psi
(10,000#) 10,000 psi[4]
(0# & vac.) 0 psi/vac.[5],[6]
(15# & vac.) Vac./15 psi[5],[6]
(30# & vac.) Vac./30 psi[5],[6]
(45# & vac.) Vac./45 psi[6]
(60# & vac.) Vac./60 psi[6]

Measurement Type
(G) Gauge Pressure Sensor
(A) Absolute Pressure Sensor

X

Optional X-Variations
(XCL) Non-standard[4] calibration
(XK8) 17-4PH SS Sensor Material
(X6B) Cleaned For Oxygen Service

[4]17-4PH SS Sensor Required
[5]17-4PH SS Sensor Not Available
[6]Gauge pressure only
[7]Available only with accuracy B & C

NOTE: All A2X pressure transmitters include a 9 pt. NIST traceable calibration certificate

7All specifications are subject to change without notice.
All sales subject to standard terms and conditions.
© 2013 Ashcroft Inc., Rev. 07/2014

Ashcroft Inc., 250 East Main Street, Stratford, CT 06614 USA
Tel: 203-385-0648 • Fax: 203-385-0408
email: info@ashcroft.com • www.ashcroft.com

Honeywell

Series 2000
Electronic Temperature Sensors

PRODUCT DATA

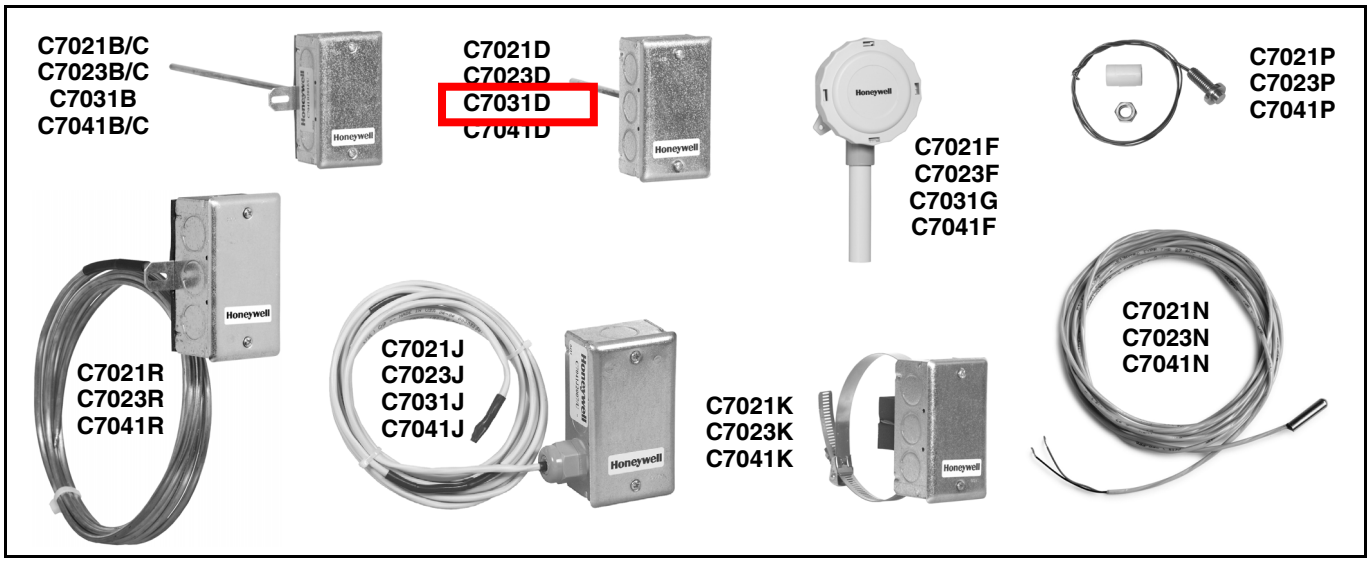

APPLICATION

The Series 2000 C7021, C7023, C7031 and C7041 Electronic Temperature Sensors are designed for use with electronic controllers in domestic or commercial heating and cooling systems.

FEATURES

- **C7021D, C7023D, C7031D, C7041D for immersion mounting sense water temperature.**
- **C7021F, C7023F, C7031G, C7041F sense outdoor air temperature and are weatherproof for outdoor use (knockouts allow for 1/2 in. conduit connection).**
- **C7021J/R, C7023J/R, C7031J, C7041J/R sense average duct air temperature.**
- **C7021B/C, C7023B/C, C7031B, C7041B/C sense duct air temperature.**
- **C7021K, C7023K, C7041K with strap-on mounting senses water temperature.**
- **C7021N, C7023N, C7041N probe senses water or air temperature.**
- **C7021P, C7023P, C7041P senses air temperature.**
- **Solid state components not affected by dust or dirt.**

Contents

Application 1
Features 1
Specifications 2
Installation 7
Wiring 10
Operation and Checkout 10

63-2590-06

SPECIFICATIONS

See Table 1 for additional specifications.

Compatibility:

Use Series 2000 C7031, C7041 Temperature Sensors with Excel 10, 15, 80, 100, and 500 controllers.

Series 2000 C7031B,D,G,J sensors are compatible with various Honeywell controllers. The C7031G2014 is compatible with the T7350 Commercial Thermostat.

Series 2000 C7021 temperature sensors are compatible with TB7600, TB7300 and TB7200 communicating thermostats.

Series 2000 C7023 temperature sensors are compatible with WEBs-AX I/O modules.

Dimensions:

See Fig. 1 through Fig. 11.

Sensor Accuracy:

±0.36°F at 77°F (±0.2°C at 25°C) for 20K ohm NTC sensors and 10K ohm NTC Type II and Type III sensors.

Long-term Temperature Sensor Drift (for C7041 models only): Maximum sensor drift is nominally +/-0.13°F after 5 years of operation, no appreciable drift thereafter. No calibration of the device is possible. Long term drift calibration/maintenance through controller software is typically not necessary.

Accessories:

32006523-001 20K Probe: to allow replacement of old style C7031D1062-1 with non-threaded well.

50001774-001 Stainless Steel 304 Well Assembly: 1/2 in. external and internal NPT threading. Use with C7021D/C7023D/C7031D/C7041D.

50001775-001 Well Adapter: Used with C7021D/C70231D/C7031D/C7041D to allow threading sensor into previously installed Series 1000 32005960-001 Well.

Table 1. Sensor Selection and Application Guide

Model	Control Application	Element Insertion Length	Element Operating Range	Element Max Ambient Temperature	Sensor Resistance in Ohms	Sensitivity[a]
C7021B	Duct discharge air	6 in. (152) or 12	-40° to 250°F (-40° to 121°C)	250°F (121°C)	10K Ohms NTC @ 77° F Type II	—
C7021C	Duct discharge air	18 in. (457 mm)				
C7021D	Hot or chilled water [b]	5 in. (127 mm)				
C7021F	Outdoor air	—	-40° to 158°F (-40° to 70°C)			
C7021J	Duct discharge air (averaging sensor with 4 elements)	12 ft (3.7m)	-40° to 250°F (-40° to 121°C)			
C7021K	Hot water (strap-on mounting)[f]					
C7021N	Water / Air (bullet probe)					
C7021P	Space air temperature (button probe)					
C7021R	Duct discharge air (rigid copper averaging sensor)	12 ft (3.7m) or 24 ft (7.3m)				
C7023B	Duct discharge air	6 in. (152) or 12 in. (305 mm)				
C7023C	Duct discharge air	18 in. (457 mm)				
C7023D	Hot or chilled water [b]	5 in. (127 mm)				

ORDERING INFORMATION

When purchasing replacement and modernization products from your TRADELINE® wholesaler or distributor, refer to the TRADELINE® Catalog or price sheets for complete ordering number. If you have additional questions, need further information, or would like to comment on our products or services, please write or phone:

1. Your local Honeywell Environmental and Combustion Controls Sales Office (check white pages of your phone directory).
2. Honeywell Customer Care
   1885 Douglas Drive North
   Minneapolis, Minnesota 55422-4386
3. http://customer.honeywell.com or http://customer.honeywell.ca

International Sales and Service Offices in all principal cities of the world. Manufacturing in Belgium, Canada, China, Czech Republic, Germany, Hungary, Italy, Mexico, Netherlands, United Kingdom, and United States.

Table 1. Sensor Selection and Application Guide

Model	Control Application	Element Insertion Length	Element Operating Range	Element Max Ambient Temperature	Sensor Resistance in Ohms	Sensitivity[a]
C7023F	Outdoor air		-40° to 158°F (-40° to 70°C)	250°F (121°C)	10K Ohms NTC @ 77° F Type II	—
C7023J	Duct discharge air (averaging sensor with 4 elements)	12 ft (3.7m)	-40° to 250°F (-40° to 121°C)			
C7023K	Hot water (strap-on mounting)[f]					
C7023N	Water / Air (bullet probe)					
C7023P	Space air temperature (button probe)					
C7023R	Duct discharge air (rigid copper averaging sensor)	12 ft (3.7m) or 24 ft (7.3m)	-40° to 250°F (-40° to 121°C)	250°F (121°C)	10K Ohms NTC @ 77° F Type II	—
C7031B	Duct discharge air	6 in. (152 mm)	-40° to 250°F (-40° to 121°C)	250°F (121°C)	1097 at 77° (25°C)[c]	2.1 (3.9)
C7031D	Hot or chilled water	5 in. (127 mm)	40° to 350°F (4° to 115°C)	370°F (187°C)	1097 at 77° (25°C)[c]	2.1 (3.9)
C7031G -2006	Outdoor air	—	-40° to 120°F (-40° to 49°C)	120°F (49°C)	1715 at 90°F (32°C)[c]	2.2 (3.4)
C7031G -2014[d]	Outdoor air	—	-40° to 120°F (-40° to 49°C)	120°F (49°C)	3484 at 77°F (25°C)[c]	2.1 (3.9)
C7031J	Duct discharge air (averaging sensor with 4 elements)	12 ft (3.7m)	40° to 180°F (4° to 82°C)	250°F (121°C)	1097 at 77° (25°C)[c]	2.1 (3.9)
C7041B	Duct discharge air	6 in. (152 mm) or 12 in. (305 mm)	-40° to 250°F (-40° to 121°C)	250°F (121°C)	20K Ohms NTC at 77°F (25°C)[e]	—
C7041C	Duct discharge air	18 in. (457 mm)				
C7041D	Hot or chilled water [b]	5 in. (127 mm)				
C7041F	Outdoor air	—	-40° to 158°F (-40° to 70°C)			
C7041J	Duct discharge air (averaging sensor with 4 elements)	12 ft (3.7m)	-40° to 250°F (-40° to 121°C)			
C7041K	Hot water (strap-on mounting)[f]	—				
C7041N	Water / Air (bullet probe)					
C7041P	Space air temperature (button probe)	—				
C7041R	Duct discharge air (rigid copper averaging sensor)	12 ft (3.7m) or 24 ft (7.3m)				

[a]Control sensitivity in ohms per degree F (per degree C) for element operating range.

[b] Order immersion well separately (50001774-001)

[c] Resistance increases as temperature increases.

[d] Use with T7350 Commercial Thermostat.

[e] Nonlinear resistance decreases as temperature increases.

[f] Not equipped with well; temperature sensed at surface of pipe.

Sensor Resistance

Table 2. Typical Resistance of Sensor Models.

	Typical Resistance (in ohms)			
	C7021 Sensors (10K Ohm NTC Type II)	C7023 Sensors (10K Ohm NTC Type III)	C7031 Sensors (1097 Ohms PTC)	C7041 Sensors (20K ohm NTC)
At 41°F (5°C)	25,392	23,467	1,020	54,200
At 50°F (10°C)	19,901	18,789	1,039	41,758
At 59°F (15°C)	15,712	15,137	1,059	32,427
At 68°F (20°C)	12,493	12,268	1,078	25,370
At 77°F (25°C)	10,000	10,000	1,097	20,000
At 86°F (30°C)	8,057	8,196	1,117	15,856
At 95°F (35°C)	6,531	6,754	1,136	12,654

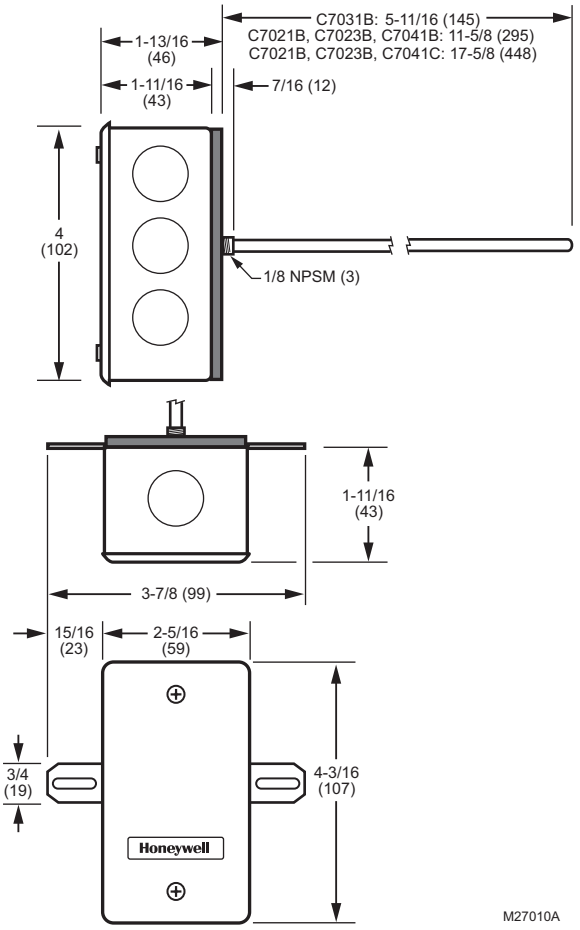

Fig. 1. C7021B/C, C7023B/C, C7041B/C dimensions in in. (mm).

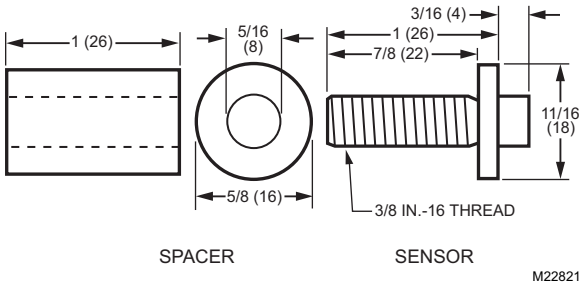

Fig. 2. Dimensions of C7021P, C7023P, C7041P in in. (mm)

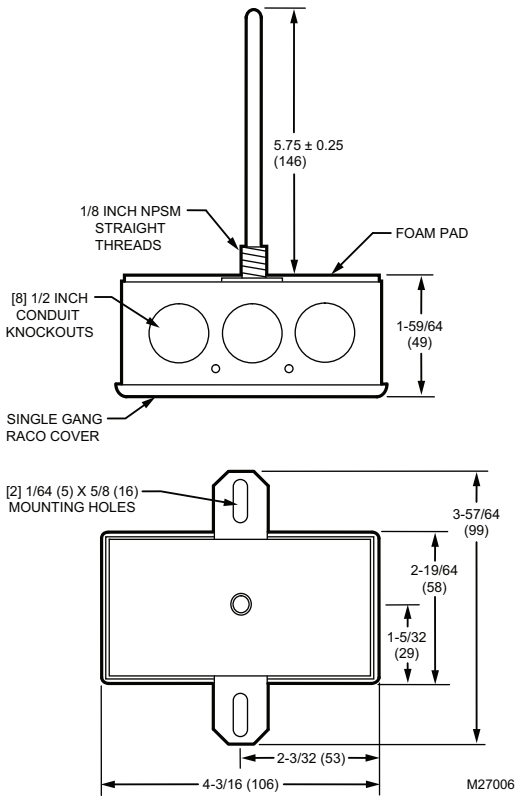

Fig. 3. C7031B dimensions in in. (mm)

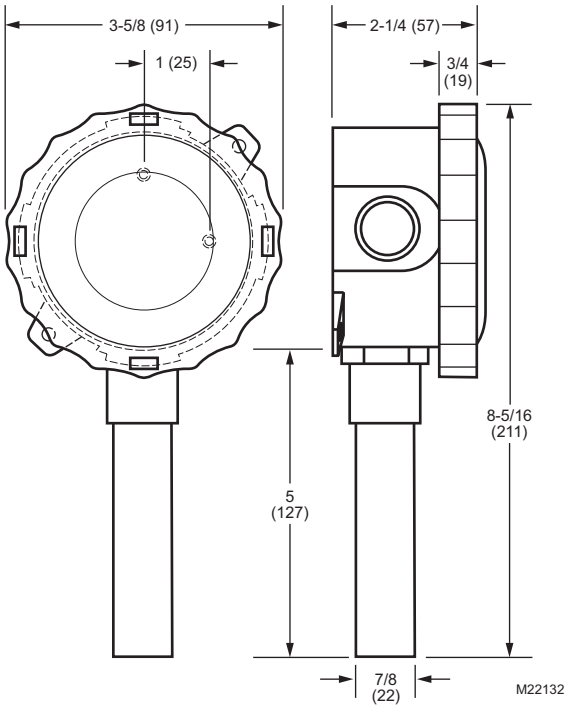

Fig. 4. C7031G, C7021F, C7023F, C7041F dimensions in in. (mm).

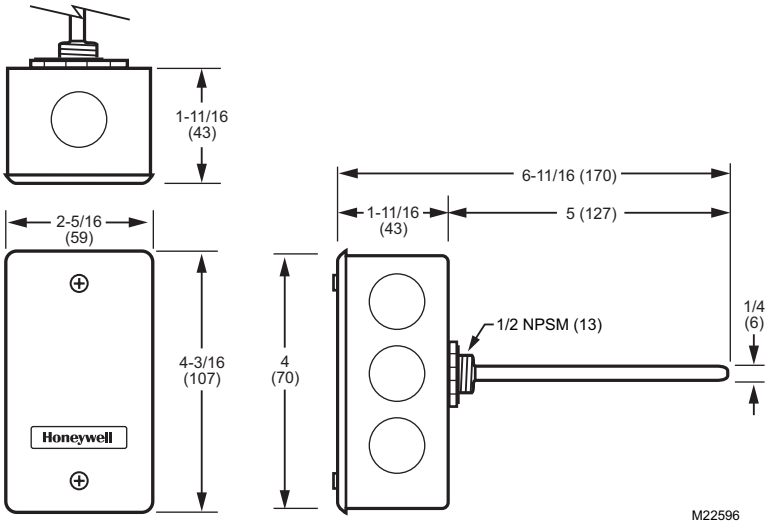

Fig. 5. C7021D, C7023D, C7031D, C7041D dimensions in in. (mm)

NOTE: The C7021D, C7023D, C7041D uses the 50001774-001 Well Assembly. See Fig. 4 for dimensions.

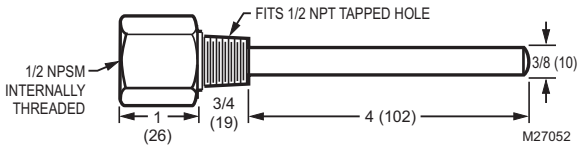

Fig. 6. 50001774-001 Immersion Well dimensions in in. (mm)

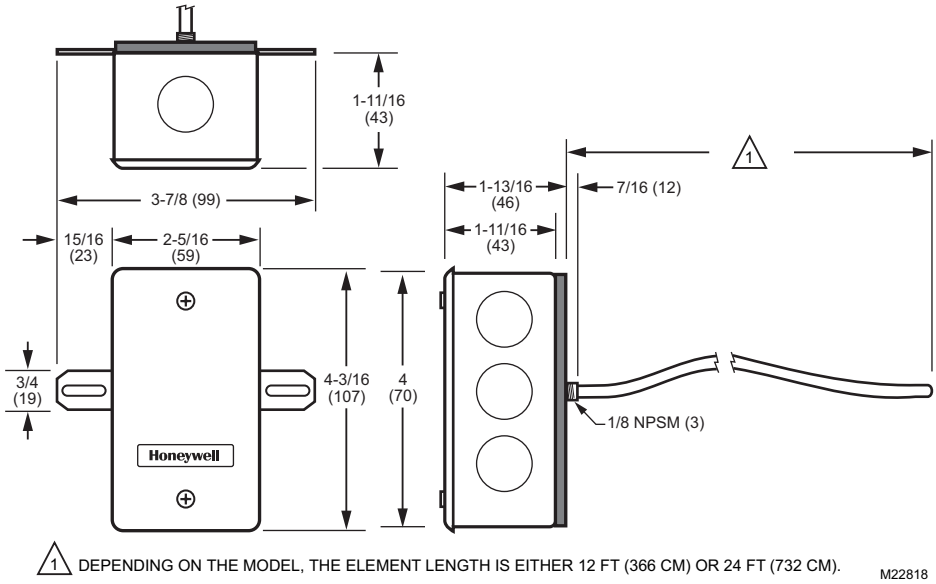

Fig. 7. C7021R, C7023R, C7041R dimensions in in. (mm).

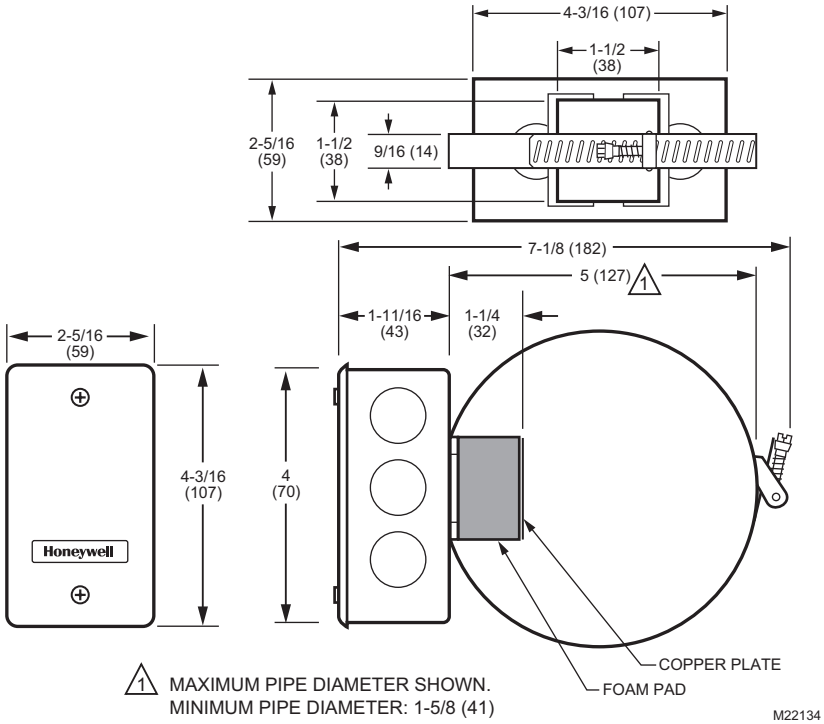

Fig. 8. C7021K, C7023K, C7041K dimensions in in. (mm).

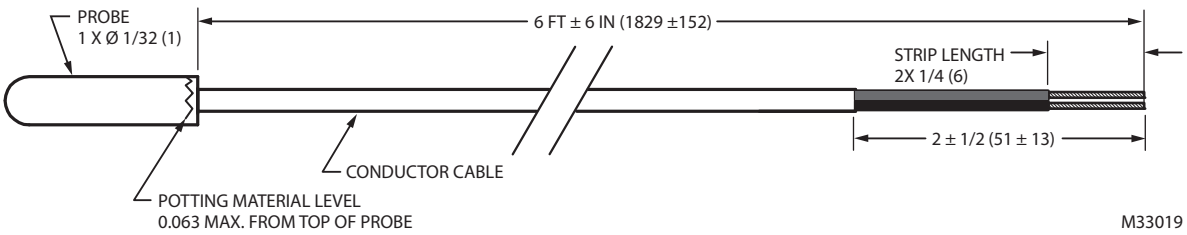

Fig. 9. C7021N, C7023N, C7041N dimensions in in. (mm).

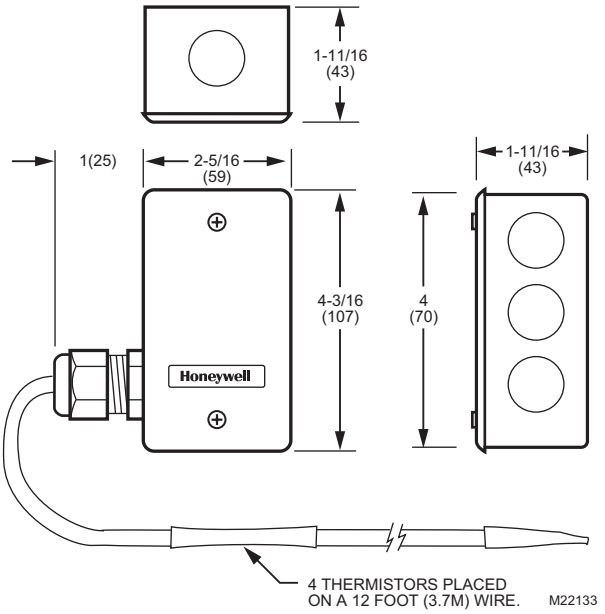

Fig. 10. C7021J, C7023J, C7031J, C7041J dimensions in in. (mm).

INSTALLATION

When Installing this Product...

1. Read these instructions carefully. Failure to follow them could damage the product or cause a hazardous condition.
2. Check the ratings given in the instructions and on the product to make sure the product is suitable for your application.
3. Installer must be a trained, experienced service technician.
4. After installation is complete, check out product operation as provided in these instructions.

⚠ CAUTION

Electrical Shock or Equipment Damage Hazard. Can shock individuals or short equipment circuitry.

Disconnect power supply before installation.

Mounting

The method of mounting depends on the particular application of the temperature sensor. The following procedures include outdoor, duct, immersion well and strap-on applications. Also refer to the instructions for the electronic control.

Outdoor Mounting (C7031G, C7021F, C7023F, C7041F)

The C7031G, C7021F, C7023F and C7041F sense outdoor air temperature. Mount this control where it can sense average outdoor air temperature. Normally, the north side of a building provides a suitable location.

NOTE: These sensors are weatherproof for outdoor use. Knockouts allow for 1/2 in. conduit connection.

1. Remove and set aside the wiring box cover.
2. Mount the sensor to standard 1/2 in. conduit.

   NOTE: Mount sensor so that the element points down.
3. Make wiring connections using two wire nuts.
4. Reattach the wiring box cover.

Duct Mounting

The C7031B, C7031J, C7021B/C/J, C7023B/C/J, C7041B/C/J can be mounted in a duct to sense air temperature.

IMPORTANT

Select a spot for the sensor where it will be exposed to average duct air temperature. Avoid locations where stratification can cause sensing errors.

C7021B,C/C7023B/C, C7041B/C MOUNTING

1. Cut a hole in the duct just large enough to accept the sensing element.
2. Use the sensor case to mark the locations of the pilot holes for the mounting screws.
3. Drill the pilot holes and fasten the sensor to the duct.

C7021J, C7023J, C7031J, C7041J MOUNTING

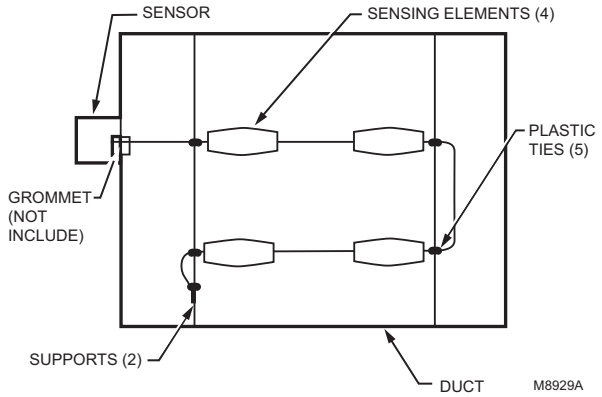

Fig. 11. Duct cross section showing method of installing C7021J, C7023J, C7031J, C7041J Averaging Electronic Sensor.

1. Install two supports inside the duct to hold the averaging element.
2. Cut a 7/8 in. (22 mm) hole in the side of the duct to insert the averaging element.
3. Fasten the terminal box to the outside of the duct and thread the element through the hole and into the duct.
4. Use plastic wire ties to fasten the element to supports. Seal the hole around the element with a rubber grommet.
5. Secure the end of the element to the duct on the support to prevent continuous flexing or abrasion.

IMPORTANT

To assure that the C7021J, C7023J, C7031J, C7041J senses average duct temperature, position the temperature elements approximately as shown in Fig. 11. Do not allow the elements to touch or be close to the duct sides.

NOTE: When the sensor is used as a deck sensor in a multizone system, be sure to space the elements equally in the duct midstream as shown in Fig. 12.

Install one C7021J, C7023J, C7031J, C7041J just upstream from the cold deck zone dampers and the other C7021J, C7023J, C7031J, C7041J upstream from the hot deck zone dampers. Position the thermistors to sense the average deck temperature.

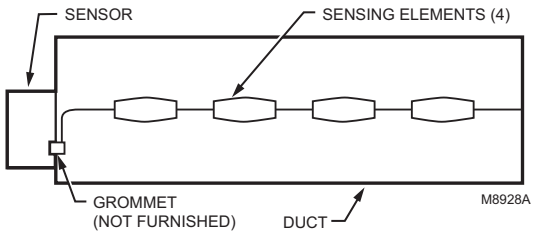

Fig. 12. Duct cross section showing method of installing C7021J, C7023J, C7031J, C7041J in a multizone system.

C7021R, C7023R, C7041R MOUNTING

1. Install two supports inside the duct to hold the averaging element.
2. Cut a 7/8 in. (22 mm) hole in the side of the duct.
3. Insert the averaging element into the duct through the hole.
4. Fasten the terminal box to the outside of the duct and thread the element through the hole and into the duct.
5. Use plastic wire ties to fasten the element to the supports. Seal the hole around the element with a rubber grommet.
6. Secure the end of the element to the duct on the support to prevent continuous flexing or abrasion.

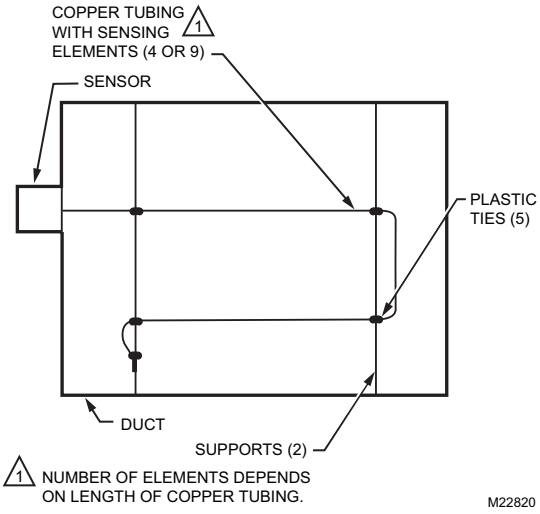

Fig. 13. Duct cross section showing method of installing C7021R, C7023R, C7041R Averaging Electronic Sensor.

IMPORTANT

To ensure that the C7021R, C7023R, C7041R senses average duct temperature, position the temperature elements approximately as shown in Fig. 13. Do not allow the elements to touch or be close to the duct sides.

NOTE: When the sensor is used as a deck sensor in a multizone system, be sure to space the elements equally in the duct midstream as shown in Fig. 14.

Install one C7021R, C7023R, C7041R just upstream from the cold deck zone dampers and the other C7021R, C7023R, C7041R upstream from the hot deck zone dampers. Position the thermistors to sense the average deck temperature.

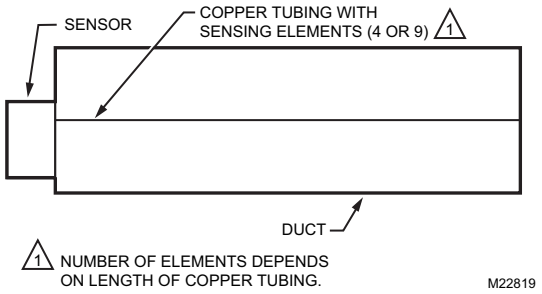

Fig. 14. Duct cross section showing method of installing C7021R, C7023R, C7041R in a multizone system.

Immersion Well Mounting (C7021D, C7023D, C7031D, C7041D)

The C7031D Sensor includes an immersion well. The C7021D, C7023D, and C7041D sensors do not include a well. For the C7021D, C7023D, and C7041D, order the well as an accessory (part no.: 50001774-001).

When used on a boiler, follow the manufacturer instructions for location. If a tapped hole is not provided for the immersion well, provide one as follows:

1. Drain boiler and drill a 23/32 in. (18 mm) hole at the selected location.
2. Cut threads in the hole with a 1/2 in. (13 mm) by 14 NPT tap.

In other installations, mount the immersion well in an elbow with a heel outlet as shown in Fig. 15.

1. Drain the system, if you have not already done it, and open the tapped hole.
2. Put pipe joint compound on the threads of the immersion well and screw it into the tapped hole or elbow, tightening it securely.
3. Refill the system and check for leaks.

Mount the C7021D, C7023D, C7031D and C7041D into the well:

NOTE: Mounting using previously installed Honeywell wells (part no.: 32005960-001) requires an adapter (part no.: 50001775-001).

1. When an adapter is required, first thread it into the well no more than one or two turns.
2. Slide the sensor into the well.
3. Rotate the sensor to thread it tightly into the adapter and the adapter tightly into the well.

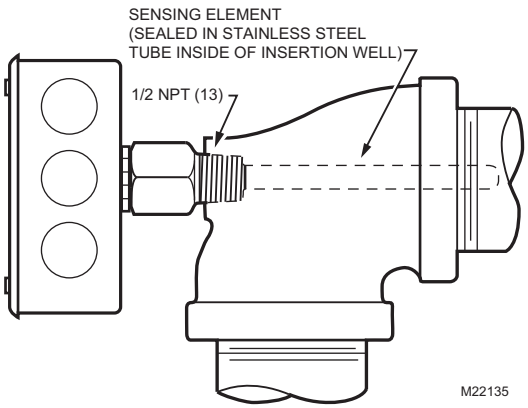

Fig. 15. Method of mounting C7021D, C7023D, C7031D, C7041D Sensor.

Strap-On Mounting (C7021K, C7023K, C7041K)

Strap-on mounting is well-suited for retrofit applications where installation costs can be reduced by not draining the system. The C7021K, C7023K, C7041K Sensor mounts on metal pipes from 1-5/8 inch to five inches in diameter using the straps supplied. Clean the surface of the pipe where the sensor makes contact before mounting (remove insulation from the pipe at the point of installation if necessary). Thermal compound is recommended with the strap-on C7021K, C7023K, C7041K Sensor. Locate the sensor on the discharge pipe within 3 feet (0.9m) of the boiler. See Fig. 16.

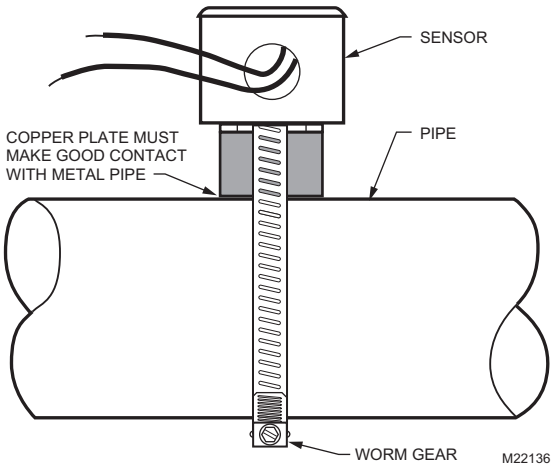

Fig. 16. Strap-on mounting of C7021K, C7023K, C7041K Sensor.

NOTE: Insulation around the contact area increases sensor accuracy.

Button Probe Mounting

The C7021P, C7023P, C7041P Button Probe Sensor design simplifies mounting into a variety of standard structural materials.

The locking nut can be used to secure the probe. See Fig. 18.

The plastic spacer helps insulate the probe from drywall, wood, or other material in which the probe is mounted. The spacer is sized to fit snugly into 1/2 in. metal conduit. See Fig. 17.

NOTES:
— The plastic spacer is threaded for easy installation.
— Use of both the locking nut and spacer requires cutting spacer to shorter length.

C7041P MOUNTING RECOMMENDATIONS

Determine the proper location based upon the following:
— Mount the probe to an inside wall approximately 54 in. (1372 mm) from the floor (or in the specified location) to allow exposure to the average zone temperature.
— Do not mount the probe to an outside wall, a wall containing waterpipes, or near air ducts.
— Avoid locations exposed to register discharge air, or radiation from lights, appliances, or the sun.

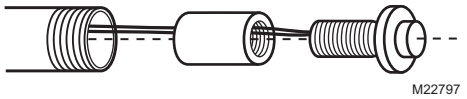

Fig. 17. Mounting sensor in conduit.

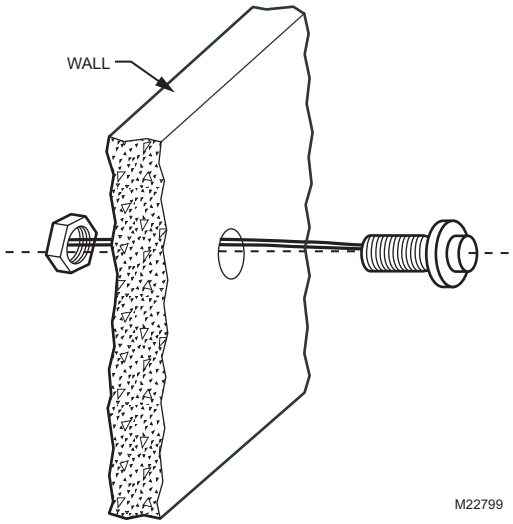

Fig. 18. Mounting sensor in wall with nut only.

Bullet Probe Sensor Mounting (C7021N, C7023N, C7041N)

The bullet probe sensor is a water-resistant sensor that provides a cost-effective solution for surface contact temperature measurement of conditioned water pipes, low pressure steam or refrigerant lines. These sensors are ideal for applications where immersion wells are not practical to install. These sensors can also be use to sense air temperature.

WIRING

⚠ CAUTION

Erratic System Operation Hazard.
Failure to follow proper wiring practices can introduce disruptive electrical interference (noise).

Keep wiring at least one foot away from large inductive loads such as motors line starters, lighting ballasts, and large power distribution panels.

Shielded cable is required in installations where these guidelines cannot be met.

Ground shield only to grounded controller case.

⚠ CAUTION

Electrical Shock or Equipment Damage Hazard.
Can shock individuals or short equipment circuitry.

Disconnect power supply before installation.

IMPORTANT

1. *All wiring must agree with applicable codes, ordinances and regulations.*
2. *Do not mount sensor in incorrect environment.*
3. *Wire according to the applicable controller instructions.*

OPERATION AND CHECKOUT

Operation

The C7041 Temperature Sensors are designed for use with XL500, XL100, XL50, XL15, XL10, and Honeywell LCBS Controllers or any controller requiring 20K ohm NTC non-linear input. As the temperature at the C7041 Sensor increases, the resistance of the sensor decreases, causing the controller to operate and offset the temperature change.

The C7021 Temperature Sensors are designed for use with the TB7600, TB7300, and TB7200 Series Communicating Thermostats or any controller requiring a 10K ohm NTC Type II input.

The C7023 Temperature Sensors are designed for use with WEBs-AX I/O Modules or any controller requiring a 10K ohm NTC Type III input.

Checkout

Refer to the applicable controller instructions when checking out the complete heating and cooling systems.

To check out the sensors, move the thermostat or remote setpoint potentiometer below the temperature of the cooling or heating medium. Watch the motor, valve or damper for the correct movement.

By using this Honeywell literature, you agree that Honeywell will have no liability for any damages arising out of your use or modification to, the literature. You will defend and indemnify Honeywell, its affiliates and subsidiaries, from and against any liability, cost, or damages, including attorneys' fees, arising out of, or resulting from, any modification to the literature by you.

Automation and Control Solutions
Honeywell International Inc.
1985 Douglas Drive North
Golden Valley, MN 55422
customer.honeywell.com

Honeywell

® U.S. Registered Trademark
© 2015 Honeywell International Inc.
63-2590—06 M.S. Rev. 06-15
Printed in United States

Attachment 3-2

1. Description of Methodology

Description of the methodology used to calculate the useful thermal energy pursuant to Puc 2506.04

Equations 1, 2, and 3 show the proposed method for calculating useful thermal energy.

Q = (QS - QC) * 0.98 * t	Equation 1
QS = hS * (Flow)	Equation 2
QC = hC * (Flow)	Equation 3

Where:

- **QS (Btu/hr)** Rate of energy in steam delivered by the biomass unit to the main header, as determined by direct measurement of supply steam temperature (Sensor TS), and supply steam pressure (PS).
- **QC (Btu/hr)** Rate of energy in pumped condensate entering the boiler, as determined by direct measurement of the condensate temperature (TC), and condensate pressure (PC).
- **Flow (lb/hr)** steam flow is measured by a temperature compensated steam mass flow meter. Steam mass flow exiting the boilers and condensate mass flow entering the boilers are identical as the system is closed between these points. The values are measured each minute, averaged over each hour, and then the hour's average is used for calculation.
- **hS and hC (Btu/lb)** are the specific enthalpy of steam and of condensate, respectively. The values are determined by direct pressure and temperature measurements as noted above, and using IAPWS steam tables.
- **t (hr)** is time in hours. Where readings are taken more frequently, the values are converted to hourly. All parameters are recorded hourly by the Building Energy Management System.
- The factor of 0.98 accounts for the 2% reduction in REC generation (discount factor) for parasitic load.

Fossil Fuel Boilers

Oil Boilers 1 and 2 are fired on fuel oil. As shown in the schematic, thermal energy produced by these boilers is not metered. The controls system will not operate the biomass boiler when the oil boilers are operating.

Discount Factors for Calculating RECs

The metering and recording equipment meets the requirement of ±3.0% or better accuracy as called for by PUC 2506.04{f}{1}, and thus, no discount for equipment accuracy. The discount factor for parasitic load is assumed to be 2% (per Puc 2506.05(f)(3)) as shown in Equation 1.

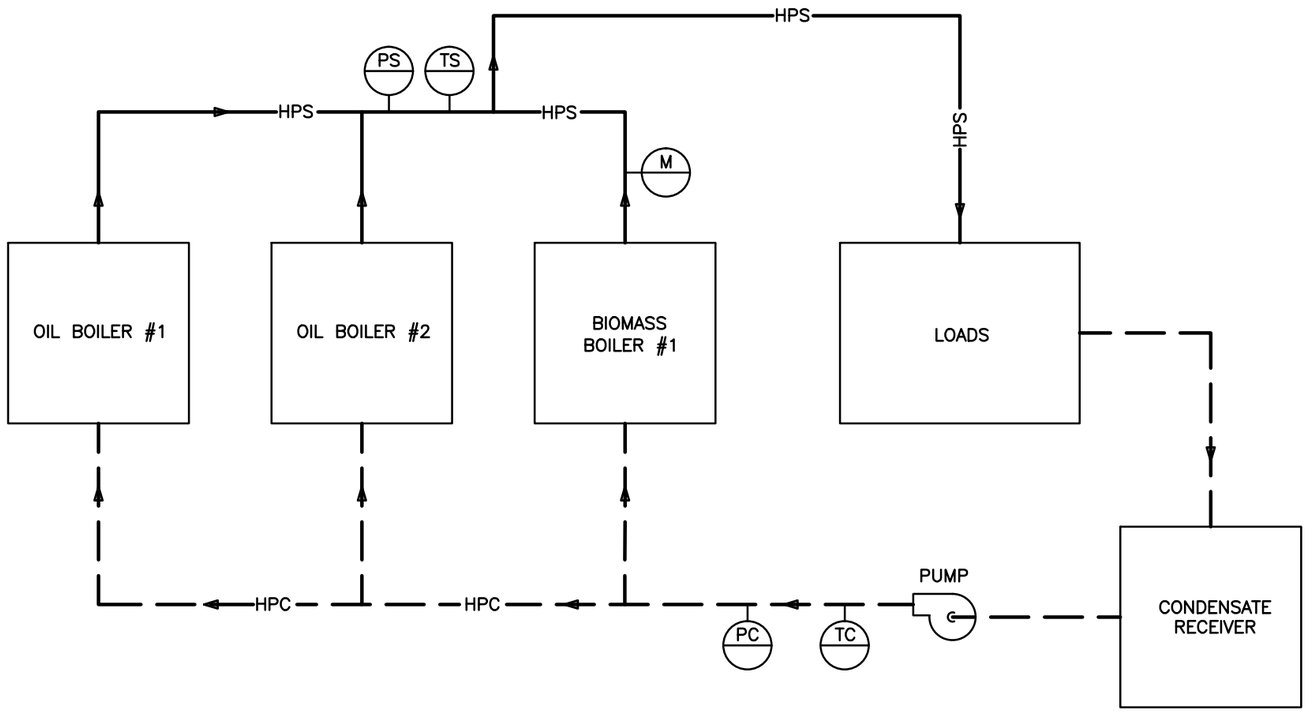

LEGEND

- M — STEAM MASS FLOW METER
- PC — CONDENSATE PRESSURE SENSOR
- TC — CONDENSATE TEMPERATURE SENSOR
- TS — STEAM TEMPERATURE SENSOR
- PS — STEAM PRESSURE SENSOR
- HPS — HIGH PRESSURE STEAM
- HPC — HIGH PRESSURE CONDENSATE
- FLOW ARROW

YEATON ASSOCIATES, INC.
66 Jackson Street
Littleton, NH 03561
603.444.6578
www.yeatonassociates.com
14093M

SENSOR LOCATION FLAT FLOW – MECHANICAL ANDROSCOGGIN VALLEY HOSPITAL

ANDROSCOGGIN VALLEY HOSPITAL
59 PAGE HILL ROAD, BERLIN, NH

DATE: 09–02–15
SCALE: N.T.S.
DRAWN BY: CSR

SKETCH NO.: M–1

Attachment 3-3

1. Calibration

Metering System Calibration

System Component	Recommendation	Source Document
Mass Flow Meter	Calibration certificate from factory. No field calibration required	Attachment 3.1
Feedwater Pressure Sensor	Factory calibration. No field calibration required.	Attachment 3.1 and personal communication between Kele and Yeaton on 9/2/2015.
Feedwater Temperature Sensor	No calibration of the device is possible. Long term drift calibration/maintenance through controller software is typically not necessary.	Attachment 3.1
Supply Steam Pressure Sensor	Calibration certificate from factory. No field calibration required	Attachment 3.1
Supply Steam Temperature Sensor	No calibration of the device is possible. Long term drift calibration/maintenance through controller software is typically not necessary.	Attachment 3.1