DE 12-259

HYDRO MANAGEMENT GROUP, LLC
C/O ESSEX HYDRO ASSOCIATES, LLC
55 UNION STREET, 4TH FL
BOSTON, MA 02108

TELEPHONE: +617-367-0032
E-MAIL: AL@ESSEXHYDRO.COM

August 20, 2012

Ms. Debra A. Howland
Executive Director and Secretary
State of New Hampshire
Public Utilities Commission
21 S. Fruit St, Suite 10
Concord, NH 03301-2429

Attn: Executive Director and Secretary Howland

Dear Ms. Howland,

Pursuant to New Hampshire Administrative Code Puc 2500 Rule, Puc 2505.02 Application Requirements Laws of 2012, Chapter 0272, please find included with this letter an application for the qualification of Rivermill Hydroelectric Inc's River Mill hydroelectric project as a New Hampshire Class IV RPS Resource.

To clear up any discrepancies within the application, please note that Hoskins Diversified Industries, the original exemptee, was authorized by the FERC to rehabilitate an existing 150-kW generating unit and install an additional 175-kW generating unit. The existing 150-kW generating unit was subsequently removed and the 175-kW unit was installed. Additionally, please note that the River Mill interconnection agreement was drafted by the New England Power Company ("NEP") to read 180-kW versus the 175-kW installed capacity due to NEP's desire to account for River Mill hydro's maximum potential load on their system. The attached application has been drafted to reflect these characteristics.

An electronic copy of this application was emailed to you at executive.director@puc.nh.gov and Barbara Bernstein at barbara.bernstein@puc.nh.gov on Monday, August 20th and three hard copies were hand delivered to your attention at the New Hampshire PUC on Tuesday, August 21st, 2012.

Thank you in advance for review of this application and please contact me at 617-367-0032 or al@essexhydro.com with any questions

Sincerely,

Rivermill Hydroelectric Inc.
by Hydro Management Group, its agent
as aggregator

Andrew Locke
Vice President

NHPUC AUG21'12 PM 3:00

State of New Hampshire
Public Utilities Commission

21 S. Fruit Street, Suite 10, Concord, NH 03301-2429

APPLICATION FORM FOR

RENEWABLE ENERGY SOURCE ELIGIBILITY FOR CLASS IV
HYDRO SOURCES WITH A TOTAL NAMEPLATE CAPACITY OF ONE MEGAWATT OR LESS

Pursuant to New Hampshire Administrative Code Puc 2500 Rules, Puc 2505.02 Application Requirements
Laws of 2012, Chapter 0272

- Please submit one (1) original and two (2) paper copies of the completed application and cover letter to:

Debra A. Howland
Executive Director
New Hampshire Public Utilities Commission
21 South Fruit Street, Suite 10
Concord, NH 03301-2429

- Send an electronic version of the completed application and the cover letter electronically to executive.director@puc.nh.gov.

The cover letter must include complete contact information and clearly state that the applicant is seeking certification as a Class IV source. Pursuant to Chapter 362-F:11 I, the Commission is required to render a decision on an application within 45 days upon receiving a completed application.

If you have any questions please contact Barbara Bernstein at (603)271-6011 or Barbara.Bernstein@puc.nh.gov.

Please provide the following:

1. Applicant Name: Hydro Management Group LLC as agent for Rivermill Hydroelectric Inc

Mailing Address: c/o Essex Hydro Associates, L.L.C. 55 Union Street, 4th Floor

Town/City: Boston State: MA Zip Code: 02108

Primary Contact: Andrew Locke

Telephone: (617) 367-0032 Cell: (617)-367-0032

Email address: al@essexhydro.com

2. Facility Name: River Mill Hydroelectric Facility

(physical address) N/A

Town/City: Lebanon State: NH Zip Code: 03766

If the facility does not have a physical address, the Latitude 43°38'16.81"N & Longitude 72°15'28.83"W

(To qualify the electrical production for RECs, the facility must be registered with the NEPOOL – GIS). Contact information for the GIS administrator follows:

James Webb, Registry Administrator, APX Environmental Markets
224 Airport Parkway, Suite 600, San Jose, CA 95110
Office: 408.517.2174, jwebb@apx.com

3. The facility's ISO-New England asset identification number, if available. 795

4. The facility's GIS facility code, if available. MSS795

5. A description of the facility including the following:
   5.a. The gross nameplate capacity 0.175MW
   5.b. The facility's initial commercial operation date 06/01/1989
   5.c. The date the facility began operation, if different than the operation date _____
   5.d. A complete description of the facility including related equipment

The River Mill hydroelectric project ("the project") is located on the Mascoma River, in the city of Lebanon, Grafton County, New Hampshire. The project is located roughly three miles above the confluence of the Mascoma and the Connecticut rivers and includes a 5-acre impoundment at a surface elevation of 502.7 feet m.s.l.

The project is operated as a run-of-river facility. Outflows from the project equal inflows on an instantaneous basis, and water levels above the dam are maintained at the crest of the dam and are not drawn down for the purposes of generating power. The exemptee is required to maintain a minimum flow of 94 cfs or inflow to the project area, whichever is less at all times either through the project or over the dam to maintain water quality and protect acquatic habitat. Project works consist of: (1) a 285-foot-long and 21.7-foot-high dam have two 123-foot-long spillway sections with spillway crest elevation 502.7 feet m.s.l.; (2) 17-inch-high flashboards; (3) an existing concrete powerhouse having one Westinghouse generating unit with a total installed capacity of 175 kilowatts (4) a 400-foot-long transmission line; and (5) appurtenant facilities.

The project is located on the Mascoma River on the outskirts of the city of Lebanon. The project utilizes a previously existing impoundment and the plant is unmanned, but operation is monitored on a 24/7 basis.

6. A copy of all necessary state and federal (FERC) regulatory approvals as ***Attachment A***.

7. A copy of the title page of the Interconnection Agreement between the applicant and the distribution utility, the page(s) that identifies the nameplate capacity of the facility and the signature pages. *Please provide this information as* ***Attachment B.***

8. A description of how the generation facility is connected to the distribution utility.

The River Mill 175 kW hydroelectric generating facility is interconnected with the electric system of the New England Power Company ("NEP") in accordance with applicable New Hampshire Public Utilities Commission ("NHPUC") Orders and federal law. The delivery point is that point at which the facility interconnects with the three-phase sixty-hertz alternating current electric system of NEP. All electric energy delivered to NEP's system from the Facility is 208Y/120, three phase, sixty hertz.

Under this Agreement, the Interconnector shall receive and pay for the services necessary for the purpose of connecting, and providing the continued connection of, the River Mill Facility with the NEP electrical system, including Pool Transmission Facilities ("PTF") as defined by NEPOOL, and non-PTF.

9. A statement as to whether the facility has been certified under another non-federal jurisdiction's renewable portfolio standard and proof thereof.

The River Mill Hydroelectric Facility (the "Facility") is not currently qualified under another non-federal jurisdiction's renewable portfolio standard.

10. A statement as to whether the facility's output has been verified by ISO-New England.

The facility's output is verified by ISO-New England who is responsible for reporting the Facility's generation to the NEPOOL GIS.

11. An affidavit by the applicant attesting that the contents of the application are accurate. *Use either the Affidavit at the bottom of this page, or provide a separate document as* ***Attachment C.***

12. The name and telephone number of the facility's operator, **if different from the owner**.

Facility Operator Name: Scott Edwards, President, Rivermill Hydroelectric, Inc.

Phone: (978) 265-2550

13. Other pertinent information that you wish to include to assist in classification of the facility provide as **Attachment D.**

CHECK LIST: The following has been included to complete the application:	**YES**
• All contact information requested in the application.	x
• A copy of all necessary state and federal (FERC) regulatory approvals as **Attachment A.**	x
• A copy of the title page of the Interconnection Agreement between the applicant and the distribution utility, the page(s) that identifies the nameplate capacity of the facility and the signature pages as **Attachment B**.	x
• A signed and notarized attestation or **Attachment C.**	x
• A GIS number has been provided or has been requested.	x

• Other pertinent information has been provided (if necessary) as **Attachment D.**	N/A
• This document has been printed and notarized.	x
• The original and two copies are included in the packet mailed to Debra Howland, Executive Director of the PUC.	x
• An electronic version of the completed application has been sent to executive.director@puc.nh.gov .	x

AFFIDAVIT

The Undersigned applicant declares under penalty of perjury that contents of this application are accurate.

Applicant's Signature _____ Date 8/20/2012

Subscribed and sworn before me this 20th Day of August (month) in the year 2012

County of Suffolk State of Massachusetts

Stephen J. Hedley
Notary Public/Justice of the Peace

My Commission Expires July 29, 2016

Attachment A

River Mill Hydroelectric Project
(MSS795)

ORDER GRANTING EXEMPTION FROM LICENSING (FERC No. 9403)
dtd September 21, 1988

Hoskins Diversified Industries

Project No. 9403-001

FEDERAL ENERGY REGULATORY COMMISSION - Office Director

44 F.E.R.C. P62,273; 1988 FERC LEXIS 2371

September 21, 1988

ACTION:
[**1]

Order Granting Exemption from Licensing (5 MW or Less)

JUDGES:

Dean L. Shumway, Director, Division of Project Review.

OPINION:
[*63,344]

On November 27, 1987, Hoskins Diversified Industries filed an application to exempt the HDI Mascoma Dam Project from the licensing requirements set forth in Part I of the Federal Power Act. The proposed small hydropower project is described in the attached public notice. The comments of interested agencies and individuals, including the U.S. Fish and Wildlife Service and the state fish and wildlife agency, have been fully considered in determining whether to issue this exemption from licensing.

Article 10 requires the exemptee to prepare and implement a plan to control erosion and dust, stabilize slopes, and minimize the quantity of sediment or other potential water pollutants resulting from construction and operation of the project. Article 11 requires the exemptee to provide for the protection of archeological and historic sites. Article 12 is included to provide for free, public recreational access to project lands and waters, within safety limitations. The bases for the inclusion of articles 10, 11 and 12 are contained in the environmental [**2] assessment attached to this order.

Article 2 of this exemption requires compliance with the terms and conditions prepared by federal or state fish and wildlife agencies to protect fish and wildlife resources. These mandatory terms and conditions are contained in any attached letters [omitted in printing] commenting on the exemption application. If contested, the Commission will determine whether any mandatory term or condition is outside the scope of article 2.

After considering the mandatory terms and conditions designed to protect fish and wildlife resources, the environmental information in the exemption application, the staff's independent assessment, and other public comments, the Director finds that issuance of this order is not a major federal action significantly affecting the quality of the human environment.

The Director orders:

(A) The HDI Mascoma Dam Project is exempted from the licensing requirements of Part I of the Federal Power Act, subject to the attached standard articles [omitted in printing]. *See* section 4.106 of the Commission's regulations and the following additional articles:

Article 10. Before commencing any ground-disturbing or [**3] spoil-producing activities, the exemptee, in consultation and cooperation with the appropriate federal, state, and local agencies (including the Soil Conservation Service and any federal agency with managerial authority over any part of the project lands), shall prepare a plan to control erosion and dust, stabilize slopes, and minimize the quantity of sediment or other potential water pollutants resulting from construction and operation of the project. The plan shall identify critical areas, include functional design drawings and map locations of control measures, and establish schedules for implementation, monitoring, maintenance, and periodic review.

The exemptee may commence ground-disturbing or spoil-producing activities 30 days after submitting the final plan to the consulted agencies, or sooner if the plan is approved by the Soil Conservation Service and any federal agency with managerial authority over any part of project lands. Any consulted agency that objects to the exemptee's final plan should notify the Commission, specify the objection, and recommend alternative measures. The Commission reserves the right to modify the final plan.

Article 11. The exemptee, before [**4] starting any ground-disturbing or land-clearing activities within the project boundaries, other than that specifically authorized in this exemption, shall consult the New Hampshire State Historic Preservation Officer (SHPO) about the need for a cultural resources survey and salvage work. The exemptee shall file with the Commission documentation of the nature and extent of consultation, including a cultural resources management plan and a schedule to conduct the necessary investigation, together with a copy of a letter from the SHPO commenting on the plan and schedule, 60 days before starting any such ground-disturbing or land-clearing activities. The exemptee shall make funds available in a reasonable amount for the required work. If the exemptee discovers any previously unidentified archeological or historic sites during the course of construction or developing project works or other facilities at the project, the exemptee shall stop all construction and development activities in the vicinity of the sites and shall consult a qualified cultural [*63,345] resources specialist and the SHPO concerning the eligibility of the sites for listing in the *National Register of Historic* [**5] *Places* and any measures needed to avoid the sites or to mitigate effects on the sites. If the exemptee and the SHPO cannot agree on the amount of money to be spent for project-specific archeological and historical purposes, the Commission reserves the right to require the exemptee to conduct the necessary work at the exemptee's own expense.

Article 12. The exemptee shall allow the public free access, to a reasonable extent, to project waters and adjacent project lands for the purpose of full public use of such land and water for navigation and for outdoor recreational purposes. The exemptee may reserve from public access such portions of the project waters, adjacent lands, and project facilities as may be necessary for the protection of life, health, and property.

(B) Article 2 of this exemption is amended to include the National Marine Fisheries Service as a fish and wildlife agency that can provide terms and conditions.

(C) The exemptee shall serve copies of any Commission filing required by this order on any entity specified in this order to be consulted on matters related to that filing. Proof of service on these entities must accompany the filing with the Commission. [**6]

(D) This order is issued under authority delegated to the Director and is final unless appealed to the Commission within 30 days from the date of this order.

APPENDIX:

Appendix A

Notice of Application

(Issued May 24, 1988)

a. Type of Application: Exemption Under 5 MW

b. Project No.: 9403-001

c. Date Filed: November 27, 1987

d. Applicant: Hoskins Diversified Industries

e. Name of Project: HDI Mascoma Dam

f. Location: On the Mascoma River in the City of Lebanon, Grafton County, New Hampshire

g. Filed Pursuant to: Section 408 of the Energy Security Act of 1980, 16 U.S.C. §§ 2705 and 2709

h. Applicant Contact: Mr. Matthew Bonaccorsi, Timothy Buzzell & Associates, Inc., Lebanon, NH 03766, (603) 448-3245

i. FERC Contact: Charles T. Raabe, (202) 376-9778

j. Comment Date: July 5, 1988

k. Description of Project: The proposed project would consist of: (1) an existing 285-foot-long 21.7 foot-high timber, rock and concrete dam having two 123-foot-long spillway sections with spillway crest elevation 502.7 feet m.s.l. surmounted by 17-inch-high flashboards and separated by a waste-gate section; (2) an existing reservoir having a 5 acre [**7] surface area and a 20 acre-foot storage capacity at surface elevation 502.7 feet m.s.l.; (3) an existing intake structure and pressure box; (4) an existing powerhouse, which is an integral part of a mill complex, having an existing 150-kW generating unit to be rehabilitated and a proposed 175-kW generating unit, both to be operated at a 14.4-foot head; (5) an existing 100-foot-long tailrace, to be enlarged, having surface elevation 488.3 feet m.s.l. (6) a proposed 400-foot-long transmission line and a transformer; and (7) appurtenant facilities.

The application was filed during the term of applicant's preliminary permit. Applicant estimates that the annual energy production would be 1,300,000 kWh. The project would be operated run-of-river.

[Note: Remainder of notice omitted in printing.]

Environmental Assessment

Federal Energy Regulatory Commission

Office of Hydropower Licensing

Division of Project Review

Date: August 30, 1988

Project name: HDI Mascoma Dam

FERC Project No. 9403-001

A. Application

1. Application type: 5 MW Exemption

2. Date filed with the Commission: November 27, 1987

3. Applicant: Hoskins Diversified Industries

4. Water body: [**8] Mascoma River; River basin: Connecticut

5. Nearest city or town: Lebanon (*See* figure 1 and 2) [SEE MATERIALS IN ORIGINAL]

6. County: Grafton; State: New Hampshire

7. Federal lands affected: No

B. Purpose and Need for Action

1. Purpose.

The purpose of the proposed project is to generate electrical power that would be sold to a local utility.

2. Need for power.

Under section 213 of the Public Utilities Regulatory Policies Act (PURPA), the authority of the Commission to grant an exemption from licensing is not limited by a determination of the need for power. (*See Briggs Hydroelectric,* 32 FERC P61,399 (1985). *See also David Cereghino,* 35 FERC P61,067 [1986]). [*63,346]

C. Proposed Project and Alternatives

1. Description of the proposed action. (*See* figure 3.) [SEE MATERIAL IN ORIGINAL]

The proposed project would consist of: (1) an existing 285-foot-long rock and concrete dam with two 123-foot-long spillway sections, a spillway crest elevation of 502.7 feet mean sea level (m.s.l.), and 17-inch-high flashboards separated by a waste-gate section; (2) an existing 5-acre reservoir; (3) an existing [**9] intake structure and pressure box; (4) an existing powerhouse that is part of a mill complex; (5) an existing 150-kilowatt (kW) generating unit that would be rehabilitated; (6) a proposed 175-kW generating unit; (7) an existing 100-foot-long tailrace that would be enlarged; (8) a proposed 400-foot-long transmission line; and (9) appurtenant facilities. The project would be operated as a run-of-river facility.

2. Applicant's proposed mitigative measures.

a. Construction.

Hoskins Diversified Industries (Hoskins) would use standard erosion control measures during the construction of the project.

b. Operation.

Hoskins would operate the project as a run of river facility.

3. Fish and wildlife agencies' terms and conditions for exemption from licensing (Federal Power Act).

The agencies listed below have provided terms and conditions for the protection of fish and wildlife resources.

Agency -- Attachment -- Date of letter

New Hampshire Fish and Game Department -- A -- 6/29/88

Department of the Interior -- B -- 7/15/88

Remarks: The following is a summary of the fish and wildlife terms and conditions listed in the attachments.

Terms and conditions provided [**10] *by the New Hampshire Fish and Game Department (FGD) (attachment A)*

(a) The project must operate as an instantaneous run-of-river facility or release a flow of 94 cubic feet per second (cfs) or inflow, whichever is less.

(b) The exemptee must install downstream and/or upstream fish passage facilities when deemed necessary by the FGD, National Marine Fisheries Service (NMFS) and/or the U.S. Fish and Wildlife Service (FWS).

Terms and conditions provided by Department of the Interior (Interior) (attachment B)

(a) The exemptee shall install fish passage facilities when directed by FWS and/or FGD.

(b) The project shall be operated as an instantaneous run-of-river facility.

(c) The exemptee shall prepare and submit a plan to the FWS for the monitoring of flows immediately downstream of the project.

4. Alternatives to the proposed project.

a. No reasonable action alternatives have been found.

b. Alternative of no action.

No action, denial of the exemption, would preclude the applicant from constructing the proposed project. No action would involve no alterations to the existing environment and would preclude the applicant from producing electrical power at the [**11] site.

D. Consultation and Compliance

1. Fish and wildlife agency consultation (Fish & Wildlife Coordination Act).

a. U.S. Fish & Wildlife Service: Yes.

b. State(s): Yes.

c. National Marine Fisheries Service: Yes.

2. Section 7 consultation (Endangered Species Act).

a. Listed species: None.

b. Consultation: Not required.

Remarks: The FWS says that except for occasional transient individuals, no federally listed or proposed threatened or endangered species inhabit the project area (letter from Gordon E. Beckett, Supervisor, New England Area Office, Concord, New Hampshire, July 24, 1986).

3. Cultural resource consultation (Historic Preservation Act).

a. State Historic Preservation Officer (SHPO): Yes.

b. National Park Service (NPS): Yes.

c. *National Register* status: None.

d. Council:

e. Further consultation: Not required.

4. Recreational consultation (Federal Power Act).

a. U.S. Owners: No.

b. NPS: Yes.

c. State(s): Yes.

5. Wild and scenic rivers (Wild and Scenic Rivers Act).

Status: None.

6. Land and Water Conservation Fund lands and facilities (Land and Water Conservation Fund Act).

Status: None. [*63,347] [**12]

E. Comments

1. The following agencies and entities provided comments on the application in response to the public notice dated 5/24/88.

Commenting agencies and other entities	*Date of letter*
New Hampshire Fish and Game Department	6/29/88
Department of the Interior	7/15/88

2. The applicant did not respond to the comments.

F. Affected Environment

1. General description of the locale.

a. Description of the Connecticut River Basin.

The Mascoma River, situated in west-central New Hampshire, is a tributary of the Connecticut River. The topography of the watershed is characterized by upland hills and peaks in the northern and eastern portions of the watershed and by more gently rolling hills in the western portions of the watershed adjacent to the Connecticut River.

The Connecticut River Basin (CRB) is the largest river basin in New England (figure 1). Extending from the northernmost part of New Hampshire to Long Island Sound the CRB has a maximum length in a north-south direction of approximately 280 miles and a maximum width of approximately 62 miles. The total drainage area of the basin is 11,765 square miles (Federal [**13] Power Commission, 1975).

The principal tributaries to the mainstem Connecticut River, by state, are: the Passumpsic, White, West, Ottauquechee, and Black Rivers in Vermont; the Ammonoosuc, Mascoma, Ashuelot, and Sugar Rivers in New Hampshire; the Millers, Deerfield, Chicopee, and Westfield Rivers in Massachusetts; and the Farmington River in Connecticut (Federal Power Commission, 1975).

The topography in the CRB varies from the rugged terrain of the White Mountains in New Hampshire to the lowland flood plains of Massachusetts and Connecticut. A forest-wildland landscape is the predominant pattern in the White Mountains, the Green Mountains, the headwater sections in New Hampshire and Vermont, and the western portion of the Pioneer Valley area of Massachusetts (Federal Power Commission, 1975). The lower half of the upper CRB between the towns of Lancaster and Hanover, New Hampshire, is predominantly farm and forest land; the middle and lower CRB includes forests and small towns. The remainder of the lower CRB is dominated by the urban-suburban centers of Springfield, Massachusetts, and Hartford, Connecticut (Federal Power Commission, 1975).

As of June 7, 1988 there were 33 [**14] existing exempted and 60 licensed projects in the Connecticut River Basin. One exemption application and 5 license applications within the Connecticut River Basin are pending before the Commission.

b. Target resource.

Atlantic salmon is an important resource in the CRB that may be cumulatively affected by multiple development within the basin. The staff based its selection of this important resource (target resource) on its regional significance and geographic distribution within the river basin.

Historically, large numbers of Atlantic salmon have ascended the Connecticut River and its tributaries to spawn. By the early 1800's federal and state agencies attempted to reintroduce salmon to the Connecticut River, but because of ineffective fish passage and unregulated fishing, the effort was largely unsuccessful. Then, in 1965, Congress passed the Anadromous Fish Conservation Act (Public Law 89-304), which enabled state resource agencies to obtain federal funds for the restoration of anadromous fish. In 1968, technical and policy committees were formed to manage the anadromous fisheries of the Connecticut River. Participants include FWS, NMFS, and the fishery management agencies [**15] for the states of New Hampshire, Vermont, Massachusetts, and Connecticut.

In 1980, FWS completed the plan for restoring Atlantic salmon to the Connecticut River Basin, which addresses restoration efforts through the year 2005. The plan was revised in 1982. The goal of the restoration program is to provide and to maintain a sport fishery for Atlantic salmon in the CRB and to restore and maintain a spawning population in selected tributaries.

The Atlantic salmon is currently the primary species for a major federal, state, and private sector restoration effort. As such, restoration of Atlantic salmon to the CRB has, and will continue to have, beneficial effects on other resources. Restoration of Atlantic salmon will continue to foster a

public awareness of water quality and will enhance the restoration of other anadromous fish such as the river herring and American shad (Federal Energy Regulatory Commission, 1986).

2. Descriptions of the resources in the project impact area (Source: Hoskins Diversified Industries, application, exhibit E, unless otherwise indicated).

a. Geology and soils: The geologic features of the area have been strongly influenced by glacial [*63,348] [**16] action. The topography of the area is hilly and rocky and the cover of glacial deposition is discontinuous, and ledges of metamorphic and igneous rock frequently protrude. The glacial deposits are characteristically sandy and rocky. Glacial features such as moraines, erratics, and eskers are evident in the region.

b. Streamflow:

low flow: 2 cfs; flow parameter: 59 year minimum

high flow: 5,480 cfs; flow parameter: 59 year maximum

average flow: 215 cfs.

c. Water quality: The Mascoma River, in the project area, is described as Class C waters by the state of New Hampshire. Class C waters are acceptable for recreational boating, fishing, and industrial water supply following treatment. The standards for dissolved oxygen (DO) in Class C waters requires no less than 5 milligrams per liter (mg/1) for warmwater fisheries and no less than 6 mg/1 for coldwater fisheries. The water quality of the project meets these state standards for DO.

d. Fisheries:

Anadromous: Absent.

Atlantic salmon are present in the mainstem Connecticut River but are not present in the Mascoma River. Atlantic salmon are scheduled to be restored to the Mascoma River sometime in the next 10 to 15 [**17] years (Stolte, 1982). Currently, salmon fry are not planted in the Mascoma River and fish passage facilities have been deferred at dams on the Mascoma River according to the Connecticut River Atlantic salmon restoration plan (Federal Energy Regulatory Commission, 1986).

Resident: Present.

A variety of game and nongame fish species inhabit the Mascoma River in the project area. Species include rainbow trout, brown trout, brook trout, common shiner, longnose dace, white sucker, fallfish, and slimy sculpin. FGD annually stocks brook, rainbow, and brown trout in the Mascoma River for a put-and-take fishery. The sites of these stockings are several miles up and downstream of the project dam, but FGD occasionally stocks trout in the immediate vicinity of the project.

e. Vegetation: Vegetation is limited in the immediate area of the project dam because it is within an industrial district of New Lebanon, but there are woodlots along the project reservoir.

Cover type -- Dominant species

deciduous forest -- red maple, red oak, sugar maple, eastern hemlock, and white pine

f. Wildlife: Wildlife that inhabit the project area include red squirrel, gray squirrel, raccoon, skunk, [**18] muskrat, white-tailed deer, red-tailed hawk, broad-winged hawk, pileated woodpecker, crow, red-backed salamander, and green frog.

g. Cultural:

National Register (listed and eligible) properties have not been recorded.

h. Visual quality: Characteristics of the area that contribute to the visual quality of the site include forested areas surrounding the reservoir and the Mascoma River as it flows through the town of Lebanon and over the dam.

i. Recreation: Fishing is the primary recreational activity in the immediate project area. Other recreational uses of the area are limited because of the site's industrial nature. The river below the Mascoma Lake Outlet dam, 4.5 miles upstream of the project, is a popular site for fishing and canoeing. There are several municipal athletic fields along the upstream end of the project reservoir.

j. Land use: The project is located in an industrial zone of the city of Lebanon. Land use is primarily small industries with residential development along the south side of the reservoir.

k. Socioeconomics: Small businesses, light industry, manufacturing, and timber-related enterprises are the major employers of the area.

G. Environmental [**19] *Issues and Proposed Resolutions*

There are 3 issues addressed below.

1. Fish and Wildlife Agency Terms and Conditions: The FGD and Interior recommend that the project operate as a run-of-river facility, and that the exemptee install fish passage facilities when they are deemed necessary by the resource agencies.

Operation of the project in a run-of-river mode would minimize reservoir fluctuations and would prevent large fluctuations in flows downstream of the project. Large fluctuations in reservoir elevations or flows downstream of the project would be detrimental to aquatic resources by reducing or altering available habitat. If flows from the project fluctuate widely, benthic organisms, fish eggs, and larvae can be swept downstream (Rochester, H. J., *et al.,* 1984). Operating the project in a run-of-river mode would protect aquatic resources in the project area by maintaining a constant flow regime below the project dam and by preventing the dewatering of fisheries habitat.

Fish passage facilities at the project are not needed currently because anadromous fish are [*63,349] not present in the project area. The success of the ongoing Connecticut River Anadromous [**20] Fish Restoration Plan may, however, require the future construction and maintenance of upstream and/or downstream fish passage facilities. If this restoration program is successful, fish passage would be developed at the project when the FWS, NMFS, or FGD request it.

Interior also includes a requirement for the exemptee to prepare and implement a plan to monitor the flow releases below the project dam. This requirement would enable the resource agencies to determine if the project is in compliance with the terms and conditions of the exemption, and to ensure that the aquatic resources of the area are protected.

2. Archeological and historic sites: The project is located at a dam that has historically provided water for mill operations. Though the area has been previously disturbed by construction, and the

SHPO says the project would not affect any cultural resources, there is the possibility that previously unknown archeological resources could be encountered during project construction.

If the applicant encounters unidentified archeological or historic sites during the development of project works or related facilities, the applicant should stop ground-disturbing and land-clearing [**21] activities in the vicinity of the sites and should consult the New Hampshire SHPO. Before starting any ground-disturbing or land-clearing activities within the project boundaries, other than that specifically authorized in this license, the applicant should consult with the SHPO. In these instances, the applicant should file a plan, including a schedule, for the necessary studies and the SHPO's written comments concerning the plan. Any exemption issued for this project would contain an article for the protection of archeological and historic sites with the above provisions.

3. Public access for recreation: Interior recommends that the exemptee allow public access to the project area for recreational purposes, subject to reasonable safety and liability limitations.

Hoskins states that recreational use of the Mascoma River within the city of Lebanon primarily occurs along the four mile reach of river between the Mascoma Lake dam and the Lebanon Waterworks dam, which is 4.5 miles upstream of the project. This stretch of the river provides opportunities for fishing and canoeing. Hoskins states that access to the project area is limited by surrounding land uses and by topography. [**22]

Public access to rivers is decreasing rapidly as residential and commercial development spreads, especially in urban areas. This decline in recreational river access supply comes at a time when participation in river-oriented activities, including fishing and canoeing, is increasing (President's Commission on Americans Outdoors, 1987). The impacts from the loss of public river access is even more severly felt near population centers. Since people are choosing to recreate closer to home, the demand for recreational access is much greater near populated areas.

Because the project is located in an urban area and access to the Mascoma River in the vicinity of the projects is limited, access to the river for fishing would fill a local recreation need. By providing continued free public access to project lands and waters, the opportunity for participation in river-oriented activities within a short distance of the residents of Lebanon and nearby towns is assured.

Therefore, any exemption issued for this project would contain an article requiring the exemptee to allow free, public recreational access to project lands and waters, within safety limitations.

H. Environmental Impacts [**23]

1. Assessment of impacts expected from the applicant's proposed project (P), with the proposed mitigation and any terms and conditions set by the fish and wildlife agencies; the proposed project with any additional mitigation recommended by the staff (Ps); and any action alternative considered (A). Assessment symbols indicate the following impact levels:

O = None;1 = Minor; 2 = Moderate; 3 Major; A = Adverse; B = Beneficial; L Long-term; S = Short-term. [*63,350]

		Impact		
	Resource	P	Ps	A
a.	Geology-Soils	1AS		
b.	Streamflow	0		
c.	Water quality:			
	Temperature	0		

	Resource	Impact P	Ps	A
	Dissolved oxygen	0		
	Turbidity and sedimentation	1AS		
d.	Fisheries:			
	Anadromous	0		
	Resident	0		
e.	Vegetation	0		
f.	Wildlife	1AS		
g.	Cultural:			
	Archeological	0		
	Historical	0		
h.	Visual quality	0		
i.	Recreation	0		
j.	Land use	0		
k.	Socioeconomics	0		

Remarks: Construction of the project would cause a minor, temporary increase in erosion and sedimentation, and would cause wildlife to temporarily avoid the project area because of increased noise and human activity.

2. Impacts of the no-action alternative.

Under the [**24] no-action alternative, there would be no construction of project facilities or changes to the existing physical, biological, or cultural components of the area. Electrical power that would be generated by the proposed hydroelectric project would have to be generated from other available sources or offset by conservation measures.

3. Recommended alternative (including proposed, required, and recommended mitigative measures):

Proposed project.

4. Reason(s) for selecting the preferred alternative.

The project would redevelop the hydroelectric potential of the site and would produce electrical energy without significantly affecting the existing environmental conditions.

. *Unavoidable Adverse Impacts of the Recommended Alternative*

Construction of the project would cause a minor, temporary increase in erosion and sedimentation, and would cause wildlife to temporarily avoid the project area because of increased noise and human activity.

J. Conclusion

Finding of No Significant Impact. Approval of the recommended alternative [H(3)] would not constitute a major federal action significantly affecting the quality of the human environment; therefore, an environmental [**25] impact statement (EIS) will not be prepared.

K. Literature Cited

Hoskins Diversified Industries, 1987. Application for Exemption from License for the HDI Mascoma Dam, FERC Project No. 9403, New Hampshire. 21 pp. and appendices.

Federal Energy Regulatory Commission. 1986. Environmental assessment for the Connecticut river basin. 30 pp.

Federal Power Commission. 1975. Connecticut River Basin: a framework for environmental impact evaluation. CEM report 4193-533. Prepared for the Federal Power Commission by the Center for Environment and Man, Inc. Washington DC December 1975. 169 pp. and appendices.

Rochester, H., Jr., T. Lloyd, and M. Farr. 1984. Physical impacts of small-scale hydroelectric facilities and their effects on fish and wildlife. U.S. Fish Wildlife Service FWS/OBS -- 84/19. 191 pp.

Stolte, L. 1982. A strategic plan for the restoration of Atlantic salmon to the Connecticut River Basin, revised. U.S. Fish and Wildlife Service, Department of the Interior, Laconia, New Hampshire. September 1982.

L. List of Preparers (Name -- Position title)

James J. Keany -- Ecologist (Coordinator)

Ann Mates -- Recreation Specialist

Mary C. Nowak [**26] -- Writer-Editor [*63,351]

CONNECTICUT RIVER BASIN

Figure 1. Location map of the Connecticut River Basin (Source: Federal Power Commission, 1986).

[See Material in Original] [*63,352]

NEW HAMPSHIRE

Figure 2. Location of the proposed Mascoma Hydroelectric Project, FERC Project No. 9403, New Hampshire (Source: Hoskins Diversified Industries, 1987, as modified by Staff).

[See Material in Original] [*63,353]

Figure 3. Location of project features for the proposed Mascoma Hydroelectric Project, FERC Project No. 9403, New Hampshire (Source: Hoskins Diversified Industries, 1987, as modified by Staff).

[See Material in Original]

Attachment B

River Mill Hydroelectric Project
(MSS795)

RIVER MILL HYDRO / NEW ENGLAND POWER COMPANY
INTERCONNECTION AGREEMENT
dtd October 12, 1989

FILE

New England Power

New England Power Company
25 Research Drive
Westborough, Massachusetts 01582-0010
Tel. (508) 366-9011

October 12, 1989

Mr. William McLaughry
River Mill Hydro
Mechanic Street
Lebanon, NH 03766

Dear Mr. McLaughry

The purpose of this letter is to set forth the terms and conditions of the agreement between River Mill Hydro ("River Mill") and New England Power Company ("NEP") pursuant to which NEP will interconnect with the River Mill 180 KW induction generator at the River Mill secondary 208Y/120 volt bus, and wheel energy to the Littleton Electric Light & Water Department ("Littleton").

The agreement between River Mill and NEP is as follows:

1. Interconnection Terms:
NEP or its affiliate shall construct and own an interconnection with the River Mill 180 KW Induction Generator at the River Mill Hydro Project ("the Project") 208Y/120 volt bus ("Interconnection Point"). Relay and protective devices shall be as shown on Exhibit A.

The interconnection requires the installation of metering, telemetering, and communications equipment. River Mill agrees to pay NEP for all costs and fees associated with the interconnection by NEP and/or its affiliate, including the acquisition of all permits, licenses, franchises or other approvals associated with the installation and operation of the metering, telemetering, communications equipment and any facilities ancillary or appurtenant to them. The estimated interconnection cost including costs to engineer, design, supply and install metering is $6,500.00. River Mill agrees to pay these costs as they become known and prior to their incurrence by NEP or its affiliates.

Within a reasonable period of time following completion of the installation, NEP shall provide River Mill with a report of actual installation costs sufficient to allow identification of all major cost components. Upon completion of the interconnection, River Mill and NEP agree to make a final adjustment to correct for any overpayment or underpayment of the costs of said construction.

River Mill will also be responsible for all costs associated with any future repair and replacement of the NEP metering, telemetering, and telecommunications equipment. NEP will bill River Mill for such costs as they become known.

2. Transmission Service:

NEP's transmission service to River Mill over the interconnection facilities shall be governed by the terms and conditions of NEP's FERC Electric Tariff, Original Volume No. 3, excluding the rates and charges in Schedule II required thereunder, and shall be subject to the existing prior transmission commitments (under both normal and emergency conditions) of NEP or its affiliates to supply electricity to their retail and wholesale power customers (including receipt and delivery of power sold to, or purchased from, other utilities).

NEP shall be obligated to transmit only such energy as is actually received by NEP at the Interconnection Point with River Mill discounted to reflect losses incurred between the metered point and NEP's transmission system.

NEP does not guarantee to transmit a constant supply of electricity under this agreement. It is the intent of all provisions of this agreement that River Mill shall assume the risks of interruption, failure or deficiency in the quality or quantity of service caused by the hazards of the business to the same extent as if River Mill were itself operating NEP's transmission facilities for the purpose of supplying Littleton with electricity. If NEP shall for any reason be unable to make deliveries of electricity hereunder, it shall use its best efforts in accordance with good utility practice to remove the cause of disability and shall resume deliveries as promptly as possible.

3. Delivery and Measurement of Electricity

A. Voltage Level

All electricity shall be delivered to NEP at the Interconnection Point in the form of three-phase sixty-hertz alternating current at a voltage 208Y/120. Momentary voltage fluctuations shall be permitted, provided

that they neither disturb service provided by NEP to its customers nor hinder NEP in maintaining proper voltage conditions.

B. Metering and Related Equipment

NEP or its designee shall, at River Mill's expense, provide, own, and maintain metering, telemetering, and communication equipment. River Mill shall provide suitable space at the Project for installation of the metering, telemetering, and communication equipment at no cost to NEP.

River Mill will be responsible for providing all necessary leased telephone lines and will be responsible for all communication and telemetering equipment required by the New England Power Pool (NEPOOL) or its satellite.

All metering equipment installed pursuant to this Section 3 associated with the Project may be routinely tested by NEP at River Mill's expense, but not more often than annually, in accordance with good utility practice. If, at any time, any metering equipment is found to be inaccurate by plus or minus two percent (2%), NEP shall cause such metering equipment to be made accurate or replaced at River Mill's expense, and meter readings for the period of inaccuracy shall be adjusted so far as the same can be reasonably ascertained, but no adjustment prior to the beginning of the preceding month shall be made except by agreement of the parties. The test shall be made in such manner as may be mutually agreed upon by the parties. Each party shall comply with any reasonable request of the other concerning the sealing of meters, the presence of a representative of the other party when the seals are broken and the tests are made, and other matters affecting the accuracy of the measurement of electricity delivered from the Project. If either party believes that there has been a meter failure or stoppage, it shall immediately notify the other.

4. Plant Operation

A. Power Factor Requirement

Unless otherwise requested by NEP or its designee, River Mill will operate the Project at a unity power factor. If River Mill lacks the capacity to operate the Project at a unity power factor NEP may install, at River Mill's expense, capacitors or other electric equipment necessary to ensure that electricity can be delivered at such power factor.

If the Project is producing electricity for transmission it must supply its own station service

power. Developer agrees to make the necessary arrangements with Granite State Electric Company for backup station service power which shall be provided when the Project is not generating electricity.

B. Miscellaneous Operational and Reporting Obligations

River Mill shall install and maintain all of its equipment and facilities connected to NEP's system in a safe and efficient manner and in accordance with good utility practice and applicable regulations. If at any time, in the reasonable exercise of NEP's judgment, operation of the Project adversely affects the quality of service to NEP's customers, or interferes with the safe and reliable operation of NEP's system, NEP may discontinue transmission of the electricity produced by the Project until the condition has been corrected. In the case of such discontinuance, NEP shall immediately confer with River Mill regarding the conditions causing such discontinuance and its recommendation concerning the timely correction thereof.

5. Access to the Project

Properly accredited representatives of NEP or its affiliates shall at all reasonable times have access to the Project to make reasonable inspections and obtain information required in connection with this agreement.

6. Payments

A. Billing

All payments required by this agreement shall be rendered one month in arrears, and shall be due when rendered. When all or any part of any bill remains unpaid for more than thirty (30) days after the due date, interest at the rate of two percent (2%) over the then current prime interest rate of the First National Bank of Boston shall accrue to NEP from and after the date payment is due on the unpaid amount of the bill or, if the amount of the bill is disputed, the amount finally determined to be due and payable.

River Mill shall remain liable for payments under this agreement without regard to the existence or continuation of its agreement with Littleton or any other utility.

B. Remedies

If any bill remains unpaid for more than sixty (60) days from the payment due date, except amounts in dispute, NEP may suspend delivery of electricity hereunder until full payment has been made of all amounts due.

If either party shall have defaulted in any of its material obligations and such default shall have continued for and not been remedied within ninety (90) days after receipt of a written notice from the other party specifying the nature of such default in reasonable detail, the other party may by written notice terminate this agreement at the end of the next succeeding calendar month. No delay by either party in enforcing any of its rights hereunder shall be deemed a waiver of such rights, nor shall a waiver of one default be deemed a waiver of any other or subsequent default.

The enumeration of the foregoing remedies shall not be deemed a waiver of any other remedies to which either party is legally entitled.

7. Notices and Bills
All payments to NEP shall be sent to:

New England Power Company
25 Research Drive
Westborough, MA 01582
ATTN: Manager of General Accounting

All other notices hereunder shall be sent by U.S. mail, postage prepaid or hand-delivered. Notices and other communications by River Mill to NEP shall be addressed to:

New England Power Service Company
25 Research Drive
Westborough, MA 01582
ATTN: Director of Planning and Power Supply

Notices and other communications by NEP to River Mill shall be addressed to:

River Mill Hydro
Mechanic Street
Lebanon, NH 03766
ATTN: Mr. William McLaughry

Either party may change the address to which bills or notices are to be sent by written notice to the other party.

8. Consequential Damages
In no case shall NEP or its affiliate be liable for incidental, indirect, or consequential damages except those caused by gross negligence or willful misconduct.

If the foregoing reflects your understanding, please sign both copies of this letter and return one copy to me, at the above address. I will return one copy signed by a duly authorized representative of NEP for your file.

Sincerely,

Arthur Demers, Jr.

ACCEPTED:

For River Mill Hydro: _____ 10/23/89 (date)

For New England Power Company _____ 10-13-89 (date)
Vice President

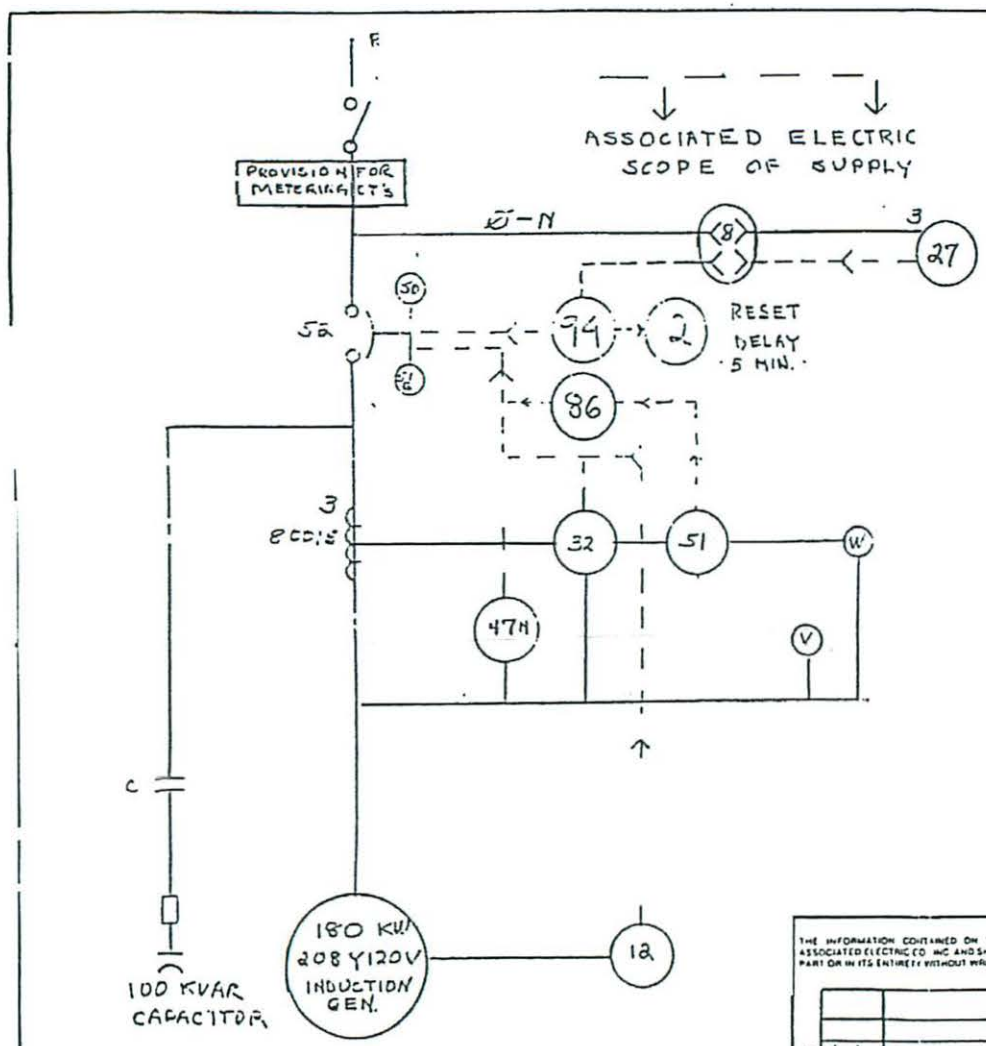

LEGEND

UTILITY PROTECTION DEVICES

8	TEST PLUG	GE PK-2
27	UV RELAY	BASLER BE1-27A3E-C2K-A2N5F
86	LOCKOUT	ELECTROSWITCH 7803-D
94	UNDERVOLTAG AUXILIAY RELAY	GE-HGA-11J56

GENERATOR PROTECTION DEVICES

12	SPEED RELAY	AIRPAX TACH PAK 3
32	REV. PWR. RELAY	BASLER BE4-32-3E1A1
47N	PHASE BAL. RELAY	BASLER BE4-47N-2A2N2
50	INST. O.C. [illegible]	
51G	GROUND FAULT INCLUDED IN 52	
51	TIME OVERCURRENT	BASLER BE4-51-3E1A1

OK J. M. Lenihan 1/31/89

THE INFORMATION CONTAINED ON THIS DRAWING IS THE PROPERTY OF ASSOCIATED ELECTRIC CO INC AND SHALL NOT BE COPIED OR REPRODUCED IN PART OR IN ITS ENTIRETY WITHOUT WRITTEN AUTHORIZATION

REVISIONS		
1/27/89	CHANGED LOCKOUT CIRCUIT	[illegible]
10/19	ADDED EXPANDED & CHANGED NO RELAY NEMENCLATURE & NO	
9/20	ADDED DEVICE NOMENCLATURE	KG
DATE	CHANGE	CHK'D BY

TOLERANCES: FRACTIONS ± .XXX ± .XX ± .XXXX ± ANGLE ±

ASSOCIATED ELECTRIC

CHICOPEE, MA 01020 HILLSBORO, N.H. 03244

DATE 9/19/88	TITLE RIVER MILL HYDRO
SCALE NA	
DRAWN BY RCG	DESCRIPTION PROTECTION PLAN ONE-LINE
APP. BY	
SUPERSEDES	MOD NO / PART NO.
	DWG NO 11220-1