VERIZON NEW ENGLAND INC.

Rates and Charges Effective In

THE STATE OF NEW HAMPSHIRE

NHPUC No. 85

RECEIVED
APR 19 2001
N.H. PUBLIC UTILITIES COMMISSION

Issued: March 07, 2001
Effective: March 07, 2001

J. Michael Hickey
President-NH

1.	**Tariff Information**	1
1.1.	General	1
1.1.1.	Concurring, Connecting and Other Participating Carriers	1
1.1.2.	Page Revisions	1
1.1.2.C.	Supplement Numbers	1
1.1.3.	Tariff Codes	1
1.2.	Referencing	2
1.2.1.	Reference to Other Tariffs	2
1.2.2.	Reference to Other Publications	2
1.3.	Tariff Terminology	3
1.3.1.	Abbreviations	3
1.3.2.	Definitions	5

2.	**General Regulations**	1
2.1.	Application of Tariff	1
2.1.1.	Scope	1
2.2.	Use of Service	2
2.2.1.	General	2
2.2.2.	Lawful Use	2
2.2.3.	Access Service Connections	2
2.2.4.	Title or Ownership Rights	2
2.2.5.	Minimum Periods of Service	2
2.3.	Responsibility of the Telephone Company	3
2.3.1.	Limitations	3
2.3.2.	Liability	3
2.3.3.	Provision of Service	4
2.3.4.	Installation and Point of Termination of Service	5
2.4.	Customer Notification and Coordination	6
2.4.1.	Changes and Substitutions	6
2.4.2.	Refusal and Discontinuance of Service	6
2.4.3.	Service Affecting Activities	7
2.4.4.	Provision and Ownership of Telephone Numbers	7
2.4.5.	Interference or Impairments	8
2.4.6.	Customer Coordination with Respect to Network Contingencies	8
2.5.	Responsibility of The Customer	9
2.5.1.	Scope	9
2.5.2.	Liability	9
2.5.3.	Ownership of Facilities and Theft	10
2.5.4.	Equipment Space and Power	11
2.5.5.	Availability for Testing	11
2.5.6.	Coordination with Respect to Network Contingencies	11
2.5.7.	Balance, Current and Noise	11
2.5.8.	Design of Customer Services	11
2.5.9.	References to the Telephone Company	12
2.5.10.	Jurisdictional Report Requirements	12
2.5.11.	Determination of Intrastate Charges for Mixed Interstate and Intrastate Access Service	15

3.	**Ordering of Service**	1
3.1.	Ordering, Rating and Billing of Access Services Where More Than One Exchange Telephone Company is Involved	1
3.1.1.	General	1
3.1.2.	Meet Point Billing	1
3.1.2.A.	General	1
3.1.2.B.	FGC Availability	1
3.1.2-1	Exhibit-Meet Point Billing	5

4.	**Issuance, Payment and Crediting of Customer Bills**	1
4.1.	Undertaking of the Telephone Company	1
4.1.1.	Billing Convention Methods	1
4.1.2.	Late Payment Penalty	1
4.1.3.	Billing Periods	1
4.1.4.	Payment Date	1
4.1.5.	Medium of Payment	2
4.1.5.A.1.	Immediately Available Funds	2
4.1.6.	Customer Deposits	2
4.1.7.	Nonrecurring Charges	3
4.1.8.	Billing Dispute	4
4.1.9.	Billing Adjustments and Verification	5
4.1.10.	Computation of Billed Charges	6
4.1.11.	Additional Copies of Bills	6
4.1.12.	Meet Point Billing	6
4.2.	Credit Allowance Conditions	7
4.2.1.	Service Interruptions	7

5.	**Carrier Common Line Access Service**	1
5.1.	General	1
5.1.1.	Description	1
5.1.2.	Limitations	1
5.2.	Undertaking of the Telephone Company	2
5.2.1.	Scope	2
5.3.	Obligations of the Customer	3
5.3.1.	Reselling MTS/MTS Type Service	3
5.3.2.	Customer Facilities	3
5.4.	Rate Regulations	4
5.4.1.	Application of Rates and Charges	4
5.4.1.A.	General	4
5.4.2.	Determination of Charges	4
5.4.3.	One Time Credit	5

6.	**Switched Access Service**	1
6.1.	General	1
6.1.1.	Reference to Tariff Provisions	1
6.1.2.	Service Structure	1
6.1.2-1	Exhibit-Local Transport, Local Switching and Carrier Common Line when Combined to Provide a Complete Switched Access Service	2
6.1.3.	Manner of Provision	3
6.2.	Rate Categories	4
6.2.1.	Local Transport	4
6.2.1.E.1.	Entrance Facility	5
6.2.1.E.2.	Interconnection Charge	5
6.2.1.F.	Direct Trunked Transport	5
6.2.1.G.1.	Local Transport Termination	6
6.2.1.G.2.	Local Transport Facility	6
6.2.1.G.3.	Local Transport Tandem Switching	6
6.2.1.J.	Interface Groups	6
6.2.1.K.	Non-Chargeable Optional Features	6
6.2.1.K.1.	Interface Groups 1 and 2	6
6.2.1.K.2.	Interface Group 2	6
6.2.1.K.3.	Interface Groups 6, 7 and 9	7
6.2.1.K.4.	Customer Specified Entry Switch Receive Level	7
6.2.1.K.5.	Customer Specification of Local Transport Termination	7
6.2.1.K.6.	SS7 Signaling	7
6.2.1.L.	Chargeable Optional Features	7
6.2.1.L.1.	CCSA	7
6.2.1-1	Exhibit-Premises Interface Codes–Interface Group 1 (USOC TTP1X)	9
6.2.1-2	Exhibit-Premises Interface Codes–Interface Group 2 (USOC TTP2X)	10
6.2.1-3	Exhibit-Premises Interface Codes–Interface Group 6 (USOC TTP6X)	11
6.2.1-4	Exhibit-Premises Interface Codes–Interface Group 9 (USOC TTP9X)	12
6.2.2.	Local Switching	13
6.2.2.A.1.	Local Access	13
6.2.2.A.1.a.	Common Switching	13
6.2.2.A.1.b.	Transport Termination	13
6.2.2.A.2.	Line Termination	13
6.2.2.A.3.	Intercept	13
6.2.3.	Local Switching Optional Features	13
6.2.3.B.	Alternate Traffic Routing–End Office Alternate Routing When Ordered in Trunks	13
6.2.3.C.	Alternate Traffic Routing–Multiple Customer Premises	14
6.2.3.D.	ANI	14
6.2.3.E.	Band Advance Arrangement for Use With WAL Service	15
6.2.3.F.	Call Denial on Line or Hunt Group	15
6.2.3.G.	Calling Party Number	15
6.2.3.H.	Carrier Identification Parameter	16
6.2.3.I.	Carrier Selection Parameter	16
6.2.3.J.	Charge Number	16

6. Switched Access Service
6.2.3.K. End Office End User Line Service Screening for Use With WAL Service ... 17
6.2.3.L. Hunt Group Arrangement ... 17
6.2.3.M. Hunt Group Arrangement for Use With WAL Service ... 17
6.2.3.N. Nonhunting Number for Use With Hunt Group Arrangement or Uniform Call Distribution Arrangement for Use With WAL Service ... 17
6.2.3.O. Nonhunting Number for Use With Hunt Group or Uniform Call Distribution Arrangement ... 17
6.2.3.P. Operator Trunk Assist Feature ... 18
6.2.3.Q. Operator Trunk Full Feature ... 18
6.2.3.R. Rotary Dial Station Signaling ... 18
6.2.3.S. Routing of IntraLATA Calls to the Telephone Company for Use With WAL Service ... 18
6.2.3.T. Service Class Routing ... 18
6.2.3.U. Service Code Denial on Line or Hunt Group ... 18
6.2.3.V. Uniform Call Distribution Arrangement ... 19
6.2.3.W. Uniform Call Distribution Arrangement for Use With WAL Service ... 19
6.2.3.X. Up to Seven Digit Outpulsing of Access Digits To Customer ... 19
6.2.3.Y. WAL Service Terminations ... 19
6.2.3.Y.1. E&M Supervisory Signaling ... 19
6.2.3.Y.2. Answer Supervision ... 19
6.3. Description of Switched Access Services ... 20
6.3.1. General ... 20
6.3.2. Feature Group 2A (FG2A) ... 20
6.3.2.C. Billing Options ... 20
6.3.2.D. Terminating Access ... 21
6.3.2.E. Originating Access ... 21
6.3.2.F. Signaling ... 21
6.3.2.G. Intercept Announcement ... 21
6.3.3. 800 Data Base Access Service ... 21
6.3.3.A. General ... 21
6.3.3.G. Optional Features ... 23
6.3.3.G.1. Call Handling and Destination Feature ... 23
6.3.3.G.1.f. 800 to POTS Translation ... 23
6.4. Responsibility of the Telephone Company ... 24
6.4.1. General ... 24
6.4.2. Transmission Specifications ... 24
6.4.3. Excessive Trunk Group Blocking ... 24
6.4.4. Measuring Access Minutes ... 24
6.4.4.B. Feature Group 2A Usage Measurement ... 24
6.4.5. Determining Local Transport Facility Mileage ... 25
6.4.6. Determination of Number of Transmission Paths ... 25
6.5. Responsibility of The Customer ... 26
6.5.1. General ... 26
6.5.2. Facility Requirements ... 26
6.5.3. Report Requirements ... 26
6.5.3.A.1. Jurisdictional Reports ... 26
6.5.3.A.2. Usage Data–Meet Point Billing ... 26
6.5.3.A.3. Code Screening Reports ... 26

6. Switched Access Service
6.5.3.A.4. Trunk Group Measurement Reports 26
6.5.4. Supervisory Signaling 26
6.5.5. Design of Switched Access Services 26
6.6. Rate Regulations 27
6.6.1. General 27
6.6.2. Monthly Rates 27
6.6.3. Usage Rates 27
6.6.4. Nonrecurring Charges 27
6.6.4.B. Installation of Service 27
6.6.4.B.1. Switched Access Service Ordered on a Per Line or Trunk Basis 27
6.6.4.B.2. Switched Access Service Ordered on a BHMC Basis 27
6.6.4.B.3. CCSA STP Links 27
6.6.4.C. Installation of Optional Features or BSEs 28
6.6.4.D. Service Rearrangements 28
6.6.4.E. Trunk Rearrangements and Rearrangements of Switched Access Services onto an Existing Switched Access DS3 or DS1 Facility 29
6.6.4.E.1. Trunk Rearrangements 29
6.6.4.F. All Other Service Rearrangements 29
6.6.4.G. Moves 31
6.6.4.G.2.a. Moves Within the Same Building 31
6.6.4.G.2.b. Moves to a Different Building 31
6.6.4.H. Upgrades 31
6.7. Application of Rates and Charges 32
6.7.1. General 32
6.7.2. CCSA Rates 32
6.7.3. 800 Database Access Service Carrier Identification Charge 32
6.7.4. Local Transport Rates 32

7. Reserved for Future Use 1

8. Reserved for Future Use 1

9. Reserved for Future Use 1

10. Reserved for Future Use 1

11. Special Facilities Routing of Access Services 1
11.1. General 1
11.1.1. Description 1
11.1.1.A.1. Diversity 1
11.1.1.A.2. Avoidance 1
11.1.1.A.3. Cable Only Facilities 1
11.1.2. Manner of Provision 1
11.1.3. Application of Rates and Charges 1

12. Reserved for Future Use 1

13. Additional Engineering, Labor and Miscellaneous Services 1
13.1. Regulations 1
13.1.1. General 1

14. IntraLATA Presubscription (ILP) Services 1
14.1. IntraLATA Presubscription 1
14.1.1. Description 1
14.2. Primary Interexchange Carrier (PIC) Verification 2
14.2.1. Description 2
14.3. Application of Rates and Charges 3
14.3.1. IntraLATA Presubscription 3
14.3.1.B. Service Charges 3
14.3.1.C. Unauthorized ILP PIC Change/Restoral 3
14.3.2. PIC Verification Service 4
14.3.3. Intrastate Equal Access Cost Recovery 4
14.3.4. ILP PIC Change Charge Billing Options 4
14.3.4.A. Direct Billing Option 4
14.3.4.B. Reverse Billing Option 4

15. Operating Territory 1
15.1. Locations 1
15.1.1. Rate Centers 1

16. Reserved for Future Use 1

17. Reserved for Future Use 1

18. Reserved for Future Use 1

19. Reserved for Future Use 1

20. Reserved for Future Use 1

21. Reserved for Future Use 1

22. Reserved for Future Use 1

23. Reserved for Future Use 1

24. Reserved for Future Use 1

25. Reserved for Future Use 1

26. Reserved for Future Use 1

27. Reserved for Future Use 1

28. Reserved for Future Use 1

29. Reserved for Future Use 1

30.	**Rates and Charges**	1
30.1.	Tariff Information	1
30.2.	General Regulations	2
30.3.	Ordering of Service	3
30.4.	Issuance, Payment and Crediting of Customer Bills	4
30.5.	Carrier Common Line Access Service	5
30.5.1.	Carrier Common Line	5
30.6.	Switched Access	6
30.6.1.	Entrance Facility	6
30.6.2.	Direct Trunked Transport	7
30.6.3.	Tandem Switched Transport–Local Transport Termination	7
30.6.4.	Tandem Switched Transport–Local Transport Facility	7
30.6.5.	Tandem Switched Transport–Tandem Switching	8
30.6.6.	Interconnection Charge	8
30.6.7.	Local Transport–Other	8
30.6.8.	Local Switching	9
30.6.9.	Feature Group 2A	9
30.6.10.	800 Database Access Service	10
30.6.11.	Shared Billing Arrangement	10
30.7.	Reserved for Future Use	11
30.8.	Reserved for Future Use	12
30.9.	Reserved for Future Use	13
30.10.	Reserved for Future Use	14
30.11.	Special Facilities Routing of Access Services	15
30.12.	Reserved for Future Use	16
30.13.	Additional Engineering, Labor and Miscellaneous Services	17
30.14.	IntraLATA Presubscription (ILP) Services	18
30.14.1.	IntraLATA Presubscription (ILP)	18
30.14.2.	PIC Verification Service	18
30.14.3.	Intrastate Equal Access Cost Recovery	18
30.15.	Operating Territory	19
30.16.	Reserved for Future Use	20
30.17.	Reserved for Future Use	21
30.18.	Reserved for Future Use	22
30.19.	Reserved for Future Use	23
30.20.	Reserved for Future Use	24
30.21.	Reserved for Future Use	25
30.22.	Reserved for Future Use	26
30.23.	Reserved for Future Use	27
30.24.	Reserved for Future Use	28
30.25.	Reserved for Future Use	29
30.26.	Reserved for Future Use	30
30.27.	Reserved for Future Use	31
30.28.	Reserved for Future Use	32
30.29.	Reserved for Future Use	33

31. Rates and Charges–Individual Case Basis (ICB) Customer Specific Charges 1

1. Tariff Information
1.1 General

1.1.1	Concurring, Connecting and Other Participating Carriers
A.	There are no concurring, connecting or other participating carriers.

1.1.2	Page Revisions
A.	As a result of regulatory initiatives tariff pages are revised and filed with the PUC on a continual basis. When tariff pages are filed, they show an issued and effective date (see page bottom). The issued date is the day upon which the pages were filed. The effective date is thirty days following the issued date, or the date upon which the pages have been ordered to become effective.
B.	Each tariff page displays unique page identification information (see page top right). The first issuance of a page is labeled as the original. Future revisions are issued sequentially as follows, first revision, second revision, third revision, (etc.). Revised pages cancel effective pages. The effective page is the foundation upon which all revisions are made.
C.	**Supplement Numbers**—Tariff pages are occasionally issued as supplements. This occurs when the page being filed is already pending PUC decision in another regulatory initiative. When the pending page becomes effective and the supplement page becomes effective as well, it becomes necessary to incorporate the revisions contained on the supplement page into a standard number tariff page. The incorporation will generally occur in the next regulatory initiative in which that page is involved.

1.1.3	Tariff Codes
A.	Appearing in the right margins of tariff pages are alphabetical characters enclosed in parenthesis. These characters represent a coding mechanism to explain the modification that has been made from one page revision to the next. They are as follows.
1.	(C)—A change in regulation
2.	(D)—A deletion due to discontinuance of a rate or regulation
3.	(I)—A rate that has been increased
4.	(N)—A new regulation or rate
5.	(R)—A rate that has been decreased
6.	(S)—The incorporation of approved material issued under a supplement
7.	(T)—Text that has changed without causing a change in rate or regulation
8.	(X)—Text that has been moved from one page to another

1. Tariff Information
1.2 Referencing

1.2.1	Reference to Other Tariffs
A.	Whenever reference is made in this tariff to other tariffs of the Telephone Company, the reference is to the tariffs in force as of the effective date of this tariff, and to amendments thereto and successive issues thereof. The regulations, rates and charges contained herein are in addition to the applicable regulations, rates and charges specified in other tariffs of the Telephone Company which are referenced herein.

1.2.2	Reference to Other Publications
A.	Reference to publications (technical or otherwise), may be made in this tariff. Such publications may be obtained from the sources specified in Bell Atlantic Telephone Companies Tariff FCC No. 11.

1. Tariff Information
1.3 Tariff Terminology

1.3.1 Abbreviations	
ac	Alternating Current
ANI	Automatic Number Identification
ANSI	American National Standards Institute
BHMC	Busy Hour Minutes of Capacity
BP	Billing Percentage
CCS7	Common Channel Signaling 7
CCSA	Common Channel Signaling Access
CIP	Carrier Identification Parameter
CN	Charge Number
CO	Central Office
CPN	Calling Party Number
CSP	Carrier Selection Parameter
dB	Decibel
dc	Direct Current
ELEPL	Equal Level Echo Path Loss
EPL	Echo Path Loss
f	Frequency
FID	Field Identifier
FCC	Federal Communications Commission
Hz	Hertz
IC	Interexchange Carrier
ICB	Individual Case Basis

1. Tariff Information
1.3 Tariff Terminology

1.3.1 Abbreviations	
IP	Interconnection Point
LATA	Local Access and Transport Area
MTS	Message Telecommunications Service(s)
NPA	Numbering Plan Area
NRC	Nonrecurring Charge
NXX	Three Digit Central Office Code
POT	Point of Termination
POTS	Plain Old Telephone Service
RSM	Remote Switching Module
RSS	Remote Switching System
SMS	Service Management System
SP	Signaling Point
SPOI	Signaling Point of Interconnection
SS7	Signaling System 7
SSP	Service Switching Point
STP	Signaling Transfer Point
TCIC	Trunk Circuit Identification Code
TSPS	Traffic Service Position System
USOC	Uniform Service Order Code
V&H	Vertical & Horizontal
WAL	WATS Access Line
WATS	Wide Area Telecommunications Service(s)

1. Tariff Information
1.3 Tariff Terminology

1.3.1 Abbreviations	
WSO	WATS Serving Office

1.3.2 Definitions
800 Database Access Query—A database lookup which returns a valid identification code.
800 Service Management System—The main operations support system used to create and update 800 service records in the national 800 database.
800 Service Provider—A telecommunications company, including exchange carriers and ICs or resellers of exchange or interexchange services, that offers 800 service to end users.
Access Code—A uniform five or seven digit code assigned by the Telephone Company to an individual customer. The five digit code has the form 10XXX and the seven digit code has the form 950-XXXX.
Access Minutes—That usage of exchange facilities in intrastate service for the purpose of calculating chargeable usage. On the originating end of an intrastate call, usage is measured from the time the originating end user's call is delivered by the Telephone Company to and acknowledged as received by the customer's facilities connected with the originating exchange. On the terminating end of an intrastate call, usage is measured from the time the call is received by the end user in the terminating exchange. Timing of usage at both originating and terminating ends of an intrastate call shall terminate when the calling or called party disconnects, whichever event is recognized first in the originating and terminating exchanges, as applicable.
Access Tandem—A Telephone Company switching system that provides a concentration and distribution function for originating or terminating traffic between end offices and a customer's premises.
Answer/Disconnect Supervision—The transmission of the switch trunk equipment supervisory signal (Off Hook or On Hook) to the customer's point of termination as an indication that the called party has answered or disconnected.
Attenuation Distortion—The difference in loss at specified frequencies relative to the loss at 1004 Hz, unless otherwise specified.
Bit—The smallest unit of information in the binary system of notation.
Business Day—The time of day that a company is open for business. Generally, in the business community, these are 8AM or 9AM to 5PM or 6PM, respectively, with an hour for lunch, Monday through Friday, resulting in a standard forty hour work week. However, business day hours for the Telephone Company may vary based on Telephone Company policy, union contract and location. To determine such hours for an individual company, or company location, that company should be contacted.

1. Tariff Information
1.3 Tariff Terminology

1.3.2 Definitions
Busy Hour Minutes of Capacity—The customer specified maximum amount of switched access service access minutes the customer expects to be handled in an end office switch during any hour in an 8AM to 11PM period for the feature group ordered. This customer furnished BHMC quantity is the input data the Telephone Company uses to determine the number of transmission paths for the feature group ordered.
Call—A customer attempt for which the complete address code (e.g., 0–, 911, or ten digits) is provided to the serving dial tone office.
Carrier or Common Carrier—See Interexchange Carrier.
CCS—A hundred call seconds, which is a standard unit of traffic load that is equal to one-hundred seconds of usage or capacity of a group of servers (e.g., Trunks).
Central Office—A local Telephone Company switching system where telephone exchange service customer station loops are terminated for purposes of interconnection to each other and to trunks.
Central Office Prefix—The first three digits (NXX) of the seven digit telephone number assigned to a customer's telephone exchange service when dialed on a local basis.
Channel(s)—An electrical (or photonic, in the case of fiberoptic based transmission systems), communications path between two or more points of termination.
Channelize—The process of multiplexing-demultiplexing wider bandwidth or higher speed channels into narrower bandwidth or lower speed channels.
Common Channel Signaling Access—The capability which allows customer access to the Telephone Company SS7 signaling network.
Common Line—A line, trunk or other facility provided under the general and/or local exchange service tariffs of the Telephone Company, terminated on a central office switch. A common line residence is a line or trunk provided under the residence regulations of the general and/or local exchange service tariffs. A common line business is a line provided under the business regulations of the general and/or local exchange service tariffs.
Common Transport—The use of circuits and equipment for transport by multiple customers.
Communications System—Channels and other facilities which are capable of communications between terminal equipment provided by other than the Telephone Company.
Conversation Minutes—The measurement of minutes beginning when either answer supervision or an off hook supervisory signal is received from the terminating end user's end office and ending when either disconnect supervision or an on hook supervisory signal is received from the terminating end user's end office, indicating the called party has disconnected.

1. Tariff Information
1.3 Tariff Terminology

1.3.2 Definitions
Customer(s)—Any individual, partnership, association, joint stock company, trust, corporation or governmental entity or other entity which subscribes to the services offered under this tariff, including ICs, resellers or other entities engaged in the provisioning of interexchange services which utilize the network of the Telephone Company and who have been certified to provide interexchange services by the PUC as described in Section 2.1.
Decibel—A unit used to express relative difference in power, usually between acoustic or electric signals, equal to ten times the common logarithm of the ratio of two signal powers.
Decibel Reference Noise C Message Weighting—Noise power measurements with C Message Weighting in dBs relative to a reference 1000 Hz tone of 90 dB below one milliwatt.
Decibel Reference Noise C Message Referenced to 0—Noise power in Decibel Reference Noise C Message Weighting referred to or measured at a zero transmission level point.
Dedicated Transport—The use of circuits and equipment for transport by a single customer.
Detail Billing—The listing of each message and/or rate element for which charges to a customer are due on a bill prepared by the Telephone Company.
Direct Trunked Transport—Transport of switched access service, over facilities dedicated to the use of a single customer, without switching at the tandem, either between the serving wire center and the end office, or between two customer designated Telephone Company offices.
Directory Assistance—The provision of telephone numbers by a Telephone Company operator when the operator location is accessed by a customer by dialing (NPA) 555-1212.
Echo Path Loss—The measure of reflected signal at a four wire point of termination without regard to the send and receive transmission level point.
Echo Return Loss—A frequency weighted measure of return loss over the middle of the voiceband (approximately 500 to 2500 Hz), where talker echo is most annoying.
Effective 2 Wire—A condition which permits the simultaneous transmission in both directions over a channel, but it is not possible to insure independent information transmission in both directions. Effective two wire channels may be terminated with two wire or four wire interfaces.
Effective 4 Wire—A condition which permits the simultaneous independent transmission of information in both directions over a channel. The method of implementing effective four wire transmission is at the discretion of the Telephone Company (physical, time domain, frequency domain separation or echo cancellation techniques). Effective four wire channels may be terminated with a two wire interface at the customer's premises. However, when terminated two wire, simultaneous independent transmission cannot be supported because the two wire interface combines the transmission paths into a single path.

1. Tariff Information
1.3 Tariff Terminology

1.3.2 Definitions
End Office Switch—A local Telephone Company switching system where telephone exchange service customer station loops are terminated for purposes of interconnection to trunks. Included are remote switching modules and remote switching systems served by a host office in a different wire center.
End User—Any customer of an intrastate telecommunications service that is not a carrier, except that a carrier other than a telephone company shall be deemed to be an end user when such carrier uses a telecommunications service for administrative purposes.
Entrance Facility—Transport from the customer designated premises to the serving wire center of the customer premises or to an alternate wire center negotiated with the Telephone Company.
Entry Switch—See First Point of Switching.
Equal Level Echo Path Loss—The measure of Echo Path Loss (EPL) at a 4 wire interface which is corrected by the difference between the send and receive Transmission Level Point (TLP). ELEPL = EPL – TLP (send) + TLP (receive).
Exchange—A unit generally smaller than a local access and transport area, established by the Telephone Company for the administration of communications service in a specified area which usually embraces a city, town or village and its environs. It consists of one or more central offices together with the associated facilities used in furnishing communications service within that area. One or more designated exchanges comprise a given local access and transport area.
Exit Message—A Signaling System 7 message sent to an end office by the Telephone Company's tandem switch to mark the carrier connect time when the Telephone Company's tandem switch sends an initial address message to an IC.
Expected Measured Loss—A calculated loss which specifies the end to end 1004 Hz loss on a terminated test connection between two readily accessible manual or remote test points. It is the sum of the inserted connection loss and test access loss including any test pads.
Field Identifier—Two to four characters that are used on service orders to convey specific instructions. Field identifiers may or may not have associated data. Selected field identifiers are used in Telephone Company billing systems to generate NRCs.
First Come First Served—A procedure followed when a shortage of facilities or equipment occurs, such that an access service ordered cannot be installed. The orders delayed by the shortage of facilities will be prioritized according to the sequence in which they were received. That is, when facilities or equipment become available, the first order received will be the first order processed.
First Point of Switching—The first Telephone Company location at which switching occurs on the terminating path of a call proceeding from the customer's premises to the terminating end office and, at the same time, the last Telephone Company location at which switching occurs on the originating path of a call proceeding from the originating end office to the customer's premises.

1. Tariff Information
1.3 Tariff Terminology

1.3.2 Definitions
Frequency Shift—The change in the frequency of a tone as it is transmitted over a channel.
Grandfathered—Terminal equipment, multiline terminating systems and protective circuitry directly connected to the facilities utilized to provide services under the provisions of this tariff, and which are considered grandfathered under Part 68 of the FCCs rules and regulations.
Host Office—An electronic switching system which provides call processing capabilities for one or more remote switching modules or remote switching systems.
Immediately Available Funds—A corporate or personal check drawn on a bank account and funds which are available for use by the receiving party on the same day on which they are received and include US Federal Reserve bank wire transfers, US Federal Reserve notes (paper cash), US coins and US Postal Money Orders.
Impedance Balance—The method of expressing echo return loss and singing return loss at a four wire interface whereby the gains and/or loss of the four wire portion of the transmission path, including the hybrid, are not included in the specification.
Individual Case Basis—A condition in which the regulations (if applicable), rates and charges for an offering under the provisions of this tariff are developed based on the circumstances in each case.
Initial Address Message—A Signaling System 7 message sent in the forward direction to initiate trunk set up with the busying of an outgoing trunk which carries the information about that trunk along with other information relating to the routing and handling of the call to the next switch.
Inserted Connection Loss—The 1004 Hz power difference (in dB) between the maximum power available at the originating end and the actual power reaching the terminating end through the inserted connection.
Interexchange Carrier or Interexchange Common Carrier—Any individual, partnership, association, joint stock company, trust, governmental entity or corporation, other than the Telephone Company, authorized by the PUC and engaged for hire in intrastate communications by wire or radio, between two or more exchanges.
Intermediate Hub—A wire center that provides multiplexing which can serve itself and one or more wire centers within the LATA. In an intermediate hub (wire center), a DS3 or DS1 facility can be multiplexed and the individual switched access channels terminated at customer designated end office or access tandem switch(es) within the local serving area of that wire center. The individual special access channels are terminated at customer designated premises located within the local serving area of that wire center. Individual special access channels can be extended through any designated wire center(s) subtending the intermediate hub within the LATA to terminate at customer designated premises located within the local serving area of each wire center.
Interstate Communications—Both interstate and foreign communications.

1. Tariff Information
1.3 Tariff Terminology

1.3.2 Definitions
Intrastate Communications—Any communications within a state subject to oversight by a state regulatory commission as provided by the laws of the state involved.
Legal Holiday—Days other than Saturday or Sunday on which the Telephone Company is normally closed. These include New Year's Day, Independence Day, Labor Day, Veteran's Day, Thanksgiving Day, Christmas Day and a day when Washington's Birthday, Memorial Day or Columbus Day is legally observed and other locally observed holidays when the Telephone Company is closed.
Lineside Connection—A connection of a transmission path to the line side of a local exchange switching system.
Local Access and Transport Area—A geographic area established for the provision and administration of communications service. It encompasses one or more designated exchanges, which are grouped to serve common social, economic and other purposes.
Local Calling Area—A geographical area as defined in NHPUC No. 83 in which an end user (telephone exchange service subscriber) may complete a call without incurring MTS charges.
Local Tandem Switch—A local Telephone Company switching unit by which local or access telephonic communications are switched to and from an end office switch.
Loss Deviation—The variation of the actual loss from the designed value.
Major Fraction Thereof—Any period of time in excess of one half of the stated amount of time. As an example, in considering a period of 24 hours, a major fraction thereof would be any period of time in excess of 12 hours exactly. Therefore, if a given service is interrupted for a period of 36 hours and 15 minutes, the customer would be given a credit allowance for two 24 hour periods for a total of 48 hours.
Message—A Call.
Network Control Signaling—The transmission of signals used in the telecommunications system which performs functions such as supervision (control, status and charge signals), address signaling (e.g., dialing), calling and called number identifications, rate of flow, service selection error control and audible tone signals (call progress signals indicating reorder or busy conditions, alerting, coin denominations, coin collect and coin return tones) to control the operation of the telecommunications system.
North American Numbering Plan—A three digit area (numbering plan area) code and a seven digit telephone number made up of a three digit central office code plus a four digit station number.
Off Hook—The active condition of switched access or a telephone exchange service line.
On Hook—The idle condition of switched access or a telephone exchange service line.

1. Tariff Information
1.3 Tariff Terminology

1.3.2 Definitions
Operator Services Provider—The interstate provider of operator services to which an end user placing an operator assisted call is connected when the end user's presubscribed IC designates a provider of operator services to handle its operator traffic.
Originating Direction—The use of switched access service for the origination of calls from an end user premises to an IC premises.
Payphone Service Provider—An end user who subscribes to public telephone service under the Telephone Company's general and/or local exchange service tariffs.
Point Code—A unique nine digit numeric identifier that identifies a customer's SS7 capable switch and other SS7 network elements or nodes.
Point of Termination—The demarcation point or network interface, at which the Telephone Company's responsibility for the provision of access service ends (refer to Section 2.3.4). The point of demarcation or network interface is the point of interconnection between Telephone Company communications facilities and customer provided facilities as defined in Section 68.3 of the FCCs rules and regulations.
Premises—A building, or a portion of a building in a multitenant building, or buildings on continuous property (except railroad right of way, etc.).
Public Telephone Service—A Public Access Smart-Pay Line or Public Access Line which is provided under the Telephone Company's general and/or local exchange service tariff.
Remote Node—A Telephone Company building in which remote switching modules and/or remote switching systems are located.
Remote Switching Modules and/or Remote Switching Systems—Small, remotely controlled electronic end office switches which obtain their call processing capability from an ESS type host office and cannot accommodate direct trunks to a customer.
Return Loss—A measure of the similarity between the two impedances at the junction of two transmission paths. The higher the return loss, the higher the similarity.
Service Access Code—A three digit code that takes the place of an NPA in the dialing sequence. Particular services provided by an IC, BOC or independent telephone company, may include but are not limited to 700 (IC Services), 800 (800 Access Service) and 900 (National dial-it network communications service). Service access codes are associated with switched access services that may be ordered by an IC as part of the access services tariff. A Telephone Company may screen calls and route to an IC specified point of presence based upon the SAC dialed.
Service Control Point—The SS7 node where Telephone Company databases reside.
Signaling Point—A switch that is capable of supporting SS7 Signaling.
Signaling Point of Interconnection—The customer designated location, in the same LATA as the Telephone Company STP, where Signaling System 7 signaling information is exchanged between the Telephone Company and the customer.

1. Tariff Information
1.3 Tariff Terminology

1.3.2 Definitions
Signaling System 7 Network—A digital data network carrying signaling information which interfaces with the Telephone Company voice/data network for services using the ANSI CCS7 signaling protocol.
Signaling Transfer Point—A signaling point which routes and/or transfers signaling messages through the common channel signaling network.
Singing Return Loss—The frequency weighted measure of return loss at the edges of the voiceband (200 to 500 Hz and 2500 to 3200 Hz), where singing (instability) problems are most likely to occur.
Subtending End Office of an Access Tandem—An end office that has final trunk group routing through that tandem.
Super-Intermediate Hub—A wire center that serves itself and/or subtending wire centers in an entire LATA or within one or more specific NPA(s) in a LATA for the provision of multiplexing (DS3 to DS1 or DS1 to Voice). In this super-intermediate hub (wire center) a DS3 or DS1 facility can be multiplexed and the individual channels terminated at customer designated end office or access tandem switches, or at customer designated premises located within the local serving area of this super-intermediate hub. The individual channels can be extended through its subtending wire center(s) to terminate at customer designated premises located within the local serving area of each subtending wire center.
Switching Point Code—A unique nine character, numeric code that identifies a switch that is supported by SS7 Signaling. (See Point Code)
Switching Systems—The hardware and/or software utilized by the Telephone Company for the establishment and maintenance of a given central office.
Tandem Switched Transport—Transport of switched access service to an end office that includes switching at the tandem.
Telephone Company—Verizon New England Inc. unless otherwise stated. Verizon New England Inc. also does business under the name Verizon New Hampshire. Advertising and billing of customers are done under the name Verizon New England Inc.
Terminating Direction—The use of switched access service for the completion of calls from a customer premises to an end user premises.
Terminus Hub—A wire center in which a DS3 or DS1 facility can be mulitplexed into individual channels. A terminus hub serves only customers in the wire center in which the multiplexing is performed.
Traffic Type—Three major types of traffic identified as originating, terminating and directory assistance. Originating traffic type represents access capacity within a LATA for carrying traffic from the end user to the customer. Terminating traffic type represents access capacity within a LATA for carrying traffic from the customer to the end user. Directory assistance traffic type represents access capacity within a LATA for carrying directory assistance traffic from the customer to a directory assistance location.

1. Tariff Information
1.3 Tariff Terminology

1.3.2 Definitions
Transmission Path—An electrical path capable of transmitting signals within the range of the service offering, (e.g., a voice grade transmission path is capable of transmitting voice frequencies within the approximate range of 300 to 3000 Hz). A transmission path is comprised of physical or derived channels consisting of any form or configuration of facilities plant typically used in the telecommunications industry.
Trunk—A transmission path connecting two switching systems in a network, used in the establishment of an end to end connection.
Trunk Circuit Identification Code—The number assigned to each switched trunk to identify it to the SS7 signaling system.
Trunk Group—A set of trunks which are traffic engineered as a unit for the establishment of connections between switching systems in which all of the communications paths are interchangeable.
Trunkside Connection—The connection of a transmission path to the trunk side of a local exchange switching system.
Two Wire to Four Wire Conversion—An arrangement which converts a four wire transmission path to a two wire transmission path to allow a four wire facility to terminate in a two wire entity (e.g., a central office switch).
Uniform Service Order Code—A three or five character alphabetic, numeric or an alphanumeric code that identifies a specific item of service or equipment. USOCs are used in the Telephone Company billing system to generate recurring rates and NRCs.
V and H Coordinates Method—A method of computing airline miles between two points by utilizing an established formula which is based on the vertical and horizontal coordinates of the two points.
WATS Serving Office—A Telephone Company designated serving wire center where switching, screening and/or recording functions are performed in connection with the closed end of WATS or WATS type services.
Wire Center—A building in which one or more central offices, used for the provision of telephone exchange services are located.
Wireless Carriers—Carriers which are regulated under Parts 22 and 90 of the FCCs rules and regulations.

2. General Regulations
2.1 Application of Tariff

2.1.1	Scope
A.	This tariff contains regulations, rates and charges applicable to switched access services and other miscellaneous services, hereinafter referred to collectively as service(s), provided by Verizon New England Inc., hereinafter referred to as the Telephone Company, to interexchange carriers and wireless carriers, including resellers or other entities engaged in the provision of public utility common carrier services which utilize the network of the Telephone Company, who are certified to provide such services by the PUC.
B.	For purposes of administering this tariff, such interexchange carriers and wireless carriers, including resellers or other entities engaged in the provision of public utility common carrier services which utilize the network of the Telephone Company, who are certified to provide such services by the PUC, are hereinafter referred to as customers.

2. General Regulations
2.2 Use of Service

2.2.1	General
A.	A customer, authorized by the PUC, offering public utilities common carrier services will receive service under NHPUC No. 85, as set forth in Section 2.1.

2.2.2	Lawful Use
A.	The service provided under this tariff shall not be used for an unlawful purpose.

2.2.3	Access Service Connections
A.	Equipment and systems (i.e., terminal equipment, multiline terminating systems and communications systems) may be connected with switched access service furnished by the Telephone Company where such connection is made in accordance with the provisions stated in Section 2 and in technical reference PUB AS No. 1.

2.2.4	Title or Ownership Rights
A.	The payment of rates and charges by customers for the services offered under the provisions of this tariff does not assign, confer or transfer title or ownership rights to proposals or facilities developed or utilized respectively, by the Telephone Company in the provision of such services.

2.2.5	Minimum Periods of Service
A.	The minimum periods for which services and monthly rated optional features are provided and for which rates and charges are applicable is one month.
B.	When a service is discontinued prior to the expiration of the minimum period, charges are applicable, whether the service is used or not. The applicable charge will be the total monthly charges, at the rate level in effect at the time service is discontinued, for the remainder of the minimum period plus all applicable NRCs.

2. General Regulations
2.3 Responsibility of the Telephone Company

2.3.1	Limitations
A.	The Telephone Company does not undertake to transmit messages under this tariff.
B.	The Telephone Company will, for maintenance purposes, test its services only to the extent necessary to detect and/or clear troubles.
C.	The Telephone Company does not warrant that its facilities and services meet standards other than those set forth in this tariff.
D.	The provision of such services by the Telephone Company as set forth in this tariff does not constitute a joint undertaking with the customer for the furnishing of any service.

2.3.2	Liability
A.	The Telephone Company's liability, if any, for its willful misconduct is not limited by this tariff.
B.	With respect to any other claim or suit, by a customer or by any others, for damages associated with the installation, provision, termination, maintenance, repair or restoration of service, and subject to the provisions contained in Section 2.3.2C, through 2.3.2G, the Telephone Company's liability, if any, shall not exceed an amount equal to the proportionate charge for the service for the period during which the service was affected. This liability for damages shall be in addition to any amounts that may otherwise be due the customer under this tariff as a credit allowance for a service interruption.
C.	The Telephone Company shall not be liable for any act or omission of any other carrier or customer providing a portion of a service, nor shall the Telephone Company for its own act or omission hold liable any other carrier or customer providing a portion of a service.
D.	The Telephone Company is not liable for damages to the customer's premises resulting from the furnishing of a service, including the installation and removal of equipment and associated wiring, unless the damage is caused by the Telephone Company's negligence.
E.	The Telephone Company shall be indemnified, defended and held harmless by the end user or customer against any claim, loss or damage arising from the end user's use or the customer's use of services offered under this tariff, involving:
1.	Claims for libel, slander, invasion of privacy, or infringement of copyright arising from the end user's or customer's own communications;
2.	Claims for patent infringement arising from the end user's or customer's acts combining or using the service furnished by the Telephone Company in connection with facilities or equipment furnished by the end user or customer; or
3.	All other claims arising out of any act or omission of the end user or customer in the course of using services provided pursuant to this tariff.

2. General Regulations
2.3 Responsibility of the Telephone Company

2.3.2	Liability
F.	The Telephone Company does not guarantee or make any warranty with respect to its services when used in an explosive atmosphere. The Telephone Company shall be indemnified, defended and held harmless by the customer from any and all claims by any person relating to the customer's use of services so provided.
G.	No license under patents (other than the limited license to use) is granted by the Telephone Company or shall be implied or arise by estoppel, with respect to any service offered under this tariff. The Telephone Company will defend the customer against claims of patent infringement arising solely from the use by the customer of services offered under this tariff and will indemnify such customer for any damages awarded based solely on such claims.
H.	The Telephone Company's failure to provide or maintain services under this tariff shall be excused by governmental orders, civil commotions, criminal actions taken against the Telephone Company, acts of God and other circumstances beyond the Telephone Company's reasonable control, subject to the credit allowance for a service interruption as set forth in Section 4.2.
I.	The Telephone Company shall be responsible only for the installation, operation and maintenance of the services it provides.

2.3.3	Provision of Service
A.	The use, installation and restoration of services shall be in accordance with Part 64.401, Appendix A, of the FCCs rules and regulations, which specifies the priority system for such activities. Subject to compliance with those rules, where a shortage of facilities or equipment exists at any time, either for temporary or protracted periods, the services offered herein will be provided to customers on a first come, first served basis.
B.	The services offered under the provisions of this tariff are subject to availability. The Telephone Company, to the extent that such services are or can be made available with reasonable effort, and after provision has been made for the Telephone Company's telephone exchange services, will provide to the customer upon reasonable notice services offered in other applicable sections of this tariff at rates and charges specified therein.
C.	Services are provided 24 hours daily, seven days per week, except as set forth in other applicable sections of this tariff.

2. General Regulations
2.3 Responsibility of the Telephone Company

2.3.4	Installation and Point of Termination of Service
A.	The access services provided under this tariff include Telephone Company communication facilities up to the POT (as defined in Section 1.6), which denotes the demarcation point, and will be installed by the Telephone Company to such POT. If the POT is moved subsequent to the original installation, the charges described in Section 6.6.1 for switched access services apply as appropriate. Any additional terminations at the customer's premises beyond such POT are the sole responsibility of the customer.

2. General Regulations
2.4 Customer Notification and Coordination

2.4.1	Changes and Substitutions
A.	Except as provided for equipment and systems subject to FCC Part 68 Regulations at 47 C.F.R. Section 68.110(b), the Telephone Company may, where such action is reasonably required in the operation of its business substitute, or change or rearrange certain facilities, equipment, criteria, characteristics, operations or procedures as follows.
1.	Substitute, change or rearrange any facilities used in providing service under this tariff, including but not limited to:
a.	Substitution of different metallic facilities
b.	Substitution of carrier or derived facilities for metallic facilities used to provide other than metallic facilities, and
c.	Substitution of metallic facilities for carrier or derived facilities used to provide other than metallic facilities;
2.	Change minimum protection criteria,
3.	Change operating or maintenance characteristics of facilities or,
4.	Change operations or procedures of the Telephone Company.
B.	In case of any such substitution, change or rearrangement, the transmission parameters will be within the range as set forth in Section 6.4.2. The Telephone Company shall not be responsible if any such substitution, change or rearrangement renders any customer furnished services obsolete or requires modification or alteration thereof or otherwise affects their use or performance. If such substitution, change or rearrangement materially affects the operating characteristics of the facility, the customer will be given adequate notice in writing. Reasonable time will be allowed for any redesign and implementation required by the change in operating characteristics. The Telephone Company will work cooperatively with the customer to determine reasonable notification requirements.

2.4.2	Refusal and Discontinuance of Service	
A.	Unless the provisions of Section 2.4.5B apply, if the customer fails to comply with Sections 2.2.2, 2.5.1A, 2.5.2A, 2.5.5, 2.5.7, 2.5.10 or Section 4, including any payments to be made by it on the dates and times herein specified, the Telephone Company may, on 30 days written notice by Certified US Mail to the person designated by the customer to receive such notices of noncompliance, refuse additional applications for service and/or refuse to complete any pending orders for service at any time thereafter. If the Telephone Company does not refuse additional applications for service on the date specified in the 30 days' notice, and the customer's noncompliance continues, nothing contained herein shall preclude the Telephone Company's right to refuse additional applications for service without further notice.	(C)

2. General Regulations
2.4 Customer Notification and Coordination

2.4.2	Refusal and Discontinuance of Service
B.	Unless the provisions of Section 2.4.5B apply, if the customer fails to comply with Sections 2.5.1A, 2.2.2, 2.5.2A, 2.5.5, 2.5.7 or Section 4, including any payments to be made by it on the dates and times herein specified, the Telephone Company may, on 30 days written notice by Certified US Mail to the person designated by the customer to receive such notices of noncompliance, discontinue the provision of the services involved at any time thereafter. In the case of such discontinuance, all applicable charges, including termination charges, shall become due. If the Telephone Company does not discontinue the provision of the services involved on the date specified in the 30 days notice, and the customer's noncompliance continues, nothing contained herein shall preclude the Telephone Company's right to discontinue the provision of the services involved without further notice.

2.4.3	Service Affecting Activities
A.	The Telephone Company will provide the customer timely notification of service affecting activities that may occur in normal operation of its business. Such activities may include, but are not limited to: equipment or facilities additions, removals or rearrangements, routine preventative maintenance, and major switching machine change out. Generally, such activities are not individual customer service specific; they affect many customer services.
1.	No specific advance notification period is applicable to all service activities. The Telephone Company will work cooperatively with the customer to determine the reasonable notification requirements. With some emergency or unplanned service affecting conditions, such as an outage resulting from cable damage, notification to the customer may not be possible.

2.4.4	Provision and Ownership of Telephone Numbers
A.	The Telephone Company reserves the reasonable right to assign, designate or change telephone numbers, any other call number designations associated with access services, or the Telephone Company serving central office prefixes associated with such numbers, when necessary in the conduct of its business.
B.	Should it become necessary to make a change in such number(s), the Telephone Company will furnish to the customer six months notice, by Certified US Mail, of the effective date and an explanation of the reason(s) for such change(s). In the case of emergency conditions, however, (e.g., a fire in a wire center), it may be necessary to change a telephone number without six month's notice in order to provide service to the customer.

2. General Regulations
2.4 Customer Notification and Coordination

2.4.5	Interference or Impairments
A.	The characteristics and methods of operation of any circuits, facilities or equipment provided by other than the Telephone Company and associated with the facilities utilized to provide services under this tariff shall not interfere with or impair service over any facilities of the Telephone Company, its affiliated companies, or its connecting and concurring carriers involved in its services, cause damage to their plant, impair the privacy of any communications carried over their facilities or create hazards to the employees of any of them or the public.
B.	Except as provided for equipment or systems subject to the FCC Part 68 Rules in 47 C.F.R. Section 68.108, if such characteristics or methods of operation are not in accordance with the preceding paragraph, the Telephone Company will, where practicable, notify the customer that temporary discontinuance of the use of a service may be required; however, where prior notice is not practicable, nothing contained herein shall be deemed to preclude the Telephone Company's right to temporarily discontinue forthwith the use of a service if such action is reasonable under the circumstances. In case of such temporary discontinuance, the customer will be promptly notified and afforded the opportunity to correct the condition which gave rise to the temporary discontinuance.
1.	During such period of temporary discontinuance, credit allowance for service interruptions as set forth in Section 4.2 is not applicable.

2.4.6	Customer Coordination with Respect to Network Contingencies
A.	The Telephone Company intends to work cooperatively with the customer to develop network contingency plans in order to maintain maximum network capability following natural or man made disasters which affect telecommunications services, in accordance with Part 64.401, Appendix A of the FCCs rules and regulations.

2. General Regulations
2.5 Responsibility of The Customer

2.5.1	Scope
A.	The services provided under this tariff shall be maintained by the Telephone Company. The customer or others may not rearrange, move, disconnect, remove or attempt to repair any facilities provided by the Telephone Company, other than by connection or disconnection to any interface means used, except with the written consent of the Telephone Company.
B.	The customer may not assign or transfer the use of services provided under this tariff; however, where there is no interruption of use or relocation of the services, such assignment or transfer may be made to:
1.	Another customer, whether an individual, partnership, association or corporation, provided the assignee or transferee assumes all outstanding indebtedness for such services, and the unexpired portion of the minimum period and the termination liability applicable to such services, if any; or
2.	A court appointed receiver, trustee or other person acting pursuant to law in bankruptcy, receivership, reorganization, insolvency, liquidation or other similar proceedings, provided the assignee or transferee assumes the unexpired portion of the minimum period and the termination liability applicable to such services, if any.
C.	In all cases of assignment or transfer, the written acknowledgment of the Telephone Company is required prior to such assignment or transfer which acknowledgment shall be made within fifteen days from the receipt of notification. All regulations and conditions contained in this tariff shall apply to such assignee or transferee.
D.	The assignment or transfer of services does not relieve or discharge the assignor or transferor from remaining jointly or severally liable with the assignee or transferee for any obligations existing at the time of the assignment or transfer.

2.5.2	Liability
A.	The customer shall reimburse the Telephone Company for damages to Telephone Company facilities utilized to provide services under this tariff caused by the negligence or willful act of the customer or resulting from the customer's improper use of the Telephone Company facilities, or due to malfunction of any facilities or equipment provided by other than the Telephone Company. Nothing in the foregoing provision shall be interpreted to hold one customer liable for another customer's actions. The Telephone Company will, upon reimbursement for damages, cooperate with the customer in prosecuting a claim against the person causing such damage and the customer shall be subrogated to the right of recovery by the Telephone Company for the damages to the extent of such payment.

2. General Regulations
2.5 Responsibility of The Customer

2.5.2	Liability
B.	With respect to claims of patent infringement made by third persons, the customer shall:
1.	Defend, indemnify, protect and save harmless the Telephone Company from and against all claims arising out of the combining with, or use in connection with, the services provided under this tariff, any circuit, apparatus, system or method provided by the customer.
C.	The customer shall defend, indemnify and save harmless the Telephone Company from and against suits, claims, losses or damages including punitive damages, attorneys' fees and court cost by third persons arising out of the construction, installation, operation, maintenance or removal of the customer's circuits, facilities, or equipment connected to the Telephone Company's services provided under this tariff, including, without limitation, workmen's compensation claims, actions for infringement of copyright and/or unauthorized use of program material, libel and slander actions based on the content of communications transmitted over the customer's circuits, facilities or equipment, and proceedings to recover taxes, fines, or penalties for failure of the customer to obtain or maintain in effect any necessary certificates, permits, licenses, or other authority to acquire or operate the services provided under this tariff; provided, however, the foregoing indemnification shall not apply to suits, claims, and demands to recover damages for damage to property, death or personal injury unless such suits, claims or demands are based on the tortious conduct of the customer, its officers, agents or employees.
D.	The customer shall defend, indemnify and save harmless the Telephone Company from and against any suits, claims, losses or damages, including punitive damages, attorneys' fees and court costs by the customer or third parties arising out of any act or omission of the customer in the course of using services provided under this tariff.

2.5.3	Ownership of Facilities and Theft
A.	Facilities utilized by the Telephone Company to provide service under the provisions of this tariff shall remain the property of the Telephone Company. Such facilities shall be returned to the Telephone Company by the customer, whenever requested, within a reasonable period following the request in as good condition as reasonable wear will permit.

2. General Regulations
2.5 Responsibility of The Customer

2.5.4	Equipment Space and Power
A.	The customer shall furnish or arrange to have furnished to the Telephone Company, at no charge, equipment space and electrical power required by the Telephone Company to provide services under this tariff at the points of termination of such services. The selection of ac or dc power shall be mutually agreed to by the customer and the Telephone Company. The customer shall also make necessary arrangements in order that the Telephone Company will have access to such spaces at reasonable times for installing, testing, repairing or removing Telephone Company services.

2.5.5	Availability for Testing
A.	The services provided under this tariff shall be available to the Telephone Company at times mutually agreed upon in order to permit the Telephone Company to make tests and adjustments appropriate for maintaining the services in satisfactory operating condition. Such tests and adjustments shall be completed within a reasonable time. No credit will be allowed for any interruptions involved during such tests and adjustments.

2.5.6	Coordination with Respect to Network Contingencies
A.	The customer shall, in cooperation with the Telephone Company, coordinate in planning the actions to be taken to maintain maximum network capability following natural or man made disasters which affect telecommunications services.

2.5.7	Balance, Current and Noise
A.	All signals for transmission over the services provided under this tariff shall be delivered by the customer balanced to ground except for ground start, duplex (DX) and McCulloh Loop (alarm system) type signaling and dc telegraph transmission at speeds of 75 baud or less.
B.	Signals applied to a metallic facility shall conform to the limitations set forth in technical reference PUB AS No. 1. In the case of application of dc telegraph signaling systems, the customer shall be responsible, at its expense, for the provision of current limiting devices to protect the Telephone Company facilities from excessive current due to abnormal conditions and for the provision of noise mitigation networks when required to reduce excessive noise.

2.5.8	Design of Customer Services
A.	Subject to the provisions of Section 2.4.1, the customer shall be solely responsible, at its own expense for the overall design of its services and for any redesigning or rearrangement of its services which may be required because of changes in facilities, operations or procedures of the Telephone Company, minimum protection criteria or operating or maintenance characteristics of the facilities.

2. General Regulations
2.5 Responsibility of The Customer

2.5.9	References to the Telephone Company	
A.	The customer may advise end users that certain services are provided by the Telephone Company in connection with the service the customer furnishes to end users; however, the customer shall not represent that the Telephone Company jointly participates in the customer's services.	(C)

2.5.10	Jurisdictional Report Requirements	
A.	The regulations set forth in this section apply for purposes of determining the jurisdiction of Switched Access Services.	
B.	**Percent Interstate Usage (PIU)**	
1.	For purposes of developing the projected interstate percentage for Feature Group D, the customer shall consider every call, that originates from a calling party in one state and terminates to a called party in a different state, to be interstate communications. The customer shall consider every call that terminates to a called party within the same state as the state where the calling party is located, to be intrastate communications. The manner in which a call is routed through the telecommunications network does not affect the jurisdiction of a call; i.e., a call between two points within the same state is an intrastate call even if it is routed through another state.	
2.	For Feature Group A and Feature B, pursuant to Federal Communications Commission order FCC 85-145 adopted April 16, 1985, interstate usage is to be developed as though every call, that enters a customer network at a point within the same state as that in which the called station is situated, is an intrastate communication and every call, that enters a customer's network at a point in a state other than that where the called station is situated, is an interstate communication.	
3.	When the Telephone Company receives sufficient call detail to permit it to determine the jurisdiction of some or all originating and terminating access minutes of use, the Telephone Company will use that call detail to render bills for those minutes of use and will not use customer reported Percent Interstate Usage (PIU) factors to determine the jurisdiction of those minutes of use.	
4.	The Telephone Company will apply the PIU factor, either provided by the customer as set forth in (B)(5) or as otherwise determined in accordance with this tariff, only to minutes of use for which the Telephone Company does not have sufficient call detail to determine jurisdiction. The customer reported PIU factor will be used until the customer provides an updated PIU factor, as set forth in (D) following or as determined in (F) following. No prorating or back billing will be done based on the updated report.	(C)

2. General Regulations
2.5 Responsibility of The Customer

2.5.10	Jurisdictional Report Requirements	
B.	**(Continued)**	
5.	When the customer initially orders Switched Access Service(s) the customer will state in its order (Access Service Request) a Percent Interstate Usage factor. This factor will be used by the Telephone Company as the customer-provided PIU factor until the customer provides updated PIU factors, as required in (D) following or as determined in (F) following. For each service listed below, the customer may provide separate PIU factors in accordance with B(1) and B(2) preceding. - Feature Group A (Notes 1,2) - Feature Group B (Notes 1,2) - Feature Group D (Notes 1,2) - 800 Database Access Service (Notes 1,2,3) **Note 1:** The customer has the option to provide the Telephone Company with both an originating and a terminating PIU factor for each account from which the customer may originate and/or terminate traffic. **Note 2:** The Percent Interstate Usage (PIU) factors will apply to all associated elements and services, e.g., Carrier Common Line, Local Switching, Tandem Switched Transport, Access Tandem Switching, Common and Trunk Port service. **Note 3:** 800 Database Access service includes any access service which utilizes the following NPAs: 800, 888, 877, 866, 855, 844, 833, and 822 as they become available to the industry.	(C)
6.	When the customer provides PIU factors, the Telephone Company will subtract the developed PIU from 100 and the difference is the percent intrastate usage. The sum of the interstate and intrastate percentages will equal 100 percent. The customer may only provide a PIU factor that is a whole number (a number from 0 to 100).	
7.	Where the customer provides access services to other carriers, the customer will develop its projected PIU factor based upon a weighted average of the PIUs of its own and of the other carriers' end user traffic, in accordance with the procedures described below.	(C)

2. General Regulations
2.5 Responsibility of The Customer

2.5.10	Jurisdictional Report Requirements	
C.	**Switched Access Service Entrance Facilities, Direct Trunked Transport** - Customers will provide PIU factors and jurisdictional reports for Switched Access Entrance Facilities and Direct-Trunked Transport ordered pursuant to this tariff, reflecting all Switched Access services using these facilities as set forth in (1) following	(C)
1.	**Entrance Facilities and Direct Trunked Transport Facilities**	
a.	The customer may provide separate PIU factors that will apply to the Entrance Facilities and the Direct Trunked portion of the facility account. These PIU factors should account for the originating and terminating traffic of all services using these facilities	
b	If a customer has previously submitted a letter to be placed on file which identifies individual PIU factors, the customer has the option of stating in its orders that the PIU factors contained in its letter on file (LOF) be applied to the facilities contained in the order. This PIU factor may be provided at the account level or for each individual facility.	
c	If a customer is providing or sharing a facility with other carriers, the PIU for the Entrance Facilities and Direct Trunked Transport may be developed using multiple PIU factors. The calculation to determine the facility PIU using factors must be provided with the quarterly jurisdictional report.	
D.	**Jurisdictional Report Updates**	
1.	Effective on the first of January, April, July and October of each year, the customer will update the interstate and intrastate jurisdictional reports. The customer will forward to the Telephone Company, to be received no later than 20 days after the first of each such month, a revised report or letter for all services showing the interstate percentage of use for the past three months ending the last day of December, March, June and September, respectively, for each service arranged for interstate and intrastate use.	
2.	The revised report or letter will serve as the basis for the next three months' billing and will be effective on the bill date for that service. If the customer does not supply an updated quarterly report or letter, the Telephone Company will assume percentages to be the same as those provided in the last quarterly report or letter accepted by the Telephone Company or as determined by the provisions contained in (F) following.	
3.	For those cases in which a quarterly report or letter has never been received from the customer, the Telephone Company will assume the PIU factors to be the same as provided in the order for service.	(C)

2. General Regulations
2.5 Responsibility of The Customer

2.5.10	Jurisdictional Report Requirements	
E.	**Maintenance of Customer Records**	(C)
1.	The customer shall retain for a minimum of twelve months call detail records that substantiate the interstate percent provided to the Telephone Company as set forth in (B), (C) and (D) preceding for Switched Access Service. Such records shall consist of (a) and (b) following, if applicable:	
a.	All call detail records such as work papers and/or backup documentation including paper, magnetic tapes or any other form of records for billed customer traffic, call information including call terminating address (i.e., called number), the call duration, all originating and terminating trunk groups or access lines over which the call is routed, and the point at which the call enters the customer's network and;	
b.	If the customer has a mechanized system in place that calculated the PIU, then a description of that system and the methodology used to calculate the PIU must be furnished and any other pertinent information (such as but not limited to flowcharts, source code, etc.) relating to such system must also be made available.	
F.	**Jurisdictional Report Verification**	
1.	The Telephone Company may request the customer to verify their jurisdictional reports. The customer shall keep records of call detail from which the percentage of interstate and intrastate use can be ascertained. The Telephone Company will request the customer to provide the records of call detail and other information (as specified in (E) preceding) that the customer used to determine the percentage of interstate and intrastate use. No more than one verification request will be made per year.	
a.	The Customer shall supply the data to the Telephone Company within 30 days of the Telephone Company request. The Telephone Company will request data for the four prior quarters unless a shorter period is requested by the Customer and agreed to by the Telephone Company.	
2.	If the PIU factors filed by the customer cannot be validated by the data provided, and the data provided by the customer is sufficient to calculate a PIU factor different than the customer's reported PIU factor, the Telephone Company will use these records to:	
a.	Revise the customer's PIU factor.	
b.	Calculate the interstate and intrastate access charges that should have been billed to the customer for the prior period (as specified in (E) preceding), that the inaccurate PIUs had been used and debit or credit the customer for the difference between the charges that should have been billed with the revised PIU and the charges that were billed.	(C)

2. General Regulations
2.5 Responsibility of The Customer

2.5.10	Jurisdictional Report Requirements	
F.	**Continued**	(C)
3.	If the customer fails to supply data (as specified in (E) preceding) within 45 calendar days of the Telephone Company's request, sufficient for the Telephone Company to substantiate or determine PIU factors, then:	
a.	The Telephone Company will apply a default PIU factor of 50% to the traffic for which the Telephone Company does not have sufficient call detail to determine the jurisdiction of the traffic ("unknown jurisdiction" usage) (i.e., 50% of the unknown jurisdiction usage will be billed under the interstate jurisdiction and 50% of the unknown jurisdiction usage will be billed under the intrastate tariff) in lieu of the PIU factors last submitted by the customer	
b.	The Telephone Company will apply the default PIU factor to all future access minutes of use with unknown jurisdiction beginning with the first bill date following the 45 calendar day period during which the customer was to submit the records of call detail requested by the Telephone Company. The application of the default PIU factor will continue until the customer provides the Telephone Company with records of call detail or other data that are sufficient for the Telephone Company to substantiate the customer-provided PIU factors.	
G.	**Contested Jurisdictional Reports**	
1.	If after reviewing the data provided by the customer the Telephone Company determines that that the customer-provided PIUs are inaccurate, the Telephone Company will report the results of the analysis to the customer by Certified U.S. Mail (return receipt requested). The Telephone Company will request that the customer provide updated PIU factors consistent with those contained in the Telephone Company's report.	
2.	If the Telephone Company applies the revised or default PIU factor to the customer's account as provided in (F) preceding in lieu of the customer-provided PIU factor, the customer may contest application of the default PIU by providing written notification, by Certified U.S. Mail (return receipt requested), to the Telephone Company within thirty (30) calendar days from the date the revised or default PIU is applied or the date that the Telephone Company provides notice to the customer of its decision to apply the revised or default PIU. The customer may request that the dispute be resolved by a neutral arbitrator mutually agreed upon by the Telephone Company and the customer. Arbitration is an option provided in addition to the customer's existing right to file a complaint or legal action in a court of law or at the New Hampshire Public Utilities Commission for resolution of the dispute. The arbitration hearing will be conducted in a location within the Telephone Company operating territory where the customer maintains its principal place of business or at a location within the Telephone Company operating territory that is mutually agreed upon by both parties. The arbitration procedures shall be governed by the law (both statutory and case) of the state in which the arbitration hearing is held, including, but not limited to, the Uniform Arbitration Act, as adopted. The arbitrator shall determine the customer's PIU for each category of traffic based on the standards in (B) and (C) preceding.	(C)

2. General Regulations
2.5 Responsibility of The Customer

2.5.10 Jurisdictional Report Requirements

G. Continued (C)

3. Prior to the arbitration hearing, each party shall notify the arbitrator of the PIU factor(s) which that party believes to be correct. The arbitrator, in deciding, may adopt the PIU percentage of either party or may adopt a PIU different from those proposed by the parties. If the arbitrator adopts a PIU proposed by one of the parties, the other party (whose PIU was not adopted) shall pay all costs of the arbitration. If the arbitrator adopts a PIU percentage higher than either of the PIU proposed by the parties, then the party proposing the lower PIU shall pay all costs of the arbitration. If the arbitrator adopts a PIU lower than either of the PIU proposed by the parties, then the party proposing the higher PIU shall pay all costs of the arbitration. If the arbitrator adopts a PIU which falls between the two percentages adopted by the parties, then the parties shall each pay one-half of the arbitration costs.
4. The PIU factor(s) for each category of traffic determined by the arbitrator will be applied by the Telephone Company to all future access minutes of use with unknown jurisdiction from that customer until the customer provides the Telephone Company with records of call detail or other data that are sufficient for the Telephone Company to substantiate the customer-provided PIU factors.
5. Absent the customer's written notification, within the timeframe noted above, the customer must comply with the provisions set forth in (E) and (F) preceding. If the customer fails to comply with these provisions, the customer will be in violation of this Tariff and the Telephone Company may refuse additional applications for service and/or refuse to complete any and all pending orders for service or may discontinue the provision of services to the customer as specified in Section 2.4.2 preceding.
6. The Telephone Company retains the right to pursue any and all other legal remedies, whether in addition to, or in lieu of, the above procedures, to recover any under-billed switched access charges associated with incorrect customer-provided PIU factors under the applicable interstate or intrastate tariffs. (C)

2. General Regulations
2.5 Responsibility of The Customer

2.5.11	Determination of Intrastate Charges for Mixed Interstate and Intrastate Access Service
A.	When mixed interstate and intrastate access service is provided, all charges (i.e., NRC, monthly and/or usage) including optional features charges, will be prorated between interstate and intrastate. The percentages (refer to Section 2.5.10) will serve as the basis for calculating the charges. The intrastate percentages will change as revised usage reports are submitted or a revised percentage is calculated as set forth in Section 2.5.10. The percentages of an access service to be charged as intrastate are applied in the following manner.
1.	For monthly and/or usage and nonrecurring chargeable rate elements associated with access services, multiply the intrastate percent times the quantity of chargeable elements times the state tariff rate per element.
2.	For usage sensitive (i.e., access minutes) chargeable rate elements, multiply the percent intrastate use times actual use (i.e., measured or Telephone Company assumed average use) times the state tariff rates.

3. Ordering of Service

3.1 Ordering, Rating and Billing of Access Services Where More Than One Exchange Telephone Company is Involved

3.1.1	General
A.	Regulations, rates and charges for ordering provisions applicable to switched access service offered and ordered under this tariff are the same as those set forth in Bell Atlantic Telephone Companies Tariff FCC No. 11, Section 5 and Section 6.1.7.
1.	In addition, the following regulations apply. Provisions for the cancellation of an order for service are set forth in Bell Atlantic Telephone Companies Tariff FCC No. 11, Section 5.2.3.

3.1.2	Meet Point Billing
A.	**General**—Where more than one exchange telephone company is involved in the provision of access service the Telephone Company will handle ordering, rating and billing of access services under this tariff as follows.
1.	The regulations contained herein are illustrated in Exhibit 3.1.2-1.
B.	**FGC Availability**—For regulations pertaining to FGC, note that as of August 21, 1992 FGC is available from end offices in operating territories of only exchange telephone companies other than New England Telephone.
C.	When service(s) is provided where one end of the local transport element is in the Telephone Company operating territory and the other is in another exchange telephone company operating territory, the customer will provide on the first business day of each calendar month a record of usage data and the other exchange telephone company associated with it. This information will be used to calculate billing.
D.	Each exchange telephone company will provide the portion of the local transport element in its operating territory to an IP with another exchange telephone company and will bill the charges in accordance with its access service tariff. The charges for the local transport element will be determined as described in Section 3.1.2K and 3.1.2L. All other appropriate charges in each exchange telephone company tariff are applicable.
E.	The IP will be determined by the exchange telephone companies involved.

3. Ordering of Service

3.1 Ordering, Rating and Billing of Access Services Where More Than One Exchange Telephone Company is Involved

3.1.2	Meet Point Billing
F.	When a WAL service is ordered and channel mileage applies (i.e., the WATS service office and the end user's end office are not coterminous) and one end of the channel mileage element is in the Telephone Company operating territory and the other end is in another exchange telephone company operating territory, the exchange telephone company in whose operating territory the end office is located must receive the order from the customer. The exchange telephone company in whose territory the WSO is located must also receive a copy of the order from the customer. Each exchange telephone company will provide the portion of the channel mileage element in its operating territory to an IP with another exchange telephone company and will bill the charges in accordance with its access service tariff. The rate for the channel mileage element will be determined as described in Section 3.1.2K and 3.1.2L. All other appropriate charges in each exchange telephone company tariff are applicable.
G.	When FGA switched access service is ordered by a customer where one end of the local transport element is in the Telephone Company operating territory and the other end is in another exchange telephone company operating territory, the exchange telephone company in whose territory the first point of switching is located will accept the order.
1.	The exchange telephone company in whose territory the customer point of termination is located must also receive a copy of the order from the customer.
2.	The exchange telephone company that accepts the order will then determine the charges involved, arrange to provide the access service ordered and bill the charges in accordance with its access service tariff.
H.	When an FGB switched access service is ordered by a customer where one end of the local transport element is in the Telephone Company operating territory and the other end is in another exchange telephone company operating territory, and when notified by the Telephone Company which accepts the order that the involved exchange telephone companies cannot implement multi-company billing (meet point billing), ordering, provisioning, rating and billing regulations, as set forth for FGA in the preceding paragraphs will also apply to FGB.
I.	Except as set forth in Section 3.1.2H, when FGB, FGC and/or FGD switched access service and/or directory assistance service is ordered by a customer where one end of the local transport element is in the Telephone Company operating territory and the other end is in another exchange telephone company operating territory, the orders shall be received as follows.
1.	For FGC and/or directory assistance service, the exchange telephone company in whose operating territory the end office is located must receive the order from the customer. The exchange telephone company in whose territory the customer premises is located must also receive a copy of the order from the customer.

3. Ordering of Service
3.1 Ordering, Rating and Billing of Access Services Where More Than One Exchange Telephone Company is Involved

3.1.2	Meet Point Billing
I.	(Continued)
2.	For FGB and/or FGD switched access service ordered to an end office, the exchange telephone company in whose operating territory the end office is located must receive the order from the customer. The exchange telephone company in whose territory the customer premises is located must also receive a copy of the order from the customer.
3.	For FGB and/or FGD switched access service ordered to an access tandem, the exchange telephone company in whose territory the access tandem is located must receive the order from the customer. The exchange telephone company in whose territory the customer premises is located must also receive a copy of the order from the customer.
J.	When switched access service involving a hub is ordered by a customer where one end of the channel mileage element is in an exchange telephone company operating territory and the hub is in another exchange telephone company operating territory, the exchange telephone company in whose territory the hub is located must receive the order from the customer. The exchange telephone company in whose territory a customer premises is located must receive copies of the order from the customer. Each exchange telephone company will provide the portion of the channel mileage element in its operating territory to an IP with another exchange telephone company and will bill the charges in accordance with its access service tariff. The rate for the channel mileage element will be determined as set forth in Section 3.1.2K. All other appropriate charges in each exchange telephone company tariff are applicable.
K.	The provisions of meet point billing are applicable to local transport termination and facility and switched access channel mileage recurring charges only. All other recurring charges and NRCs for services provided by each exchange telephone company are billed under each company's applicable rates.
1.	Determine the appropriate local transport facility or switched access or special access channel mileage by computing the airline mileage between the two ends of the local transport facility or local transport channel mileage or special access channel mileage elements.
2.	Determine the airline mileage for the local transport channel mileage or local transport facility charge using the V&H Coordinate method as set forth in NECA Tariff FCC No. 4. Determine the airline mileage for the channel mileage element using the V&H coordinate method.
L.	For FGB, FGC and FGD and switched access services with tandem switched transport, the local transport charges are determined as follows.
1.	Multiply the number of access minutes by the number of airline miles determined in Section 3.1.2K by the Telephone Company's appropriate local transport facility per mile per access minute rate.

3. Ordering of Service
3.1 Ordering, Rating and Billing of Access Services Where More Than One Exchange Telephone Company is Involved

3.1.2	Meet Point Billing
L.	(Continued)
2.	Multiply the product determined in Section 3.1.2L1 by the Telephone Company's billing percentage factor.
3.	Divide the product determined in Section 3.1.2L2 by 100. (The resulting amount is the total local transport facility charge).
4.	Multiply the number of access minutes by the Telephone Company's appropriate local transport termination per minute rate.
5.	Divide the product determined in Section 3.1.2L4 by two. (The resulting amount is the total local transport termination charge).
6.	Add the resulting amounts obtained in Section 3.1.2L3 and Section 3.1.2L5. (This will result in the total local transport charges).
M.	For FGB, FGC and FGD switched access service with direct trunked transport, determine the rate (utilizing both the fixed and per mile local transport channel mileage rate elements) for the airline mileage determined in Section 3.1.2J. Multiply such rate by the Telephone Company's billing percentage factor and divide by 100 to obtain the local transport channel mileage element charges.
N.	The BP factor for the Telephone Company for the service between the two involved offices is listed in NECA Tariff FCC No. 4.

3. Ordering of Service
3.1 Ordering, Rating and Billing of Access Services Where More Than One Exchange Telephone Company is Involved

3.1.2 Meet Point Billing

Exhibit 3.1.2-1
Meet Point Billing

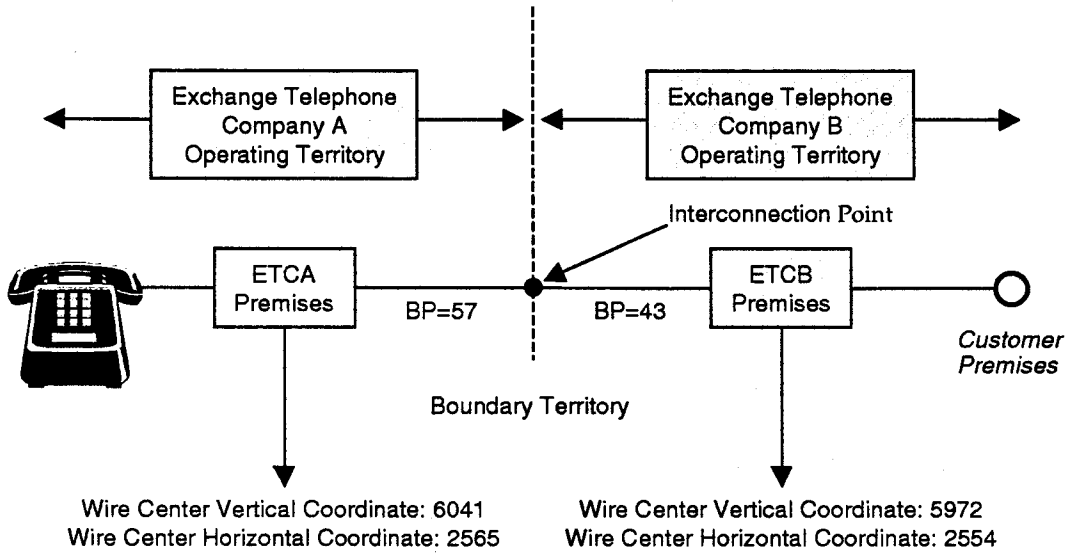

ASSUMPTIONS

Assume FGB, FGC, or FGD is ordered to End Office A; End Office A is in the operating territory of exchange telephone company A; and the premises of the ordering customer is in the operating territory of exchange company B.

4. Issuance, Payment and Crediting of Customer Bills
4.1 Undertaking of the Telephone Company

4.1.1	Billing Convention Methods
A.	The Telephone Company shall bill on a current basis all charges incurred by and credits due to the customer under this tariff, attributable to services established or discontinued or provided during the preceding billing period.
B.	The Telephone Company shall bill in advance charges for all services to be provided during the ensuing billing period except for charges associated with service usage and for the federal government which will be billed in arrears.

4.1.2	Late Payment Penalty
A.	If any portion of the payment is received by the Telephone Company after the payment date (refer to Section 4.1.4), or if any portion of the payment is received by the Telephone Company in funds which are not immediately available to the Telephone Company, then a late payment penalty shall be due to the Telephone Company.
B.	The late payment penalty shall be the portion of the payment not received by the payment date times a late factor. The late factor shall be 0.0005 per day for the number of days from the payment date to and including the date that the customer actually makes the payment to the Telephone Company.

4.1.3	Billing Periods
A.	The billing date of a bill for a customer for access service provided under this tariff is referred to as the bill day. The period of service each bill covers is as follows.
1.	The Telephone Company will establish a bill day each month for each customer account.
2.	The bill will cover non usage sensitive service charges for the ensuing billing period for which the bill is rendered, any known unbilled non usage sensitive charges for prior periods and unbilled usage charges for the period after the last bill day through the current bill day. Any known unbilled usage charges for prior periods and any known unbilled adjustments will be applied to this bill.

4.1.4	Payment Date
A.	The payment date of bills rendered to customers for access service provided under this tariff is as follows.
1.	All bills dated as set forth in Section 4.1.3 for service, provided to the customer by the Telephone Company, are due 31 days after the bill day or by the next bill date (i.e., same date in the following month as the bill date), whichever is the shortest interval, except as provided herein.

4. Issuance, Payment and Crediting of Customer Bills
4.1 Undertaking of the Telephone Company

4.1.4	Payment Date
A.	(Continued)
2.	If such payment date would cause payment to be due on a Sunday or on a Legal Holiday which is observed on a Monday, the payment date shall be the first non holiday day following such Sunday or Legal Holiday.
3.	If such payment date falls on a Saturday or on a Legal Holiday which is observed on Tuesday, Wednesday, Thursday or Friday, the payment date shall be the last non-holiday day preceding such Saturday or Legal Holiday.
B.	If payment is not received by the payment date or if payment is not in immediately available funds, a late payment penalty will apply (refer to Section 4.1.2).

4.1.5	Medium of Payment
A.	Bills are payable in immediately available funds.
1.	**Immediately Available Funds** denotes a corporate or personal check drawn on a bank account and funds which are available for use by the receiving party on the same day on which they are received and include US Federal Reserve bank wire transfers, US Federal Reserve notes (paper cash), US coins and US Postal Money Orders.

4.1.6	Customer Deposits
A.	The Telephone Company will, in order to safeguard its interests, require only a customer which has a proven history of late payments to the Telephone Company or does not have established credit except for a customer which is a successor of a company which has established credit and has no history of late payments to the Telephone Company, to make a deposit prior to or at any time after the provision of a service to the customer to be held by the Telephone Company as a guarantee of the payment of rates and charges.
B.	Such deposit may not exceed the actual or estimated rates and charges for the service for a two month period.
C.	The fact that a deposit has been made in no way relieves the customer from complying with the Telephone Company's regulations as to the prompt payment of bills.
D.	At such time as the provision of the service to the customer is terminated, the amount of the deposit will be credited to the customer's account and any credit balance which may remain will be refunded.
E.	At the option of the Telephone Company, such a deposit will be refunded or credited to the customers' account when the customer has established credit or after the customer has established a one year prompt payment record at any time prior to the termination of the provision of the service to the customer.

4. Issuance, Payment and Crediting of Customer Bills
4.1 Undertaking of the Telephone Company

4.1.6	Customer Deposits
F.	In case of a cash deposit, for the period the deposit is held by the Telephone Company, the customer will receive interest at the same percentage rate as that set forth in Section 4.1.2B. Interest will accrue for the number of days from the date the customer deposit is received by the Telephone Company to and including the date such deposit is credited to the customer's account or the date the deposit is refunded by the Telephone Company.
G.	Should a deposit be credited to the customer account, as indicated above, no interest will accrue on the deposit from the date such deposit is credited to the customer's account.

4.1.7	Nonrecurring Charges
A.	At the option of the customer, all NRCs associated with a standard or negotiated interval access order may be billed over a three month period in monthly installments subject to the following.
1.	All NRCs associated with a given access order must be billed in monthly installments.
2.	The total of the NRCs associated with a given access order must be $500.00 or more.
3.	50% of the total NRCs will be billed in the first monthly billing period after the charges are incurred, and 25% of the total NRCs plus a service charge will be billed in each of the following two monthly billing periods. The service charge is a fraction of the total remaining NRCs. The service charge is calculated as follows.
a.	30 times the decimal value set forth in Section 4.1.2B, times the total remaining NRCs equals the service charge.
4.	The customer must request installment billing on or before the application date for a standard or negotiated interval access order. The customer may elect to pay the unbilled charges before the expiration of the installment plan. More than one installment plan may be in effect for the same customer at the same time. If the customer disconnects service before the expiration of the plan period, all unbilled charges plus a service charge, if applicable, will be included in the final bill rendered.
B.	NRCs apply for establishing service following fire, flood or other occurrence, at a different location on the same premises or at a different premises pending reestablishment of service at the original location. NRCs do not apply for the reestablishment of service following a fire, flood or other occurrence attributed to an Act of God provided that:
1.	The service is of the same type as was provided prior to the fire, flood and other occurrence.
2.	The service is for the same customer and the service is at the same location on the same premises.

4. Issuance, Payment and Crediting of Customer Bills
4.1 Undertaking of the Telephone Company

4.1.7	Nonrecurring Charges
B.	(Continued)
3.	The reestablishment of service begins within sixty days after Telephone Company service is available. The sixty day period may be extended a reasonable period if the renovation of the original location on the premises affected is not practical within the allotted time period.

4.1.8	Billing Dispute
A.	In the event that a billing dispute occurs concerning any charges billed to the customer by the Telephone Company the regulations contained in Section 4.1.8 will apply.
B.	The first day of the dispute shall be the date on which the customer furnishes the Telephone Company with the account number under which the bill has been rendered, the date of the bill and the specific items on the bill being disputed.
C.	The date of resolution shall be the date on which the Telephone Company completes its investigation of the dispute, notifies the customer of the disposition and, if the billing dispute is resolved in favor of the customer, applies credit for the correct disputed amount, the disputed amount penalty and/or late payment penalty as appropriate.
D.	If a billing dispute is resolved in favor of the Telephone Company, any payments withheld pending resolution of the dispute shall be subject to the late payment penalty. Further, the customer will not receive credit for the disputed amount or the disputed amount penalty.
E.	If a customer disputes a bill within three months of the payment date and pays the total billed amount on or before the payment date and the billing dispute is resolved in favor of the customer, the customer will receive a credit for a disputed amount penalty from the Telephone Company for the period starting with the date of payment and ending on the date of resolution. The credit for the disputed amount penalty shall be as set forth following.
F.	If a customer disputes a bill within three months of the payment date and pays the total billed amount after the payment date and the billing dispute is resolved in favor of the customer, the customer will receive a credit for a disputed amount penalty from the Telephone Company for the period starting with the date of payment and ending on the date of resolution. The credit for the disputed amount penalty shall be as set forth following. The late payment penalty (refer to Section 4.1.2) applied to the disputed amount resolved in the customer's favor will be credited.

4. Issuance, Payment and Crediting of Customer Bills
4.1 Undertaking of the Telephone Company

4.1.8	Billing Dispute
G.	If a customer disputes a bill within three months of the payment date and does not pay the disputed amount or does not pay the billed amount (i.e., the nondisputed and disputed amount), and the billing dispute is resolved in favor of the customer, the customer will not receive a credit for a disputed amount penalty from the Telephone Company. The late payment penalty (refer to Section 4.1.2A and 4.1.2B) applied to the disputed amount resolved in the customer's favor will be credited.
H.	If a customer disputes a bill after three months from the payment date and pays the total billed amount on or before the dispute date, and the billing dispute is resolved in favor of the customer, the customer will receive a credit for a disputed amount penalty from the Telephone Company for the period starting with the date of dispute and ending on the date of the resolution. The credit for a disputed amount penalty shall be as set forth following. The customer shall not receive a credit for the late payment penalty.
I.	If a customer disputes a bill after three months from the payment date and does not pay the disputed amount or does not pay the billed amount (i.e., the nondisputed amount and disputed amount) and the billing dispute is resolved in favor of the customer, the customer will not receive a credit for a disputed amount penalty from the Telephone Company. However, if the customer pays the disputed amount or the billed amount after the date of dispute and before the date of resolution, the customer will receive a credit for a disputed amount penalty from the Telephone Company for the period starting with the date of payment and ending on the date of resolution. The credit for the disputed amount penalty shall be as set forth following. The customer will receive a credit for the late payment penalty, if applicable, from the Telephone Company.
1.	The late payment penalty credit shall be the disputed amount resolved in the customer's favor times a late payment penalty factor (refer to Section 4.1.2), for the period starting with the date of dispute and ending on the date of payment of the disputed amount or the date of resolution whichever occurs first.
2.	The disputed amount penalty shall be the disputed amount resolved in the customer's favor times a penalty factor. The penalty factor shall be 0.0005 per day for the number of days from the first date to and including the last date of the period involved.

4.1.9	Billing Adjustments and Verification
A.	Adjustments for the quantities of services established or discontinued in any billing period beyond the minimum period set forth for services in other sections of this tariff will be prorated to the number of days or major fraction of days based on a thirty day month. The Telephone Company will, upon request and if available, furnish such detailed information as may reasonably be required for verification of any bill.

4. Issuance, Payment and Crediting of Customer Bills
4.1 Undertaking of the Telephone Company

4.1.10	Computation of Billed Charges
A.	When a rate as set forth in this tariff is shown to more than two decimal places, the charges will be determined using the rate shown. The resulting amount will then be rounded to the nearest penny (i.e., rounded to two decimal places).

4.1.11	Additional Copies of Bills
A.	When more than one copy of a customer bill for services provided under the provisions of this tariff is furnished to the customer, an additional charge applies for each additional copy of the bill as set forth in Section 13.

4.1.12	Meet Point Billing
A.	Where more than one exchange telephone company is involved in the provision of access service, the Telephone Company will bill such access services in accordance with the regulations set forth in Section 3.1.

4. Issuance, Payment and Crediting of Customer Bills
4.2 Credit Allowance Conditions

4.2.1	Service Interruptions
A.	A service is interrupted when it becomes unusable to the customer because of a failure of a facility component used to furnish service under this tariff or in the event that the protective controls applied by the Telephone Company result in the complete loss of service by the customer as described in Bell Atlantic Telephone Companies Tariff FCC No. 11, Section 6.5.1. An interruption period starts when an inoperative service is reported to the Telephone Company and ends when the service is operative.
B.	No credit allowance will be made for:
1.	Interruptions caused by the negligence of the customer.
2.	Interruptions of a service due to the failure of equipment or systems provided by the customer or others.
3.	Interruptions of a service during any period in which the Telephone Company is not afforded access to the premises where the service is terminated.
4.	Interruptions of a service when the customer has released that service to the Telephone Company for maintenance purposes, to make rearrangements, or for the implementation of an order for a change in the service during the time that was negotiated with the customer prior to the release of that service. Thereafter, a credit allowance (set forth further in Section 4.2.1C), will apply.
5.	Periods when the customer elects not to release the service for testing and/or repair and continues to use it on an impaired basis.
6.	Periods of temporary discontinuance as set forth in Section 2.4.5B.
7.	An interruption or a group of interruptions, resulting from a common cause, for amounts of less than one dollar.
C.	In case of an interruption to any service, for which a credit allowance is due (refer to Section 4.2.1B), allowance for the interruption shall be as follows.
1.	For switched access service, other than switched access service entrance facilities and direct trunked transport facilities, no credit shall be allowed for an interruption of less than 24 hours. The customer shall be credited for an interruption of 24 hours or more at the rate of 1/30 of the sum of either any applicable monthly rates, or the assumed minutes of use charge, when applicable for the service involved, for each period of 24 hours or major fraction thereof that the interruption continues.
2.	The credit allowance(s) for an interruption or for a series of interruptions shall not exceed the sum of either any applicable monthly rate, or the assumed minutes of use charge; whichever is applicable for the service involved, for the service interrupted in any one monthly billing period.
3.	For switched access service entrance facilities and direct trunked transport facilities no credit shall be allowed for an interruption of less than 30 minutes.

4. Issuance, Payment and Crediting of Customer Bills
4.2 Credit Allowance Conditions

4.2.1	Service Interruptions
C.	(Continued)
4.	The monthly charges used to determine credit for switched access service entrance facilities and direct trunked transport facilities, shall be the total of all the monthly rate element charges associated with that portion of the service that is inoperative (e.g. if the entrance facility is inoperative, the customer will be credited at the appropriate monthly rate for the entrance facility and any direct trunked transport provided over the inoperative entrance facility).
D.	Should the customer elect to use an alternative service provided by the Telephone Company during the period that a service is interrupted, the customer must pay the tariffed rates and charges for the alternative service used.
E.	In certain instances, the customer may be requested by the Telephone Company to surrender a service for purposes other than maintenance, testing or activity relating to a service order. If the customer consents, a credit allowance will be granted.
1.	The credit allowance will be 1/1440 of the monthly rate for each period of 30 minutes or fraction thereof that the service is surrendered. In no case will the credit allowance exceed the monthly rate for the service surrendered in any one monthly billing period.

5. Carrier Common Line Access Service
5.1 General

Carrier common line access service is billed to each switched access service provided under this tariff in accordance with the regulations as set forth herein and in Section 4.1, and at the rates and charges contained in Section 30.5.

5.1.1	Description
A.	Carrier common line access provides for the use of end users' Telephone Company provided common lines by customers for access to such end users to furnish intrastate communications. Carrier common line access also provides for the use of switched access service terminating in 800 database access line service.
1.	The Telephone Company will provide carrier common line access service to customers in conjunction with switched access service provided in Section 6.
B.	The CCSA STP link termination and STP port, as set forth in Section 6, are not subject to a carrier common line charge.

5.1.2	Limitations
A.	A telephone number is not provided with carrier common line access.
B.	Detail billing is not provided for carrier common line access.
C.	Directory listings are not included in the rates and charges for carrier common line access.
D.	Intercept arrangements are not included in the rates and charges for carrier common line access.
E.	All trunkside connections provided in the same access group will be limited to the same features and operating characteristics.
F.	All lineside connections provided in the same access group will be limited to the same features and operating characteristics.

5. Carrier Common Line Access Service
5.2 Undertaking of the Telephone Company

5.2.1	Scope
A.	Where the customer is provided with switched access service under this tariff, the Telephone Company will provide the use of Telephone Company common lines by a customer for access to end user.
B.	When the customer reports interstate and intrastate use of switched access service, the associated carrier common line access used by the customer for both interstate and intrastate will be apportioned as set forth in Section 5.4.2C.

5. Carrier Common Line Access Service
5.3 Obligations of the Customer

5.3.1	Reselling MTS/MTS Type Service
A.	Where the customer is reselling MTS and/or MTS type service(s) on which the carrier common line access and switched access charges have been assessed, the customer will obtain FGA, FGB or FGD switched access service under this tariff (refer to Section 6) for originating and/or terminating access in the local exchange.
1.	Such access group arrangements whether single trunks or trunk groups will have carrier common line access charges applied.

5.3.2	Customer Facilities
A.	The customer facilities at the premises of the ordering customer shall provide the necessary on hook and off hook supervision.

5. Carrier Common Line Access Service
5.4 Rate Regulations

5.4.1	Application of Rates and Charges
A.	**General**—Except as set forth herein, all switched access service provided to the customer will be subject to carrier common line access charges.
B.	When access to the local exchange is required to provide a customer service (e.g., MTS type, Telex, Data, etc.) that uses resold IC's private line service, switched access service rates and regulations as set forth in Section 6 will apply except when such access to the local exchange is required for the provision of an enhanced service. Carrier common line access rates and charges apply.
C.	The switched access service provided by the Telephone Company includes the switched access service provided for both interstate and intrastate communications. The carrier common line access rates and charges will be billed to each switched access service provided under this tariff in accordance with Section 4.1 and Section 5.4.2.
D.	Where switched access services connect with private line type services at Telephone Company designated WSOs for provision of WATS or WATS type services, switched access service minutes which are carried on that end of the service (i.e., originating minutes for outward WATS and WATS type services) will be assessed carrier common line access per minute charges.

5.4.2	Determination of Charges
A.	When carrier common line access is provided in association with FGA or FGB switched access service in Telephone Company offices that are not equipped for measurement capabilities, assumed average intrastate access minutes will be used to determine carrier common line access charges. The assumed access minutes are as set forth in Section 6.4.4.
B.	When access minutes are used to determine carrier common line access charges, they will be accumulated using call detail recorded by Telephone Company equipment.
1.	The Telephone Company measuring and recording equipment will be associated with end office or local tandem switching equipment and will record originating access minutes and terminating access minutes where answer supervision is received.
2.	The accumulated access minutes will be summed on a line by line basis, by line group or end office, whichever type of account is used by the Telephone Company, for each customer and then rounded to the nearest minute.
C.	When the customer reports interstate and intrastate use of switched access service, the carrier common line access minutes developed by the Telephone Company, will be multiplied by percentages reported by the customer (refer to Section 2.5.10). The result will then be used to determine the carrier common line charges. The charges for the involved customer account will be determined as follows.
1.	The access minutes for all switched access service subject to carrier common line charges will be multiplied by the per minute rate.

5. Carrier Common Line Access Service
5.4 Rate Regulations

5.4.2	Determination of Charges
C.	(Continued)
2.	The terminating switched access per minute charge applies to all non 800 access terminating access minutes of use. The terminating switched access per minute charge also applies to all terminating 800 access minutes of use which terminate on a common line. The number of such minutes will be obtained from reports furnished by the customer (refer to Section 2.5.10).
3.	The terminating 800 database access service per minute charge applies to all 800 terminating usage which terminates in a WAL service as provided from Bell Atlantic Telephone Companies Tariff FCC No. 11. The number of such minutes will be obtained from reports furnished by the customer (refer to Section 2.5.10).
4.	The originating switched access per minute charge applies to all non 800 originating access minutes of use less those originating access minutes of use associated with FGA access services where the off hook supervisory signaling is forwarded by the customer's equipment when the called party answers.
5.	The originating 800 database access specific per minute charge applies to all originating access minutes of use associated with calls placed to 800 numbers. The originating 800 specific access per minute charge also applies to all originating usage which terminates in a WAL service as provided from Bell Atlantic Telephone Companies Tariff FCC No. 11. The number of such minutes will be obtained from reports furnished by the customer (refer to Section 2.5.10).

5.4.3	One Time Credit
A.	The Telephone Company will provide a one time credit based on applying a credit amount to each customer's carrier common line usage from April 15, 1997 through full billing periods beginning October 15, 1997 through November 14, 1997.

6. Switched Access Service
6.1 General

6.1.1	Reference to Tariff Provisions
A.	Switched access service is ordered under the access order provisions set forth in Section 3 and billed at the rates and charges set forth in Section 30. In addition to regulations which are contained within this tariff, other regulations pertinent to these services are specified in Bell Atlantic Telephone Companies Tariff FCC No. 11, Section 6 apply as appropriate (unless otherwise stated in this tariff) for the services specified in Section 6.1.2 of this tariff.

6.1.2	Service Structure
A.	The switched access services provided under this tariff are: originating, terminating, or two way FGA, FGB, FGD and FG2A, and 800 database access.
B.	The rate categories which apply to switched access service are as follows.
1.	Local transport (described in Section 6.2.1)
2.	Local switching (described in Sections 6.2.2 and 6.2.3)
3.	Carrier common line (described in Section 5).
C.	WAL service is a type of special access service that is provided for use with FGB and/or FGD. WAL service connects an end user premises with a WATS or WSO. This service is ordered and provisioned under Bell Atlantic Telephone Companies Tariff FCC No. 11, Section 7.
D.	Local transport, local switching and carrier common line when combined to provide a complete switched access service is as illustrated in Exhibit 6.1.2-1.

6. Switched Access Service
6.1 General

6.1.2 Service Structure

Exhibit 6.1.2-1
Local Transport, Local Switching and Carrier Common Line when Combined to Provide a Complete Switched Access Service

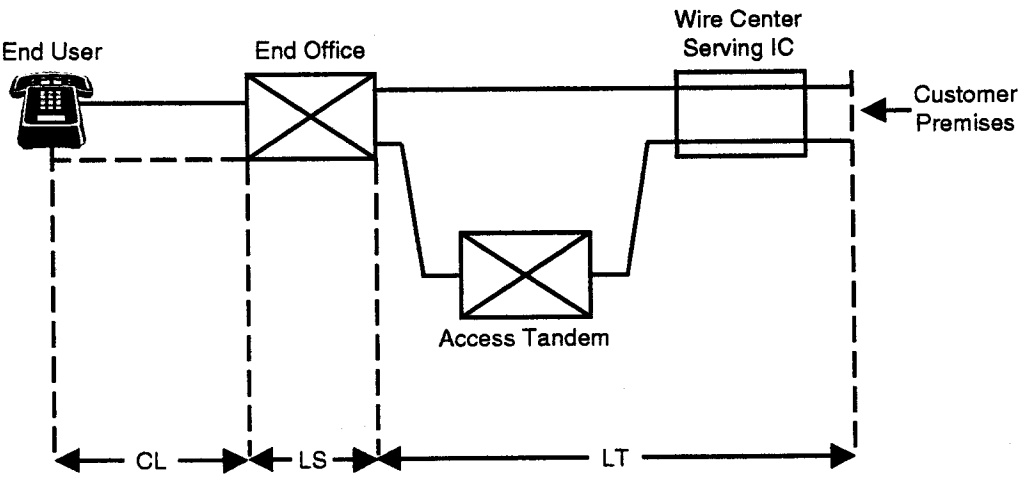

Local Transport (LT)

Local Switching (LS)

Common Line (CL)

6. Switched Access Service
6.1 General

6.1.3	Manner of Provision
A.	Regulations pertaining to the provision of switched access feature groups provided under this tariff are the same as those set forth in Bell Atlantic Telephone Companies Tariff FCC No. 11, Section 6.2, except for FG2A which is detailed in Section 6.3.2. In addition to those regulations, the following apply.
B.	At the request of the customer, the Telephone Company will provide to the customer the makeup of the facilities and services provided from the customer's premises to the first point of switching. This information will be provided in the form of a design layout report. The design layout report will be provided to the customer at no charge, and will be reissued or updated whenever these facilities are materially changed.
C.	At no additional charge, the Telephone Company will, at the customer's request, cooperatively test, at the time of installation, the following parameters.
1.	Loss
2.	C Message Noise
3.	3 Tone Slope
4.	dc Continuity
5.	Operational Signaling
6.	When the local transport is provided with interface groups 2, 6, 7 and 9 and the local transport termination is two wire (there is a four wire to two wire conversion in local transport), balance parameters (equal level echo path loss) may also be tested.
D.	When CCSA and/or the SS7 signaling option with FGD or FG2A is ordered, network compatibility and other operational tests will be performed cooperatively by the Telephone Company and the customer. These tests will verify the capabilities as set forth in TR-TSV-000905 and, in addition for FG2A, as set forth in GR-1434-CORE and TR-NPL-000145.
E.	Any customer may request that the facilities used to provide switched access service be specially routed as set forth in Section 11.

6. Switched Access Service
6.2 Rate Categories

6.2.1	Local Transport
A.	Local transport provides the transmission facilities between the customer's premises and the end office switch(es) where the customer's traffic is switched to originate or terminate its communications.
B.	Local transport is a two way voice frequency transmission path composed of facilities specified by the customer or, for tandem switched transport, determined by the Telephone Company.
1.	The two way voice frequency transmission path permits the transport of calls in the originating direction (from the end user end office switch to the customer's premises) and in the terminating direction (from the customer's premises to the end office switch), but not simultaneously.
2.	The voice frequency transmission path may be comprised of any form or configuration of plant capable of and typically used in the telecommunications industry for the transmission of voice and associated telephone signals within the frequency bandwidth of approximately 300 to 3000 Hz.
3.	The circuits and equipment used for local transport may be dedicated to a single customer (direct trunked transport), used in common by multiple customers (tandem switched transport) or a combination of the two.
4.	The customer has the option of a 2-wire voice grade, 4-wire voice grade, DS1 or DS3 entrance facility for local transport from the customer designated premises to the serving wire center of such customer designated premises. For collocation, the customer has the option of a DS1 or DS3 entrance facility for local transport from the customer's collocated premises to the serving wire center of such collocated premises.
5.	The customer has the option of voice grade, DS1 or DS3 direct trunked transport from the customer's serving wire center to designated end offices or access tandems.
6.	The local transport rate category provides for DS3 to DS1 or DS1 to voice grade multiplexing optional features.
7.	At the customer's option, multiplexing functions may be performed at the serving wire center of the customer premises, at a terminus, intermediate or super intermediate hub, at end offices or at Telephone Company access tandems. Channel mileage rates and a mid-link NRC will apply if multiplexing functions are performed between two Telephone Company hubs located in different wire centers.
8.	DS1 to voice grade multiplexing is not available at end offices.
C.	The Telephone Company will work cooperatively with the customer in determining the following.
1.	Whether the service is to be directly routed to an end office switch or through an access tandem switch.
2.	Whether the service is to be routed through a traffic operator position system tandem switch.

6. Switched Access Service
6.2 Rate Categories

6.2.1	Local Transport
C.	(Continued)
3.	The directionality of the service.
D.	The local transport mileage for access minutes which originate (i.e., FGD) from or terminate (i.e., FGB and FGD) to a WAL service will be calculated on an airline basis, using the V&H coordinates method as set forth in NECA Tariff FCC No. 4 for wire center interconnection information, between the WSO at which the WAL service terminates and the customer premises serving wire center for the FGB or FGD service provided.
1.	For purposes of determining local transport mileage, distance will be measured from the wire center that normally serves the customer to the end office switch(es). Exceptions to the mileage measurement rules are set forth in Section 6.4.5.
2.	When FGB usage originating from or terminating to a WAL service is transported over a FGB trunk for which assumed minutes of use are billed, the local transport mileage for such usage will be calculated in accordance with the V&H coordinates method.
E.	The local transport rate category is comprised of the following.
1.	**Entrance Facility**—Comprised of a standard channel termination rate for that portion of the voice frequency transmission path from the customer premises to the serving wire center of the customer premises.
a.	The customer must order or have in place an entrance facility from the customer premises to the serving wire center of the customer premises for direct trunked transport or tandem switched transport.
b.	An office channel termination rate will apply in lieu of the standard channel termination for each local transport entrance facility terminated at a customer's collocated premises as referenced in Bell Atlantic Telephone Companies Tariff FCC No. 11. Telephone Company facilities or services will not be provided to connect collocated premises in different serving wire centers.
2.	**Interconnection Charge**—Provides for interconnection with the Telephone Company switched access network.
F.	**Direct Trunked Transport**—The local transport rate category, when provided as direct trunked transport, is comprised of a channel mileage rate which provides for that portion of the voice frequency transmission path from the serving wire center of the customer premises directly to an end office or an access tandem.

6. Switched Access Service
6.2 Rate Categories

6.2.1	Local Transport
G.	The local transport rate category, when provide as tandem switched transport, is comprised of the following.
1.	**Local Transport Termination**—Provides for that portion of the voice frequency transmission path at either the serving wire center of the customer premises or at the access tandem and the end office switch for traffic that is switched at an access tandem. Local transport termination provides for that portion of the voice frequency transmission path at a host end office and an RSS or an RSM.
2.	**Local Transport Facility**—Provides for that portion of the voice frequency transmission path from either the serving wire center of the customer premises or the access tandem to an end office for traffic that is switched at an access tandem. Local transport facility provides for that portion of the voice frequency transmission path from the host end office to an RSS and an RSM.
3.	**Local Transport Tandem Switching**—Provides for the use of the Telephone Company tandem switching facilities. An operator passthrough charge and multiplexer charge will apply as appropriate.
H.	The Telephone Company will provide end users with access to the operators of a customer for operator assisted call completion as desired. If the customer provides operator services for its end users for calls originating from within the LATA and is capable of receiving calls passed through to it in the LATA by the Telephone Company, the customer will be assessed an operator passthrough charge that will include the costs associated with handling the operator services traffic.
I.	CCSA provides for interconnection to the Telephone Company common channel signaling network using dedicated STP links and STP ports.
J.	**Interface Groups**—Descriptions as well as regulations pertaining to interface groups which are applicable to the switched access feature groups, with the exception of FG2A, offered under this tariff are the same as those set forth in Bell Atlantic Telephone Companies Tariff FCC No. 11. FG2A is provided with interface groups as detailed in Exhibits 6.2.1-1 through 6.2.1-4.
K.	**Non-Chargeable Optional Features**—Where transmission facilities and/or parameters permit, and where signaling conversion is required by the customer to meet its signaling capability, the Telephone Company will provide the customer supervisory signaling arrangement for each transmission path, or other optional features, as follows.
1.	**Interface Groups 1 and 2**—DX supervisory signaling, E&M Type 1 supervisory signaling, E&M Type 2 supervisory signaling, or E&M Type 3 supervisory signaling.
2.	**Interface Group 2**—SF supervisory signaling or tandem supervisory signaling.

6. Switched Access Service
6.2 Rate Categories

6.2.1 Local Transport

K. (Continued)

3. **Interface Groups 6, 7 and 9**—These interface groups, at the option of the customer, may be provided with individual transmission path SF supervisory signaling where such signaling is available in Telephone Company central offices. Generally such signaling is available only where the entry switch provides an analog, (i.e., non digital), interface to the transport termination and a portion of the facility between the analog entry switch and the customer's premises is analog.

4. **Customer Specified Entry Switch Receive Level**—Allows the customer to specify the receive transmission level at the first point of switching. The range of transmission levels which may be specified is described in TR-NWT-000334. This is available with interface groups 2, 6, 7 and 9 for FGA and FGB.

5. **Customer Specification of Local Transport Termination**—Allows the customer to specify, for FGB routed directly to an end office or access tandem, a four wire termination of the local transport at the entry switch in lieu of a Telephone Company selected two wire termination. This is available only when the FGB arrangement is provided with Type B transmission specifications.

6. **SS7 Signaling**—Provided with FGD or FG2A. These trunks may be provided using interface groups 1, 2, 6 and 9. Premises interface codes 04DS9-1S, 04DS9-15 and 04DS6-44 are available for signaling connections as a function of CCSA level (DS1) of digital transmission.

a. The SS7 option allows the customer to receive signals for call setup out of band. This option is available with FGD or FG2A. The option is provided with calling party number, charge number, and carrier selection parameter. In addition, carrier identification parameter is available as a chargeable optional feature.

L. **Chargeable Optional Features**

1. CCSA provides interconnection to the Telephone Company common channel signaling network using a dedicated STP link and a dedicated STP port. The STP link provides the connection from the customer designated premises to the Telephone Company STP. The STP port provides the customer access to the Telephone Company SS7 network. The STP links and the STP port are dedicated to the customer.

a. Each CCSA STP link provides for two-way digital transmission at a speed of 56 kbps. The connection to the Telephone Company STP can be made from either the customer's SP which requires two 56 kbps circuits or from the customer's STP which requires four 56 kbps circuits. The design requirements for CCSA STP links are described in TR-TSV-000905.

b. The STP locations are set forth in NECA Tariff FCC No. 4.

6. Switched Access Service
6.2 Rate Categories

6.2.1	Local Transport
L. 1.	(Continued)
c.	Where multiple STP pairs are deployed in a LATA, Telephone Company end offices or tandems are interconnected to only one STP pair. The customer must route terminating traffic to the STP pair that serves the end office or tandem switch where the call is terminated. The customer may request that all of its terminating traffic in a LATA be routed to a single STP pair, using the Telephone Company's SS7 signaling network to provide the connection to the other STP pair in the LATA. If available capacity exists within the Telephone Company SS7 signaling network and where technically feasible, the Telephone Company and the customer will mutually agree to the customer's use of a single STP pair in the LATA. In the event that the Telephone Company SS7 signaling network may be impaired as a result of changes in traffic requirements, the customer will then be notified that its use of a single STP pair in the LATA is no longer permitted and that it must order CCSA links to each STP pair in the LATA.

6. Switched Access Service
6.2 Rate Categories

6.2.1 Local Transport

Exhibit 6.2.1-1
Premises Interface Codes--Interface Group 1 (USOC TTP1X)

Telephone Company Switch Supervisory Signaling				Premises Interface Code	Feature Group			
CCS				2N02			2A	

6. Switched Access Service
6.2 Rate Categories

6.2.1 Local Transport

Exhibit 6.2.1-2
Premises Interface Codes–Interface Group 2 (USOC TTP2X)

Telephone Company Switch Supervisory Signaling				Premises Interface Code	Feature Group			
	EA	EB	EC	4SF2			2A	
	EA	EB	EC	4SF3			2A	
	EA	EB	EC	4DX2			2A	
CCS				4N02			2A	

6. Switched Access Service
6.2 Rate Categories

6.2.1 Local Transport

Exhibit 6.2.1-3
Premises Interface Codes–Interface Group 6 (USOC TTP6X)

Telephone Company Switch Supervisory Signaling				Premises Interface Code	Feature Group			
	EA	EB	EC	4DS9–15			2A	
CCS				4DS9–15			2A	
CCS				4DS9–15B			2A	
CCS				4DS9–1S			2A	
CCS				4DS9–15K			2A	
CCS				4DS9–15S			2A	

6. Switched Access Service
6.2 Rate Categories

6.2.1 Local Transport

Exhibit 6.2.1-4
Premises Interface Codes–Interface Group 9 (USOC TTP9X)

Telephone Company Switch Supervisory Signaling				Premises Interface Code	Feature Group			
CCS				4DS6-44			2A	

6. Switched Access Service
6.2 Rate Categories

6.2.2	Local Switching
A.	Local switching provides for the use of common lines and the local end office switching and end user termination functions necessary to complete the transmission of switched access communications to the end users served by the local end office. The local switching functions are as follows.
1.	**Local Access** provides for the use of end office switching equipment. Following are the two local access functions.
a.	**Common Switching** provides the local end office switching functions associated with the various feature group switching arrangements. The common switching arrangements provide for originating, terminating or two way FGA, FGB, and FGD. Included as part of common switching are optional features which the customer can order to meet the customer's specific communications requirements.
b.	**Transport Termination** provides for the line or trunkside arrangements which terminate the local transport facilities. Included as part of transport termination are various nonchargeable optional termination arrangements. The number of transport terminations provided will be determined by the Telephone Company as set forth in Bell Atlantic Telephone Companies Tariff FCC No. 11, Section 6.5.6.
2.	**Line Termination** provides the terminations for the end user lines terminating in the local end office.
3.	**Intercept** provides for the termination of a call at a Telephone Company intercept operator or recording. The operator or recording tells a caller why a call, as dialed, could not be completed, and if possible, provides the correct number.

6.2.3	Local Switching Optional Features
A.	Optional Features as described herein are available in lieu of, or in addition to the features provided with the feature groups. Optional features are provided as common switching, transport termination or WAL service terminations.
B.	**Alternate Traffic Routing–End Office Alternate Routing When Ordered in Trunks**—A common switching feature that provides an alternate routing arrangement for customers who order in trunks and have access for a particular feature group to an end office via two routes: one route via an access tandem and one direct route. The feature allows the customer's originating traffic from the end office to be offered first to the direct trunk group and then overflow to the access tandem group. It is provided in suitably equipped end offices and is available as a nonchargeable option with FGB and FGD.

6. Switched Access Service
6.2 Rate Categories

6.2.3	Local Switching Optional Features
C.	**Alternate Traffic Routing–Multiple Customer Premises**—A common switching feature that provides the capability of directing originating traffic from an end office (or appropriately equipped access tandem) to a trunk group (the high usage group) to a customer designated premises until that group is fully loaded, and then delivering additional originating traffic (the overflowing traffic) from the same end office or access tandem to a different trunk group (the final group) to a second customer designated premises. The customer shall specify the last trunk CCS desired for the high usage group. It is provided in suitably equipped end office or access tandem switches and is available as a nonchargeable option with FGB and FGD.
D.	**ANI**—A common switching feature that provides the automatic transmission of a seven or ten digit number and information digits to the customer's premises for calls originating in the LATA, to identify the calling station. The ANI feature is an end office software function which is associated on a call by call basis with all individual transmission paths in a trunk group routed directly between an end office and a customer's premises, or where technically feasible, with all individual transmission paths in a trunk group between an end office and an access tandem, and a trunk group between an access tandem and a customer's premises.
1.	Where ANI cannot be provided, (e.g., on calls from four and eight party services), information digits will be provided to the customer.
2.	The seven digit ANI telephone number is available with FGB. With this feature group, technical limitations may exist in Telephone Company switching facilities which require ANI to be provided only on a directly trunked basis. ANI will be transmitted on all calls except those originating from multiparty lines and public telephone service lines using FGB or when an ANI failure has occurred.
3.	The ten digit ANI telephone number is only available with FGD with multifrequency address signaling. The ten digit ANI telephone number consists of the NPA plus the seven digit ANI telephone number. The ten digit ANI telephone number will be transmitted on all calls except those identified as multi-party line or ANI failure, in which case only the NPA will be transmitted (in addition to the information digit described below). The information digits identify the following information.
a.	Telephone number is the station billing number–no special treatment required
b.	Multiparty line–telephone number is a four or eight party line and cannot be identified–number must be obtained via an operator or in some other manner
c.	ANI failure has occurred in the end office switch which prevents identification of calling telephone number–must be obtained by operator or in some other manner
d.	Hotel/motel originated call which requires room number identification
e.	Coinless station, hospital, inmate, etc. call which requires special screening or handling by the customer
f.	Call is an Automatic Identified Outward Dialed (AIOD) call from customer premises equipment.

6. Switched Access Service
6.2 Rate Categories

6.2.3	Local Switching Optional Features
D.	(Continued)
4.	The ANI telephone number is the listed telephone number of the customer and is not the telephone number of the calling party. These ANI information digits are available with FGB and FGD.
5.	The following additional ANI information digits are available with FGD only and will be transmitted as agreed to by the customer and the Telephone Company.
a.	InterLATA restricted telephone number is identified line
b.	InterLATA restricted hotel/motel line
c.	InterLATA restricted coinless, hospital, inmate, etc., line.
6.	ANI is provided as a nonchargeable option with FGB and FGD.
7.	When the SS7 signaling option is specified, the customer will be provided an ANI equivalent, the charge number feature.
E.	**Band Advance Arrangement for Use With WAL Service**—A common switching feature that provided in association with two or more WAL service groups, provides for the automatic overflow of terminating calls to a WAL service group, when that group has exceeded its call capacity, to another WAL service group with a band designation equal to or greater than that of the overflowing WAL service group. This arrangement does not provide for call overflow from a group with a higher band designation to one with a lower one. This option is available as a nonchargeable option with FGD.
F.	**Call Denial on Line or Hunt Group**—A common switching feature that allows for the screening of terminating calls within the LATA, and for the completion only of calls to 411, 911, 800, 555-1212 and a Telephone Company specified set of NXXs within the Telephone Company local exchange calling area of the dial tone office in which the arrangement is provided. All other toll calls are routed to a reorder tone or recorded announcement. This feature is provided in all Telephone Company end offices. It is available with FGA.
G.	**Calling Party Number**—An SS7 signaling option that provides for the automatic transmission of the calling party's ten digit telephone number to the customer's premises for calls originating in the LATA or from the customer's premises for calls terminating in the LATA. The ten digit telephone number consists of the NPA plus the seven digit telephone number, which may or may not be the same number as the calling station's charge number. This feature is provided with FGD and FG2A when ordered with the SS7 signaling option. The specific protocols are contained in TR-TSV-000905.

6. Switched Access Service
6.2 Rate Categories

6.2.3	Local Switching Optional Features
H.	**Carrier Identification Parameter**—An SS7 signaling option that provides for the transmission of CIC information to customers on originating FGD service. CIP is available from suitably equipped end offices and access tandems, when the SS7 signaling option is specified. When CIP is provided, the switch will transmit, to the customer premises, the 3 or 4 digit CIC of the presubscribed line, or the CIC selected when the end user places a call using 10XXX or 101XXXX dialing. CIP is available on an originating basis as a chargeable optional feature with originating or two-way FGD trunk groups.
I.	**Carrier Selection Parameter**—An SS7 signaling option that provides for the automatic transmission of a signaling indicator which signifies to the customer whether the call being processed originated from a presubscribed end user of that customer. This feature is provided with FGD and FG2A when ordered with the SS7 signaling option.
J.	**Charge Number**—An SS7 signaling option that provides for the automatic transmission of the ten digit billing number of the calling station number and originating line information. This feature is provided with FGD and FG2A when ordered with the SS7 signaling option. The specific protocols are contained in TR-TSV-000905. The information digits shall only be used for billing and collection, routing screening, and completion of the originating subscriber's call or transaction or for services directly related to the originating subscriber's call or transaction. The information provided shall not be reused or resold without first notifying the originating telephone subscriber and obtaining affirmative consent of the subscriber for reuse or resale. Unless the originating subscriber has given consent for the reuse or resale, any information provided shall not be used for any purpose other than those specified in Section 6.2.3V1 thru 6.2.3V4. The restrictions contained herein shall not prevent the subscriber to the CN feature from using information acquired from a CN feature, such as the telephone number and billing information or information derived from analysis of the characteristics of calls received through the CN feature, to offer a product or service that is directly related to the products or services previously purchased by a customer of the CN feature subscriber.
1.	Performing the services or transactions that are the subject of the originating subscriber's call
2.	Ensuring network performance security, and the effectiveness of call delivery
3.	Compiling, using and disclosing aggregate information
4.	Complying with applicable laws

6. Switched Access Service
6.2 Rate Categories

6.2.3	Local Switching Optional Features
K.	**End Office End User Line Service Screening for Use With WAL Service**—A common switching feature that provides the ability to verify that a customer has dialed a called party address (by screening the called NPA and/or NXX on the basis of geographical bands selected by the Telephone Company) which is in accordance with that end user's service agreement with the customer, (i.e., WATS). This option is provided in all Telephone Company end offices in which WAL service is provided. It is available as a nonchargeable option with FGD.
L.	**Hunt Group Arrangement**—A common switching feature that provides the ability to sequentially access one of two or more line side connections in the originating direction, when the access code of the line group is dialed. This feature is provided in all Telephone Company end offices. It is available with FGA. FGA services provided by multiple customers to the same end user may not be combined in a single hunt group unless the local transport facility mileage is the same for each customer (i.e., the distance between each customer's serving wire center and the first point of switching (dial tone office), to which the FGA services are ordered) is the same.
M.	**Hunt Group Arrangement for Use With WAL Service**—A common switching feature that provides the ability to sequentially access one of two or more WAL services (i.e. 800 service access lines) in the terminating direction, when the hunting number of the WAL service group is forwarded from the customer to the Telephone Company. This feature is provided in all Telephone Company end offices in which WAL service is provided. It is available as a nonchargeable option with FGB and FGD.
N.	**Nonhunting Number for Use With Hunt Group Arrangement or Uniform Call Distribution Arrangement for Use With WAL Service**—A common switching feature that provides an arrangement for an individual WAL service within a multiline hunt or uniform call distribution group that provides access to those WAL services within the hunt or uniform call distribution group when it is idle or provides busy tone when it is busy, when the nonhunting number is dialed. Where available, this feature is only provided in Telephone Company electronic end offices in which WAL service is provided. It is available as a nonchargeable option with FGB and FGD.
O.	**Nonhunting Number for Use With Hunt Group or Uniform Call Distribution Arrangement**—A common switching feature that provides an arrangement for an individual line within a multiline hunt or uniform call distribution group that provides access to that line within the hunt or uniform call distribution group when it is idle or provides busy tone when it is busy, when the nonhunting number is dialed. Where available, this feature is provided in Telephone Company electronic end offices only. It is available with FGA.

6. Switched Access Service
6.2 Rate Categories

6.2.3	Local Switching Optional Features
P.	**Operator Trunk Assist Feature**—A transport termination feature that provides the operator functions available in the end office to the customer's operator. These functions are operator released and operator attached. It is available with FGD and is provided as a trunk type of transport termination. This option is not available in combination with the SS7 signaling option.
Q.	**Operator Trunk Full Feature**—A transport termination feature that provides the operator functions available in the end office to the customer's operator for interLATA use. These functions are operator released, operator attached, coin collect, coin return and ringback. It is available with FGD and is provided as a trunk type of transport termination. This option is not available in combination with the SS7 signaling option.
R.	**Rotary Dial Station Signaling**—A transport termination feature that provides for the transmission of called party addresses signaling from rotary dial stations to the customer's premises for originating calls. This option is provided in the form of a specific type of transport termination. It is available as a nonchargeable option with FGB, only on a directly trunked basis.
S.	**Routing of IntraLATA Calls to the Telephone Company for Use With WAL Service**—A common switching feature that is available with either, originating only WAL service not equipped with the end office end user line service screening optional feature, or with two way WAL service, provides that intraLATA calls originating over such services by the end users dialing valid NXX codes in the LATA, time or weather announcement services of the Telephone Company, community information services of an information service provider, local operator assistance (0– and 0+), service codes (611, 911), and directory assistance (411, 555–1212 and NPA+555–1212) will be routed to the facilities of the Telephone Company for completion. Calls placed by the end user's dialing the 950–0XXX or 950–1XXX will be directed to the FGB customer. Additionally, this option provides that interLATA calls originating from such services by the end user's dialing 0– will be directed to the FGD switched access service of the customer providing the interLATA operator services. This option is available as a nonchargeable option with FGD.
T.	**Service Class Routing**—A common switching feature that provides the capability of directing originating traffic from an end office to a trunk group to a customer designated premises, based on the line class of service (e.g., coin, multiparty or hotel/motel), service prefix indicator (e.g., 0– or 0+) or service access code (e.g., 800). It is provided in suitably equipped end office or access tandem switches and is available as a nonchargeable option with FGD.
U.	**Service Code Denial on Line or Hunt Group**—A common switching feature that allows for the screening of terminating calls within the LATA, and for disallowing completion of calls to 0– and N11. This feature, where available, is provided in all Telephone Company end offices. It is available with FGA.

6. Switched Access Service
6.2 Rate Categories

6.2.3	Local Switching Optional Features
V.	**Uniform Call Distribution Arrangement**—A common switching feature that provides a type of multiline hunting arrangement which provides for an even distribution of calls among the available lines in a hunt group. Where available, this feature is provided in Telephone Company electronic end offices only. It is available with FGA.
W.	**Uniform Call Distribution Arrangement for Use With WAL Service**—A common switching feature that provides a type of multiline hunting arrangement which provides for an even distribution of terminating calls among the available WAL services in the hunt group. Where available, this feature is only provided in Telephone Company electronic end offices in which WAL service is provided. It is available as a nonchargeable option with FGB and FGD.
X.	**Up to Seven Digit Outpulsing of Access Digits To Customer**—A common switching feature that provides for the end office capability of providing up to seven digits of the uniform access code (950-0XXX or 950-1XXX) to the customer premises. The customer can request that only some of the digits in the access code be forwarded. The access code digits would be provided to the customer's premises using multifrequency signaling, and transmission of the digits would precede the forwarding of ANI if that feature were provided. It is available as a nonchargeable option with FGB.
Y.	**WAL Service Terminations**—Available only in end offices designated as WSOs.
1.	**E&M Supervisory Signaling** provides for E&M Type 1, Type 2 or Type 3 supervisory signaling. When E&M supervisory signaling is provided, answer supervision is also provided for originating traffic. This option is available with four wire originating, terminating and two way only WAL service, for use with FGB and FGD.
2.	**Answer Supervision** provides for equipment at the end user premises that indicates that the called end user has answered, when such indication is provided by the IC. When answer supervision is provided with two wire WAL service, reverse battery type supervisory signaling is also provided. This option is available with originating only two wire WAL service for use with FGB and FGD.

6. Switched Access Service
6.3 Description of Switched Access Services

6.3.1	General
A.	Descriptions of the switched access feature groups provided under this tariff are the same as those described in Bell Atlantic Telephone Companies Tariff FCC No. 11, Section 6.3. In addition, a WAL service when ordered from Bell Atlantic Telephone Companies Tariff FCC No. 11, Section 7 may at the option of the customer be provided for use with FGB and FGD.

6.3.2	Feature Group 2A (FG2A)	
A.	FG2A is available to wireless carriers exclusively, and provides trunk side access to Telephone Company end office switches and local service providers end office switches with an associated seven or ten digit access code for the wireless carrier's use in originating and terminating intraLATA communications.	
1.	FG2A is provided at appropriately equipped Telephone Company designated electronic access tandems.	
2.	For FG2A with the SS7 signaling option, the CCSA signaling connection is provided to Telephone Company designated STPs.	
B.	FG2A may have access to a trunk group or groups at an access tandem switch, designated by the Telephone Company, where switching is provided.	
C.	**Billing Options**— The following billing option is available to the FG2A wireless carrier(s).	(C)
1.	Charges are billed to the FG2A wireless carrier and end user.	
a.	For calls in the terminating direction, the wireless carrier will be billed all terminating access charges in accordance with the tariff.	
b.	For calls in the originating direction, the end user will be billed applicable local or MTS usage charges from NHPUC No. 83.	(D)
		(D)

6. Switched Access Service
6.3 Description of Switched Access Services

6.3.2	Feature Group 2A (FG2A)
D.	**Terminating Access**—FG2A switching, when used in the terminating direction, may be used to access valid NXXs in the LATA served by the end offices subtending the access tandems. Calls in the terminating direction will not be completed to local operator service (0– and 0+), directory assistance service, 911 emergency reporting service, exchange telephone repair, time or weather announcement services, 800 database and 900 services and community information services of an information service provider.
1.	FG2A may not be switched in the terminating direction to switched access FGB.
2.	FG2A intraLATA usage will not be switched by the Telephone Company in the terminating direction to FGD.
E.	**Originating Access**—At the option of the wireless carrier, a group of seven digit numbers assigned by the Telephone Company is provided for LATA access to FG2A in the originating direction.
F.	**Signaling**—FG2A provides trunk side switching through the use of access tandem switch trunk equipment. The switch trunk equipment is provided with multifrequency address signaling. FG2A may be provided, at the customer's option, with multifrequency address signaling in both the originating and terminating directions as specified in technical reference TR–NPL–000145 or common channel signaling utilizing the SS7 protocol.
1.	With common channel signaling, up to 12 digits of the called party number dialed by the customer's end user using dual tone multifrequency or dial pulse address signals will be provided by Telephone Company equipment to the customer's designated premises via a CCSA connection. The SS7 signaling option requires the customer to order CCSA links (refer to Section 6.2.1).
G.	**Intercept Announcement**—When all FG2A switching arrangements are discontinued in a LATA, an intercept announcement is provided for a limited period of time. This arrangement provides an announcement that the service associated with the numbers dialed has been disconnected.

6.3.3	800 Data Base Access Service
A.	**General**—For purposes of administering the rules and regulations set forth in this tariff regarding the provisions of 800 database access service, except where otherwise specified, the term 800 database access service shall include any of the following NPAs as they become available to the industry.
1.	800
2.	822
3.	833
4.	844

6. Switched Access Service
6.3 Description of Switched Access Services

6.3.3	800 Data Base Access Service
A.	(Continued)
5.	855
6.	866
7.	877
8.	888
B.	800 database access service is a LATA-wide offering utilizing originating trunk side switched access service. The service provides for the forwarding of end user dialed 800+NXX-XXXX calls to a Telephone Company switching point which will initiate a query to the database to perform the carrier identification function. The customer has the option of having the dialed 800 number (i.e., 800-NXX-XXXX) or if the 800 to POTS number translation feature is specified, a translated ten digit POTS number (i.e., NPA-NXX-XXXX) is delivered to the customer premises switch capable of performing the carrier identification function. Based on the NXX, the call is forwarded to the appropriate IC.
1.	An 800 carrier identification charge (described in Section 6.6.2), applies to customers who obtain 800 database access service.
C.	No access code is required for 800 database access service. When a 1+800+NXX-XXXX call is originated by an end user, the Telephone Company will perform the carrier identification function based on the dialed digits to determine the IC location to which the call is to be routed. The carrier identification function will be available at suitably equipped end offices or access tandem switches. If the call originates from an end office switch not equipped to provide the carrier identification function, the call will be routed to the nearest office at which the function is available. Once carrier identification has been established, the call will be routed to the IC. Calls originating from an end office to which the IC has not ordered 800 database access service, will not be completed.
D.	The provision of 800 database access service requires direct access by the customer or other authorized party, to the 800 SMS.
E.	The manner in which 800 database access service is provisioned is dependent on the status of the end office from which the service is provided, and/or the status of the customer (i.e., MTS/WATS provider or MTS/WATS type provider). 800 database access service is provisioned as FGD.
1.	Unless prohibited by technical limitations (e.g., different dialing plans), the IC's 800 database access service traffic may, at the option of the IC, be combined in the same trunk group arrangement with the IC's non-800 access service traffic. When required by technical limitations, a separate trunk group must be established for 800 database access service.

6. Switched Access Service
6.3 Description of Switched Access Services

6.3.3	800 Data Base Access Service
F.	800 traffic carried over direct end office routed trunks is available only at end offices equipped with 800 access SSP functionality. 888 traffic carried over direct end office routed trunks is available only at end offices equipped with 888 access SSP functionality. All such traffic originating from end offices not equipped with the appropriate SSP function must be routed via an access tandem at which the function is available and the 800 access service must be ordered accordingly. SSP locations are identified in the NECA Tariff FCC No. 4.
G.	**Optional Features**
1.	**Call Handling and Destination Feature**—Allows the IC to create call processing logic for 800-NXX-XXXX dialed calls. In this manner the 800 database access service can be customized to meet individual requirements. The feature may be used in combination with one or more routing options based upon IC specification and technical switch limitations. The IC may segment the 800 calls based on the following options to choose different terminating destinations and/or multiple carriers.
a.	NPA/NXX or specific telephone number of the calling party based on the ANI associated with the call or based on the specific telephone number of the calling party (the availability this feature is subject to the Telephone Company's ability to obtain full ten digit ANI of the calling party).
b.	Time of Day
c.	Day of Week
d.	Specific days of the year (e.g., December 25)
e.	Percentage of traffic (in 1% increments)
f.	**800 to POTS Translation** which allows ICs to designate a ten digit POTS telephone number to be translated from a specific 800 number to be delivered to the ICs premises. If the POTS number translation feature is ordered, the IC will be unable to determine that such calls originated as 800 dialed calls unless the IC also orders the ANI optional feature.

6. Switched Access Service
6.4 Responsibility of the Telephone Company

6.4.1	General
A.	In addition to the obligations in Section 2, the Telephone Company has certain other obligations pertaining only to the provision of switched access service. Those regulations are the same as those set forth in Bell Atlantic Telephone Companies Tariff FCC No. 11, Section 6.5.

6.4.2	Transmission Specifications
A.	The available transmission specifications for switched access service arrangements offered under this tariff are the same as those stated in Bell Atlantic Telephone Companies Tariff FCC No. 11, Section 6.4.
B.	Data transmission parameters are not provided with FG2A.
C.	The transmission specifications for FG2A are in TR-EOP-000352.
D.	Transmission specifications for CCSA signaling connections are set forth in TR-TSV-000905.
E.	FG2A is provided with Type B transmission specification only. Type B is provided with interface group 2.

6.4.3	Excessive Trunk Group Blocking
A.	Regulations for network blocking for FGD are the same as those set forth in Bell Atlantic Telephone Companies Tariff FCC No. 11, Section 6.7.7.

6.4.4	Measuring Access Minutes
A.	Regulations for measuring access minutes for originating, terminating or two way FGA, FGB, FGD and FG2A are the same as those set forth in Bell Atlantic Telephone Companies Tariff FCC No. 11, Section 6.7.6 except as detailed in Section 6.4.4B.
B.	**Feature Group 2A Usage Measurement**
1.	For originating calls over FG2A, except for FG2A with the SS7 signaling option, usage measurement begins when the originating FG2A entry switch receives answer supervision from the customer's point of termination, indicating the called party has answered.
2.	The measurement of originating call usage over FG2A ends when the originating FG2A entry switch receives disconnect supervision from either the originating end user's end office, indicating the originating end user has disconnected or the customer's point of termination, whichever is recognized first by the entry switch.
3.	For terminating calls over FG2A, the measurement of access minutes begins when the terminating FG2A entry switch receives answer supervision from the terminating end user's end office, indicating the terminating end user has answered.

6. Switched Access Service
6.4 Responsibility of the Telephone Company

6.4.4	Measuring Access Minutes
B.	(Continued)
4.	The measurement of terminating call usage over FG2A ends when the terminating FG2A entry switch receives disconnect supervision from either the terminating end user's end office, indicating the terminating end user has disconnected, or the customer's point of termination, whichever is recognized first by the entry switch.
5.	For originating calls over FGD with the SS7 signaling option, usage measurement for direct trunks begins when the FGD entry switch sends an initial address message. For originating calls over FGD or FG2A with the SS7 signaling option, usage measurement for tandem trunks begins when the FGD or FG2A entry switch receives an exit message.

6.4.5	Determining Local Transport Facility Mileage
A.	Regulations pertaining to mileage measurement and exceptions to the mileage measurement rules are the same as those set forth in Bell Atlantic Telephone Companies Tariff FCC No. 11, Section 6.7.11.

6.4.6	Determination of Number of Transmission Paths
A.	Regulations pertaining to determination of number of transmission paths are the same as those set forth in Bell Atlantic Telephone Companies Tariff FCC No. 11, Section 6.6.2.

6. Switched Access Service
6.5 Responsibility of The Customer

6.5.1 General

A. In addition to the customer obligations set forth in Section 2, the customer has certain specific obligations pertaining to the use of the switched access service arrangements offered under this tariff as follows.

6.5.2 Facility Requirements

A. When ordering switched access service, the customer must, at a minimum, specify the local transport entrance facility, either existing or new, to be used and whether direct trunked transport or tandem switched transport is to be furnished. When direct trunked transport is to be furnished, the customer must also specify the direct trunked transport to be used, either existing or new.

6.5.3 Report Requirements

A. Customers are responsible for providing the following reports or notification to the Telephone Company, when applicable.

1. **Jurisdictional Reports**—Refer to Section 2.5.10.
2. **Usage Data–Meet Point Billing**—Refer to Section 3.1.1A.
3. **Code Screening Reports**—When a customer orders service class routing it will report the number of trunks and/or the appropriate codes to be instituted in each end office or access tandem switch, for each of the arrangements ordered.
4. **Trunk Group Measurement Reports**—With the agreement of the customer, trunk group data in the form of usage in CCS, peg count and overflow for its end of all access trunk groups, where technologically feasible, will be made available to the Telephone Company. These data will be used to monitor trunk group utilization and service performance and will be based on previously arranged intervals and format.

6.5.4 Supervisory Signaling

A. The customer's facilities will provide the necessary on hook, off hook, answer and disconnect supervision.

6.5.5 Design of Switched Access Services

A. When a customer orders switched access service on a per trunk basis, the customer will take reasonable steps to assure that sufficient access services have been ordered to handle its traffic.

6. Switched Access Service
6.6 Rate Regulations

6.6.1	General
A.	The types of rates and charges that apply to switched access service are monthly rates, usage rates and NRCs.
B.	Rates and charges for switched access service provided under this tariff apply to originating, terminating and two way FGB, FGD, FG2A and 800 database access service.

6.6.2	Monthly Rates
A.	Monthly rates are flat recurring rates that apply each month or fraction thereof that an entrance facility, a direct trunked transport switched access service, chargeable optional feature or specific rate elements are provided. For billing purposes, each month is considered to have 30 days.

6.6.3	Usage Rates
A.	Usage rates apply only when a specific rate element is used. They are applied on a per access minute basis or a per call basis. Usage rates are accumulated over a monthly period. Usage rates applied on a per access minute basis are applied differently to the various rate elements as set forth in Section 6.6.2.

6.6.4	Nonrecurring Charges
A.	NRCs are one time charges that apply for a specific work activity (i.e., installation or change to an existing service). The types of NRCs that apply for switched access service are as described herein.
B.	**Installation of Service**—Local transport and local switching NRCs apply to each switched access service installed.
1.	**Switched Access Service Ordered on a Per Line or Trunk Basis**—The local switching NRC is applied per line or trunk.
2.	**Switched Access Service Ordered on a BHMC Basis**—The local switching NRC is also applied on a per trunk basis but the charge applies only when the capacity ordered requires the installation of an additional trunk(s).
3.	**CCSA STP Links**—The NRC is applied per link connection.
4.	NRCs will apply for the initial installation of entrance facility and, if applicable, the initial installation of channel mileage mid-link and mulitiplexer. For each entrance facility of the same type (i.e. voice grade, DS1, DS3) ordered at the same time, for the same date and from the same customer premises to the same serving wire center, the channel termination NRC will apply on a first and additional basis.

6. Switched Access Service
6.6 Rate Regulations

6.6.4	Nonrecurring Charges
C.	**Installation of Optional Features or BSEs**—If a separate NRC applies for the installation of an optional feature, the charge applies whether the feature is installed coincident with the initial installation of service or at any time subsequent to the initial installation of service. For optional features without separate NRCs, the local switching NRC will apply when the optional features are ordered subsequent to the installation.
D.	**Service Rearrangements**—Changes to existing services (installed) which do not result in either a change in the minimum period requirements as set forth in Section 2.2.5 or a change in the physical location of the POT at the customer's premises or the customer's end user's premises are considered service rearrangements. Service rearrangements which are considered to result in a change in the minimum service period are as set forth in Bell Atlantic Telephone Companies Tariff FCC No. 11, Section 5. Changes which result in the establishment of new minimum period obligations are treated as discontinuances of existing service, and installations of new service. Changes in the physical location of the POT are treated as moves. The charge to the customer for the service rearrangement is dependent on whether the change is administrative only or involved an actual physical change to the service.
1.	The following administrative changes will be made without charge to the customer.
a.	Change of customer name
b.	Change of customer or customer's end user premises address when the change of address is not a result of a physical relocation of equipment
c.	Change in billing data [name, address or contact name or telephone number]
d.	Change of agency authorization
e.	Change of customer circuit identification
f.	Change of billing account number
g.	Change of customer test line number
h.	Change of customer or customer's end user contact name or telephone number
i.	Change of jurisdiction
j.	Change in billing option within the same access tandem from tandem switched transport to direct trunked transport or vice versa.
2.	If, due to network considerations of the Telephone Company, it was impossible to combine 800 database access services traffic with a customer's other trunkside switched access services, no charge shall be applied to combine the trunk groups when it becomes possible.

6. Switched Access Service
6.6 Rate Regulations

6.6.4	Nonrecurring Charges
D.	(Continued)
3.	To redirect traffic from direct routed to tandem routed for 800 database service, where the service is initially available only at the tandem will not be assessed an NRC. In addition, when 800 database service becomes available at end offices subtending a tandem to which customers have redirected their 800 traffic, customers will be allowed to rearrange their 800 traffic from tandem routed to direct routed at no charge provided the same customer premises is maintained.
E.	**Trunk Rearrangements and Rearrangements of Switched Access Services onto an Existing Switched Access DS3 or DS1 Facility**—The regulations contained in Section 6.6.4E will apply for six months from August 30, 1996 for rerouting of trunks from end office to access tandem or from access tandem to end office. In addition, customers who wish to rearrange switched access services from one switched access facility onto a different existing or new switched access facility will be subject to the following regulations. Installation of new switched access facilities for rearrangements will not be subject to an NRC. The Telephone Company guarantees to provide these rearrangements on orders due dated no later than six months from August 30, 1996. These regulations apply to switched access services only and will not include special access services provided on a shared use facility as set forth in Bell Atlantic Telephone Companies Tariff FCC No. 11.
1.	**Trunk Rearrangements**—If the change involves rearrangement of a customer's trunkside switched access service arrangement from direct routed to tandem routed, or from tandem routed to direct routed, a charge shall apply for the customer requested rearrangement, provided all the following conditions are met.
a.	The same customer premises is maintained.
b.	The direct routed end office must subtend the tandem which service is being rearranged to or from.
c.	The Telephone Company will work cooperatively with the customer to determine the equivalent basis for the trunk rearrangements based on industry accepted engineering standards.
d.	The orders to connect at the tandem or end office must be placed at the same time as the orders to disconnect from the end office or tandem. The due date for the disconnect may not be more than 90 days after the due date for the connect order.
2.	Rearrangements of a switched access services onto an existing switched access DS3 or DS1 facility will be subject to the rearrangement charge provided the same customer designated premises and end points of the underlying switched access services remain the same.
F.	**All Other Service Rearrangements** will be charged for as follows.
1.	If the change involves the addition of an optional feature which has a separate NRC, that NRC will apply.

6. Switched Access Service
6.6 Rate Regulations

6.6.4 Nonrecurring Charges

F. (Continued)

2. If the change involves rearrangement of a customer's FGD access service from direct routed to tandem routed, no charge shall apply for the customer requested rearrangement as long as the following conditions are met.

a. Tandem routed access was not available to the end office at the time the end office was converted to an equal access office.

b. The customer was providing service in the relevant area prior to the availability of tandem routed access.

c. The customer requested the rearrangement of its trunks from direct routed access to tandem routed access within six months of the first availability of tandem routed access in that area.

d. The customer orders, as tandem routed, the equivalent capacity to replace the direct routed trunks.

3. If the change involves the rearrangement of existing switched access services from a digital interface group to another capable of a higher bit rate), a digital-to-digital rearrangement charge will apply per interface group with the lower bit rate capability. The charge is the same as that set forth in Bell Atlantic Telephone Companies Tariff FCC No. 11. No charge applies to the individual switched services provided within the interface group unless the customer changes the service type or changes only a portion of the individual services from one interface group to another, in which case, the appropriate NRC for each change will apply.

4. For all other changes, including the addition of, or modifications to, optional features without separate NRCs the local switching NRC will apply. When an optional feature is not required on each transmission path, but rather on an entire transmission path group, an end office or an access tandem switch, only one such charge will apply (i.e., it will not apply per transmission path).

5. If the change involves a modification to FGD to include the initial provision of 800 database access service in addition to non 800 access service traffic, the local switching installation NRC will apply for service rearrangements on the existing trunks.

6. If the change involves the conversion of existing FGD or FG2A services with multi-frequency address signaling to FGD with the SS7 signaling option, a rearrangement charge will apply for the first trunk converted and an additional trunk rearrangement charge for each additional trunk ordered and converted at the same time.

7. If the change involves a change of point code on FGD or FG2A with the SS7 signaling option, a rearrangement charge will apply on a first and additional basis for all orders placed at the same time, between the same two points and for the same due date.

6. Switched Access Service
6.6 Rate Regulations

6.6.4	Nonrecurring Charges
G.	**Moves**
1.	A move involves a change in the physical location of one of the following.
a.	The POT at the customer's or the customer's end user's premises.
b.	The customer's premises.
2.	The charges for the move are dependent on whether the move is to a new location within the same building or to a different building.
a.	**Moves Within the Same Building**—When the move is to a new location within the same building, the charge for the move will be the local switching NRC for the capacity affected. There will be no change in the minimum period requirements.
b.	**Moves to a Different Building** will be treated as a discontinuance and start of service and all associated NRCs will apply. New minimum period requirements will also be established for the new service. The customer will also remain responsible for satisfying all outstanding minimum period charges for the discontinued service.
H.	**Upgrades**—When a customer upgrades a FGA or FGB service to a FGD service, the NRCs will not apply if the following conditions are met.
1.	The same customer premises is maintained.
2.	The orders for the disconnect of the FGA or FGB service and the start of the FGD service are placed with the Telephone Company at the same time.
3.	The customer requests the same effective date for both the disconnect of service and start of service orders.

6. Switched Access Service
6.7 Application of Rates and Charges

6.7.1	General
A.	Local transport termination, local transport facility, tandem switching, interconnection charge and local switching rates are applied to all minutes of use measured as specified in Section 6.4.4.
B.	As specified in the PUC's Order No. 20,077, switched access originating and/or terminating charges apply to all intrastate messages which make use of switched access subject to this tariff.

6.7.2	CCSA Rates
A.	CCSA rates are applied as detailed in Bell Atlantic Telephone Companies Tariff FCC No. 11, Section 6.1.3.

6.7.3	800 Database Access Service Carrier Identification Charge
A.	In addition to the rates and charges associated with the rate categories described in Section 6.2 which are applicable to all switched access service, the 800 database access service carrier identification charge, applies for the identification of the appropriate customer for 800 database access service. The charge is assessed to the IC on a per query basis.

6.7.4	Local Transport Rates
A.	Rate regulations for DS3 switched access entrance facilities are specified in Bell Atlantic Telephone Companies Tariff FCC No. 11, Section 6.7.1. For all other switched access entrance facilities, the rate applies on a recurring monthly basis for the capacity of the entrance facility (i.e., DS1, VG) ordered.
B.	The local transport termination rate is applied per minute of use.
C.	The local transport facility rate is applied per mile, per minute of use. When the local transport facility mileage is zero (i.e., the end office switch or WSO, as appropriate, and the customer's serving wire center are collocated), the local transport facility rate does not apply.
D.	The tandem switching rate is applied per minute of use.
E.	The interconnection charge is applied per minute of use.
F.	For direct trunked transport, the channel mileage applies on a fixed and per mile monthly basis. When the channel mileage is zero (i.e., the end office switch or WSO, as appropriate, and the customer's serving wire center are located in the same building) the channel mileage rates do not apply.

6. Switched Access Service
6.7 Application of Rates and Charges

6.7.4	Local Transport Rates
G.	When direct trunked transport is provided to an end office which is a host office, in addition to the appropriate channel mileage monthly rate, the customer will be billed the local transport termination rate on a per minute of use basis and the local transport facility rate on a per mile per minute basis for the transport of the call to of from a RSS or a RSM. The mileage for the local transport facility rate element will be measured from the host office to the RSS or RSM.
H.	For direct trunked transport provided to an access tandem, the channel mileage applies on a fixed and per mile basis between the serving wire center and access tandem. The per mile per minute local transport facility and the per minute local transport termination rates apply for the transport from the access tandem to the end office. The per minute tandem switching rate applies to all minutes of use switched at the access tandem.
I.	For tandem switched transport, the local transport termination rate, the tandem switching rate and the interconnection charge apply per access minute. The local transport facility rate applies per mile per access minute.
J.	When tandem switched transport is provided to an end office which is a host office, in addition to the rates set forth in Section 6.7.4E, the customer will be billed the local transport termination rate per minute of use and the local transport facility rate per mile per minute for the transport of the call to or from a RSS or RSM.
K.	For FGA services when the off-hook supervisory signaling is forwarded by the customer's equipment when the called party answers, the local transport termination rate per minute of use and the local transport facility rate per mile per minute will apply for the transport of the call from the dialtone office to the end office to which the traffic terminates or from which the traffic originates. The mileage for the local transport facility will be measured from the dialtone office to the end office.

7. Reserved for Future Use

8. Reserved for Future Use

9. Reserved for Future Use

10. Reserved for Future Use

11. Special Facilities Routing of Access Services
11.1 General

11.1.1	Description
A.	The services provided under this tariff are provided over such routes and facilities as the Telephone Company may elect. Special facilities routing is involved when, in order to comply with requirements specified by the customer, the Telephone Company provides switched access service in a manner which includes one or more of the following.
1.	**Diversity**—Two or more services must be provided over not more than two different physical routes.
2.	**Avoidance**—A service must be provided on a route which avoids specified geographic locations.
3.	**Cable Only Facilities**—Certain services are provided on cable only facilities to meet the particular needs of a customer. Service is provided subject to the availability of cable only facilities. In the event of service failure, restoration will be made through the use of any available facilities as selected by the Telephone Company.

11.1.2	Manner of Provision
A.	Avoidance, diversity and cable only facilities are available on switched access service (refer to Section 6).
B.	In order to avoid the compromise of special routing information, the Telephone Company will provide the required routing information for each specially routed service to only the ordering customer. If requested by the customer, this information will be provided when service is installed and prior to any subsequent changes in routing.
C.	The offering of special facilities routing of access services contemplates the use of existing facilities.

11.1.3	Application of Rates and Charges
A.	The rates and charges for special facilities routing of Access services set forth in Section 31 are in addition to all other rates and charges that may be applicable for services provided under other sections of this tariff. The rates and charges for administration and any other specific items of cost directly attributable to the provision of this service shall be filed in Section 31 of this tariff.

12. Reserved for Future Use

13. Additional Engineering, Labor and Miscellaneous Services
13.1 Regulations

13.1.1	General
A.	Regulations and charges for additional engineering, additional labor and miscellaneous services applicable to switched access services provided under the regulations and rates of this tariff are the same as those set forth in Bell Atlantic Telephone Companies Tariff FCC No. 11, Section 13, for originating, terminating or two way FGA, FGB and FGD, with the exception of those portions of Section 13 relating to customer notification, the equal access balloting process, the allocation process, and IC customer lists provisions for presubscription.

14. IntraLATA Presubscription (ILP) Services
14.1 IntraLATA Presubscription

14.1.1	Description
A.	ILP is an arrangement whereby an exchange service customer of the Telephone Company designates either the Telephone Company or another carrier as its presubscribed interexchange carrier (ILP PIC) for calls made from the customer's exchange access line, without the customer having to dial an access code. Calls which qualify for ILP are intrastate intraLATA toll calls as defined in NHPUC No. 83.

14. IntraLATA Presubscription (ILP) Services
14.2 Primary Interexchange Carrier (PIC) Verification

14.2.1	Description
A.	PIC verification enables an IC to obtain verification of their end user's PIC selection in a Telephone Company switch. The IC must provide the telephone number to the Telephone Company either verbally or by the PIC verification automated interface using appropriate system specifications as determined by the Telephone Company. PIC verification service will be provided from suitably equipped wire centers as specified in the NECA Tariff FCC No. 4.

14. IntraLATA Presubscription (ILP) Services
14.3 Application of Rates and Charges

14.3.1	IntraLATA Presubscription
A.	An ILP PIC NRC applies per change for each telephone exchange service line or trunk.
1.	For 90 days immediately following the date of implementation, customers may make one ILP PIC change without charge.
2.	The ILP PIC charge does not apply for new service customers selecting an ILP PIC at the time they place an order with the Telephone Company for telephone exchange service.
3.	A new customer who did not select an ILP PIC at the time service was being established and as a result was provided access code dialing as an alternative, has 60 days to request a change from access code dialing to the Telephone Company or to another carrier, and no ILP PIC charge will apply. Customers requesting a change after 60 days will incur the ILP PIC charge.
4.	The ILP PIC charge applies for an intralata PIC change on a line. The ILP PIC charge will be waived if an interlata PIC change is also being requested on that line at the same time, and on the same service order, as the intralata PIC change request.
B.	**Service Charges**—The applicable NHPUC No. 83 NRC (service order) applies to reestablish a customer's OCP service.
1.	The charge does not apply when the customer's request is received within 90 days of the date upon which the customer's ILP PIC is changed from the Telephone Company.
C.	**Unauthorized ILP PIC Change/Restoral**
1.	If a customer denies authorizing a change in ILP as submitted by an IC, the customer will be credited the previously billed ILP PIC NRC, and the ILP PIC NRC will be waived for restoring the customer to its previous ILP PIC.
2.	The ILP PIC NRC will be assessed, as applicable, to an IC as set forth following when a customer denies authorizing the change in ILP as submitted by the IC (refer to Section 14.3.1A4).
a.	One ILP PIC NRC is assessed to the alleged unauthorized IC to recover the disputed ILP PIC NRC previously billed to the customer.
b.	One ILP PIC NRC is assessed to the alleged unauthorized IC to restore the customer to its previous ILP PIC.
3.	In accordance with the FCCs slamming liability rules in CC Docket 94-129, if an alleged unauthorized IC is ultimately exonerated of liability, the IC is entitled to receive full payment from the customer for all services provided. In such situations, any ILP PIC NRC assessed against the IC by the Telephone Company is subject to rebilling to the customer by the alleged unauthorized IC.

14. IntraLATA Presubscription (ILP) Services
14.3 Application of Rates and Charges

14.3.2	PIC Verification Service
A.	A separate NRC will apply for each successful PIC verification made on either a verbal or automated interface basis.

14.3.3	Intrastate Equal Access Cost Recovery
A.	The intrastate equal access cost recovery monthly charge applies per originating minute of use in order for the Telephone Company to recover the cost of implementing ILP PIC intrastate equal access capability. The monthly charge will apply for 24 months from the date of implementation. A true-up adjustment will be calculated and either billed or remitted to the ILP carrier at the end of the 24 months.

14.3.4	ILP PIC Change Charge Billing Options
A.	**Direct Billing Option**—This option is available when an IC initiates an ILP PIC change order through the CARE interface by either paper, magnetic tape, network data mover or by on-line electronic interface using system specifications determined by the Telephone Company. The IC can designate direct billing on any ILP PIC change orders it chooses by specifying the ILP PIC change charge indicator in position 405. The NRC for a change in presubscription will then be assessed to the IC, instead of the end user.
1.	Lines equipped with selective access blocking are not eligible for this option.
2.	Direct billing is not available for a change in ILP PIC from other carriers on orders placed via the Telephone Company's residence, business or equal access service centers.
3.	Direct billing may also be utilized, at the Telephone Company's discretion, for orders placed to obtain end user service from the Telephone Company.
4.	Direct billing cannot be specified on an order for a change in presubscription which is normally provided at no charge to the end user.
B.	**Reverse Billing Option**—This option is available to ICs for end user-initiated ILP PIC change orders placed at the Telephone Company's residence, business or equal access service centers. The NRCs for all of the IC's end user-initiated ILP PIC change orders placed at the Telephone Company's residence, business or equal access service centers will then be assessed to the IC instead of the end users.
1.	The IC must notify the Telephone Company in writing of its election to establish or cancel the reverse billing option. Establishment or cancellation will be effective within ten business days from the date the Telephone Company receives written notification and must be in effect for a minimum of six months.

15. Operating Territory
15.1 Locations

The operating territory of the Telephone Company for the State of New Hampshire is comprised of the locations defined by the names of rate centers which are contained in Section 15.1.1.

15.1.1	Rate Centers
A.	Alstead, Ashland
B.	Barrington, Bartlett, Bedford, Belmont, Berlin, Bethlehem, Bristol
C.	Campton, Canaan, Candia, Canterbury, Center Harbor, Center Ossipee, Center Sandwich, Charlestown, Claremont, Colebrook, Concord, Conway
D.	Danbury, Deerfield, Derry, Dover, Dublin, Durham
E.	Enfield, Epping, Epsom, Errol, Exeter
F.	Farmington, Fitzwilliam, Franconia, Franklin
G.	Goffstown, Gorham, Greenfield, Greenville, Groveton
H.	Hampstead, Hampton, Hancock, Hanover, Harrisville, Hinsdale
I.	
J.	Jackson, Jaffrey, Jefferson
K.	Keene, Kingston
L.	Laconia, Lancaster, Lebanon, Lisbon, Littleton, Lyme
M.	Madison, Manchester, Marlborough, Marlow, Meredith, Merrimack, Milan, Milford, Milton, Milton Mills, Monroe
N.	Nashua, New Boston, New Market, Newport, N. Conway, N. Stratford, N. Walpole, Northwood, N. Woodstock
O.	Orford
P.	Pelham, Penacook, Peterborough, Piermont, Pike, Pittsburg, Pittsfield, Plainfield, Plaistow, Plymouth, Portsmouth
Q.	
R.	Raymond, Rindge, Rochester, Rumney, Rye Beach
S.	Salem, Sanbornville, Seabrook, Somersworth, S. Hampton, Spofford, Sullivan, Sunapee, Suncook
T.	Tamworth, Tilton, Troy, Twin Mountain
U.	
V.	
W.	Walpole, Warren, W. Chesterfield, W. Lebanon, Westmoreland, W. Stewartstown, Whitefield, Winchester, Wolfeboro, Woodsville

16. Reserved for Future Use

17. Reserved for Future Use

18. Reserved for Future Use

19. Reserved for Future Use

20. Reserved for Future Use

21. Reserved for Future Use

22. Reserved for Future Use

23. Reserved for Future Use

24. Reserved for Future Use

25. Reserved for Future Use

26. Reserved for Future Use

27. Reserved for Future Use

28. Reserved for Future Use

29. Reserved for Future Use

30. Rates and Charges
30.1 Tariff Information

There are no rates and charges contained within this section.

30. Rates and Charges
30.2 General Regulations

There are no rates and charges contained within this section.

30. Rates and Charges
30.3 Ordering of Service

Refer to Bell Atlantic Telephone Companies Tariff FCC No. 11, Section 31.5.

30. Rates and Charges
30.4 Issuance, Payment and Crediting of Customer Bills

There are no rates and charges contained within this section.

30. Rates and Charges
30.5 Carrier Common Line Access Service

30.5.1 Carrier Common Line

ID	Service Category	Rate Element	Rate	USOC
	Switched Access Service	Terminating - Per access minute	0.026494	
		Originating - Per access minute	0.026494	
		One Time Credit - Terminating - Per access minute	0.001593	
		One Time Credit - Originating - Per access minute	0.001593	
	800 Database Access Service	Terminating - Per access minute	0.026494	
		Originating - Per access minute	0.026494	
		One Time Credit - Terminating - Per access minute	0.001593	
		One Time Credit - Originating - Per access minute	0.001593	

30. Rates and Charges
30.6 Switched Access

30.6.1 Entrance Facility

ID	Service Category	Rate Element	Rate	USOC	
	Standard Channel Termination	VG 2W - Monthly	36.14	EFG2X	
		VG 2W - First Channel - NRC	263.85	EFG2X	
		VG 2W - Additional Channels - NRC	179.85	EFG2X	
		VG 4W - Monthly	59.00	EFG4X	
		VG 4W - First Channel - NRC	375.68	EFG4X	
		VG 4W - Additional Channels - NRC	251.11	EFG4X	
		DS1 - Monthly	221.48	EFGDX	
		DS1 - First Channel - NRC	618.09	EFGDX	
		DS1 - Additional Channels - NRC	353.52	EFGDX	
		DS3 - Electrical - Monthly	1,893.00	TYFAX/TYFBX	(T)
		DS3 - Electrical - NRC	0.00	TYFAX/TYFBX	
		DS3 - Optical - Monthly - 135 Mbps	1,054.00	TYFCX/TYFDX	
		DS3 - Optical - NRC - 135 Mbps	0.00	TYFCX/TYFDX	
		DS3 - Optical - Monthly - 560 Mbps	1,054.00	TYFGX/TYFHX	
		DS3 - Optical - NRC - 560 Mbps	0.00	TYFGX/TYFHX	
		DS3 - Optical - Monthly - 2.488 Gbps	1,054.00	TYFJX/TYFKX	
		DS3 - Optical - NRC - 2.488 Gbps	0.00	TYFJX/TYFKX	(T)
	Office Channel Termination	DS1 - NRC	270.66	EFWDX	
		DS1 - Monthly	5.31	EFWDX	
		DS3 - NRC	393.44	EFW3X	
		DS3 - Monthly	66.38	EFW3X	

30. Rates and Charges
30.6 Switched Access

30.6.2 Direct Trunked Transport

ID	Service Category	Rate Element	Rate	USOC	
	Channel Mileage	VG 2W - Fixed - Monthly	33.39	1YTES	
		VG 2W - Per Mile - Monthly	3.89	1YTES	
		VG 4W - Fixed - Monthly	33.39	1YTES	
		VG 4W - Per Mile - Monthly	3.89	1YTES	
		DS1 - Fixed - Monthly	66.00	1YTCS	
		DS1 - Per Mile - Monthly	21.25	1YTCS	
		DS3 - Fixed - Monthly	702.00	1YTDS/1YTOS	(T)
		DS3 - Per Mile - Monthly	120.00	1YTDS/1YTOS	(T)
	Mid-Link	DS1 - NRC	526.52	NRBL1	
		DS3 - NRC	0.00	NRBL3	

30.6.3 Tandem Switched Transport–Local Transport Termination

ID	Service Category	Rate Element	Rate	USOC
	Switched Access Service	Originating - Per access minute	0.000716	
		Terminating - Per access minute	0.000716	
	800 Database Access Service	Originating - Per access minute	0.000716	
		Terminating - Per access minute	0.000716	

30.6.4 Tandem Switched Transport–Local Transport Facility

ID	Service Category	Rate Element	Rate	USOC
	Switched Access Service	Originating - Per mile - Per access minute	0.000004	
		Terminating - Per mile - Per access minute	0.000004	
	800 Database Access Service	Originating - Per mile - Per access minute	0.000004	
		Terminating - Per mile - Per access minute	0.000004	

Admin Filing

30. Rates and Charges
30.6 Switched Access

30.6.5 Tandem Switched Transport--Tandem Switching				
ID	Service Category	Rate Element	Rate	USOC
	Switched Access Service	Originating - Per access minute	0.000503	
		Terminating - Per access minute	0.000503	
	800 Database Access Service	Originating - Per access minute	0.000503	
		Terminating - Per access minute	0.000503	

30.6.6 Interconnection Charge				
ID	Service Category	Rate Element	Rate	USOC
	Switched Access Service	Originating - Per access minute	0.000000	
		Terminating - Per access minute	0.000000	
	800 Database Access Service	Originating - Per access minute	0.000000	
		Terminating - Per access minute	0.000000	

30.6.7 Local Transport--Other					
ID	Service Category	Rate Element	Rate	USOC	
	Operator Passthrough	Per Call	0.322665		(N)
	Installation	NRC - Per line or trunk	95.00		
	Service Rearrangement	0- Passthrough - Change in Operator Service Traffic Arrangement - NRC - Per 1st TOPS office rearranged	169.82		
		0- Passthrough - Change in Operator Service Traffic Arrangement – NRC - Per additional TOPS office rearranged	108.98		
		SS7 Signaling Option Conversion – First trunk converted	0.00	NRBOA	
		SS7 Signaling Option Conversion – Per additional trunk converted	0.00	NRBOB	
	Common Channel Signaling Access	STP Link Termination – NRC	155.00		
		STP Link Termination – Monthly	71.48		
		STP Link Transport - Fixed Monthly	30.12		

30. Rates and Charges
30.6 Switched Access

30.6.7 Local Transport–Other

ID	Service Category	Rate Element	Rate	USOC	
	Common Channel Signaling Access	STP Link Transport - Per Mile Monthly	1.98		
		STP Port - Monthly	450.00		
	SS7 Point Code Change Charge	Initial - NRC	136.87		
		Additional - Each - NRC	15.80		
	DS1 to Voice Multiplexing	Per Arrangement - NRC	0.00	MKW1X	
		Per Arrangement - Monthly	291.38	MKW1X	
	DS3 to DS1 Multiplexing	Per Arrangement - NRC	0.00	MKW3X/MJW3X	(T)
		Per Arrangement - Monthly	950.00	MKW3X/MJW3X	(T)

30.6.8 Local Switching

ID	Service Category	Rate Element	Rate	USOC
	Switched Access Service	Originating - Per access minute	0.001934	
		Terminating - Per access minute	0.001934	
	800 Database Access Service	Originating - Per access minute	0.001934	
		Terminating - Per access minute	0.001934	
	Installation	NRC - Per line or trunk	60.00	
	Carrier Identification Parameter	NRC - Per trunk group	70.00	U7CPG
		Monthly - Per trunk group	60.00	U7CPG

30.6.9 Feature Group 2A

ID	Service Category	Rate Element	Rate	USOC
	Activation of NXX Code	NRC - Per cellular provider - Per NXX code	4,500.00	CUZ-X
	Contour Establishment	NRC - Per Contour - Per CGSA	32,500.00	C251X
	Contour Modifications	NRC - Per modification	150.00	C252X

Admin Filing

30. Rates and Charges
30.6 Switched Access

30.6.10 800 Database Access Service

ID	Service Category	Rate Element	Rate	USOC
	Carrier Identification Charge	Per Query	.003981	
	800 to POTS Number Translation	Per Query	.001580	
	Call Handling and Destination Feature	Per Query	.003466	

30.6.11 Shared Billing Arrangement

ID	Service Category	Rate Element	Rate	USOC
	Processing Charge	NRC - Per service order	26.00	CF3SA

30. Rates and Charges

30.7 Reserved for Future Use

30. Rates and Charges
30.8 Reserved for Future Use

30. Rates and Charges
30.9 Reserved for Future Use

30. Rates and Charges

30.10 Reserved for Future Use

30. Rates and Charges
30.11 Special Facilities Routing of Access Services

There are no rates and charges contained within this section. Customer ICB rates and charges are contained in Section 31.

30. Rates and Charges

30.12 Reserved for Future Use

30. Rates and Charges
30.13 Additional Engineering, Labor and Miscellaneous Services

Refer to Bell Atlantic Telephone Companies Tariff FCC No. 11, Section 30.13.

30. Rates and Charges
30.14 IntraLATA Presubscription (ILP) Services

30.14.1 IntraLATA Presubscription (ILP)

ID	Service Category	Rate Element	Rate	USOC
	ILP PIC Charge	Intrastate Intralata - NRC - Per telephone exchange service line or trunk	5.00	

30.14.2 PIC Verification Service

ID	Service Category	Rate Element	Rate	USOC
	PIC Verification	NRC - Verbal Request - Per telephone number - Per successful verification	1.35	
		NRC - Request via Electronic Interface - Per telephone number - Per successful verification	.60	

30.14.3 Intrastate Equal Access Cost Recovery

ID	Service Category	Rate Element	Rate	USOC
	Intrastate Equal Access Cost Recovery	Monthly - Per originating minute of use	0.00	

30. Rates and Charges
30.15 Operating Territory

There are no rates and charges contained within this section.

30. Rates and Charges

30.16 Reserved for Future Use

30. Rates and Charges

30.17 Reserved for Future Use

30. Rates and Charges

30.18 Reserved for Future Use

30. Rates and Charges

30.19 Reserved for Future Use

30. Rates and Charges

30.20 Reserved for Future Use

30. Rates and Charges

30.21 Reserved for Future Use

30. Rates and Charges

30.22 Reserved for Future Use

30. Rates and Charges
30.23 Reserved for Future Use

30. Rates and Charges

30.24 Reserved for Future Use

30. Rates and Charges

30.25 Reserved for Future Use

30. Rates and Charges

30.26 Reserved for Future Use

30. Rates and Charges

30.27 Reserved for Future Use

30. Rates and Charges

30.28 Reserved for Future Use

30. Rates and Charges

30.29 Reserved for Future Use

31. Rates and Charges–Individual Case Basis (ICB) Customer Specific Charges