YEATON ASSOCIATES, INC.

DE 14-296

NHPUC MAR10'15 AM10:11

March 9, 2015

State of New Hampshire
Public Utilities Commission
21 S. Fruit St, Suite 10
Concord, NH 03301-2429

Attn: Ms. Debra Howland, Executive Director

Re: Application Renewable energy Source Eligibility

Dear Ms. Howland:

Please find enclosed the re-submitted application for permanent thermal REC certification for Androscoggin Valley Hospital. The application was submitted electronically and in hard copy on March 4. However, it has come to our attention that the originally submitted hard copies contained significant editing errors, which are corrected herein.

Respectfully,

Wayne G. Fillion, P.E.

President

Enclosure

66 Jackson St, Littleton, NH 03561 | 40 So. River Rd #35, Bedford, NH 03110 | Ph: 603.444.6578 | www.yeatonassociates.com

YEATON ASSOCIATES, INC.

March 3, 2015

State of New Hampshire
Public Utilities Commission
21 S. Fruit St, Suite 10
Concord, NH 03301-2429

Attn: Ms. Debra Howland, Executive Director

Re: Application Renewable energy Source Eligibility

Dear Ms. Howland:

On December 5, 2014, the New Hampshire Public Utilities Commission granted (DE 14-296) interim certification for Androscoggin Valley Hospital, thermal biomass facility as a Class I Thermal renewable energy source, effective as of March 21, 2014, through 90 days following the date of adoption of a final ruling, pursuant to N.H. RSA 362-F.

On December 5, 2014, the Commission adopted the Puc 2500 rules. In Part Puc 2505.02(g) of the adopted rules, the Commission holds that thermal facilities certified during the interim period (from January 15, 2015 through December 5, 2014) must submit updated materials that demonstrate compliance, within 90 days of the Ruling's effective date, thus by Thursday, March 5, 2015. The purpose of this letter is to provide such updated materials.

In our previous Application for Interim Certification, in addition to all other applicable requirements, we employed the methodology for measuring useful thermal energy set forth in Puc 2505.02(e)(2). In today's Application for Permanent Certification, we shall instead employ Puc 2506.06 Request for Alternative Method for Measuring Thermal Energy. In Attachment 1, we provide the information that is requested by the Commission for facilities utilizing an Alternative Method, per Puc 2505.06.

Enclosed are two copies of the previous Application for Interim Certification, two copies of this cover letter, and two copies of Attachment 1.

Please let me know if you have any questions or need additional information.

Respectfully,

Wayne G. Fillion, P.E.

President

Enclosure



66 Jackson Street | Littleton, NH 03561 | Ph: 603.444.6578 | Fax: 603.444.2364
www.yeatonassociates.com

**Attachment 1**

**Puc 2506.06: Request for Alternative Method for Measuring Thermal Energy**
**Required Information**

(1) The name, mailing address, daytime telephone number, and e-mail address of the person requesting approval for the alternative method;

David Kyle, PhD, P.E.
66 Jackson Street, Littleton, NH 03561
(603) 444-6578
dkyle@yeatonassociates.com

(2) The name and location of the source at which the alternative method will be implemented;

Androscoggin Valley Hospital
59 Paige Hill Road
Berlin, NH 03570

(3) A description of the metering method otherwise required by these rules and the reasons it cannot be used with the applicant's facility;

From Puc 2506.04(m):

(1) "$Q_g$" means the thermal energy generated from biomass, stated in Btu;

(2) "$dm_{out}/dt$" means mass flow metered upstream of distribution and downstream of parasitic loads, stated in pounds per hour;

(3) "$h_{out}$" means the specific enthalpy at the metering point determined by temperature data and, for superheated steam, by pressure data, stated in Btu's per pound;

(4) "$dm_{in}/dt$" means mass flow of water into the feedwater or condensate pumps, stated in pounds per hour;

(5) "$h_{in}$" means the specific enthalpy at the metering point which will be a function of the enthalpy of incoming condensate and make-up water prior to the first condensate or feedwater pumps, stated in Btu's per pound;

(6) "t" means the intervals at which readings are recorded, stated in hours;

(7) All metering systems shall measure boiler feedwater flow, pressure and temperature as close to the first feedwater pump inlet as possible, thereby excluding the deaerator;

(8) Metering for systems that produce hot water shall include sensors for temperature and hot water mass flow placed as close as possible to the boiler hot water distribution header inlet;

(9) Metering for systems that produce steam shall include sensors for temperature, pressure and steam flow placed as close as possible to the steam distribution header inlet and thereby prior to distribution to process loads;

(10) For saturated steam systems, pressure and temperature shall be measured to verify the absence of superheat at the measurement point;

(11) For superheated systems, both pressure and temperature measurements shall be required;

(12) Regardless of phase, the enthalpy under the measured conditions shall either be calculated using International Association for the Properties of Water and Steam (IAPWS) Industrial Formulation 1997 (IF97) formulas, August 2007 revision, http://www.iapws.org/relguide/IF97-Rev.pdf, as specified in Appendix B, or taken from IAPWS or derivative steam tables; and

(13) Thermal sources using thermal biomass renewable energy technologies shall calculate Q, the useful thermal energy produced, by calculating the product of $dm_{out}/dt$, ($h_{out}$), and t, and subtract from that number the product of $dm_{in}/dt$, $h_{in}$ and t, as stated in the formula below:

$Q_g = [dm_{out}/dt * (h_{out}) * t] - [dm_{in}/dt * (h_{in}) * t]$

<u>Reasons that it cannot be used at Androscoggin:</u>

The methodology which is used is the following**:**

Total Daily Thermal Energy = [ ($\dot{m}_{out}$) x ($h_{out}$) - ($\dot{m}_{in}$) x ($h_{in}$) ] x (0.98).

- ($\dot{m}_{out}$) is the daily pounds of steam leaving the boiler
- ($h_{out}$) is the daily average specific enthalpy (Btu/lb) of steam leaving the boiler calculated using the steam temperature which is recorded once per day, and using the assumption that the steam is saturated.
- ($\dot{m}_{in}$) is the daily pounds of boiler feedwater into the boiler.


66 Jackson St, Littleton, NH 03561 | 40 So. River Rd #35, Bedford, NH 03110 | Ph: 603.444.6578 | www.yeatonassociates.com

- ($h_{in}$) is the daily average specific enthalpy (Btu/lb) calculated using the observed feedwater temperature.
- 0.98 is the assumed 2.0% loss in useful thermal energy due to parasitic loads, as required by draft PUC 2506.05(f).

By comparison with 2506.04(m.13) the calculation is similar to the prescribed methodology. An explanation for each exception follows.

- Mass flow rate of boiler feedwater, $\dot{m}_{in}$, is not measured directly as required by Puc 2506.04(m), because no feedwater flow meter was installed during construction. For the purposes of the calculation, we assume that it is equal to ($\dot{m}_{out}$), the measured supply steam flow rate. There exist no ancillary steam usages or parasitic loads between the steam flow meter on the steam supply line and the feedwater line, therefore the assumption is sound.

- The average daily specific enthalpy of entering feedwater ($h_{in}$) is assumed equal to that of saturated water at 195˚F. The facility staff reports this to be the average temperature as monitored daily on an analogue thermometer positioned at the boiler feedwater just before entering the boiler. Note that a variation of ± 10°F has an effect on the order of approximately 1.0% on the calculated Useful Thermal Energy, which is well within the required 5% system accuracy.

- The temperature of the supply steam, and the mass flow rate, are measured directly, however there is no pressure measurement on the steam supply line as required Puc 2506.04(m). The average daily specific enthalpy of steam leaving the boilers ($h_{out}$) is assumed equal to saturated steam at the daily recorded supply temperature. This boiler model has no capability for producing superheated steam (no superheat coils).

- ($h_{out}$) and ($\dot{m}_{out}$) are daily values in the above equation, not hourly. The reason for this is that although the mass flow rate is measured hourly electronically, temperature is not recorded hourly, and so the (multiplicative) product ($h_{out}$)x($\dot{m}_{out}$) can only be reported as a daily average value.

(4) <u>A description of the proposed alternative method;</u>

We are proposing that the methodology for measuring useful thermal energy continue to be exactly the methodology that has been used during the interim period. Please see the attached Application for a thorough description of this methodology.

(5) <u>Technical data and information demonstrating that the accuracy of the method otherwise required by these rules will be substantially achieved by the proposed alternative method, such data and information may include third party data such as product test results from independent test laboratories, performance data based on nationally recognized product test/certification programs,</u>


66 Jackson St, Littleton, NH 03561 | 40 So. River Rd #35, Bedford, NH 03110 | Ph: 603.444.6578 | www.yeatonassociates.com

published resource data for use in calculations, and examples of the use of the method by other organizations for similar purposes; and

All sensor information has been provided on the Interim Application (enclosed), Part 3. Briefly,

1. Steam mass flow meter accuracy = 2.48%
2. Steam supply Temperature Sensor accuracy = 0.05% (typical thermistor)
3. Required system accuracy (= ± 5%)

(6) A statement from a professional engineer licensed by the state of New Hampshire and in good standing of the meter accuracy rate that will be achieved by the alternative metering method and that the proposed alternative method is technologically sound.

I, David Kyle, P.E., attest that the meter accuracy of 5.0% will be achieved by the alternative metering method given proper maintenance and repair practices, and that the proposed alternative method is technologically sound.

David Kyle 03/03/2015

Name Date



66 Jackson St, Littleton, NH 03561 | 40 So. River Rd #35, Bedford, NH 03110 | Ph: 603.444.6578 | www.yeatonassociates.com

YEATON ASSOCIATES, INC.

October 22, 2014

State of New Hampshire
Public Utilities Commission
21 S. Fruit St, Suite 10
Concord, NH 03301-2429

Attn: Ms. Debra Howland, Executive Director

Re: Application Renewable Energy Source Eligibility: Androscoggin Valley Hospital

Dear Ms. Howland:

Enclosed, please find a completed, original Application for Renewable Energy Source Eligibility for Class I Thermal Sources with Renewable Thermal Energy Capacity Greater than 150,000 Btu/hr, pursuant to New Hampshire Administrative Code PUC 2500 Rules.

Also enclosed are two copies of the Application, along with two copies of this cover letter.

Please let me know if you have any questions or need additional information.

Respectfully,

David M. Kyle, P.E.

Enclosure

66 Jackson St, Littleton, NH 03561 | 40 So. River Rd #35, Bedford, NH 03110 | Ph: 603.444.6578 | www.yeatonassociates.com

# State of New Hampshire
# Public Utilities Commission

21 S. Fruit Street, Suite 10, Concord, NH 03301-2429

**DRAFT**

**APPLICATION FORM FOR**

## RENEWABLE ENERGY SOURCE ELIGIBILITY FOR CLASS I THERMAL SOURCES WITH RENEWABLE THERMAL ENERGY CAPACITY GREATER THAN 150,000 BTU/HR

*Pursuant to New Hampshire Administrative Code PUC 2500 Rules*

- Please submit one (1) original and two (2) paper copies of the completed application and cover letter* to:

  Debra A. Howland
  Executive Director
  New Hampshire Public Utilities Commission
  21 South Fruit Street, Suite 10
  Concord, NH 03301-2429

- Send an electronic version of the completed application and the cover letter electronically to executive.director@puc.nh.gov.

* The cover letter must include complete contact information and identify the renewable energy class for which the applicant seeks eligibility. Pursuant to PUC 2505.01, the Commission is required to render a decision on an application within 45 days of receiving a completed application.

If you have any questions please contact Barbara Bernstein at (603) 271-6011 or Barbara.Bernstein@puc.nh.gov.

**Only facilities that began operation after January 1, 2013 are eligible.**

Is this facility part of a Commission approved aggregation?

Yes ____ No __x__

Aggregator's Company Name: _____

Aggregator Contact Information: _____

# Contents

Part 1. General Application Information ..... 3
Part 2. Technology Specific Data ..... 4
Part 3. Metering and Measurement of Thermal Energy and REC Calculations ..... 5
Part 4. Affidavits ..... 8
Application Checklist ..... 9
Appendix A. Excerpt from Puc 2500 – Certain Thermal Metering Provisions ..... 10

# Attachment Labeling Instructions

**Please label all attachments by Part and Question number to which they apply (e.g. Part 3-7). For electronic submission, name each attachment file using the Owner Name and Part and Question number (e.g. Pearson Part 3-7).**

The manufacturer of the boiler system, and the seller of the boiler system is:

Messersmith Manufacturing Inc.
2612 F Road
Bark River, MI 49807
Office (9906) 466-9010
Fax (906) 446-2843

# Part 1. General Application Information

Please provide the following information:

## Applicant

Name: Androscoggin Valley Hospital

Mailing Address: 59 Page Hill Road

Town/City: Berlin State: NH Zip Code: 03570

Primary Contact: Stephen McMann, Director of Facilities

Telephone: 603-326-5681 Cell: _____

Email Address: stephen.mcmann@avhnh.org

## Facility

Name: Androscoggin Valley Hospital

Physical Address: 59 Page Hil Road

Town/City: Berlin State: NH Zip Code: 03570

If the facility does not have a physical address, the Latitude: _____ & Longitude _____

## Installer

Name: Langford and Low, General Contractor

Installer License Number: _____

Mailing Address: 248 Warren Avenue

Town/City: Portland State: ME Zip Code: 04104

Primary Contact: Daniel Williams

Telephone: (207) 318-0442 Cell: _____

Email Address: projects@langfordandlow.com

If the equipment was installed by the facility owner, check here: ☐

## Facility Operator

If the facility operator is different from the owner, please provide the following:

Name: _____

Facility Operator Telephone Number: _____

## Independent Monitor

Name: Wayne G. Fillion

Mailing Address: 66 Jackson Street

Town/City: Littleton State: NH Zip Code: 03561

Primary Contact: David Kyle

Telephone: 603.444.6578 Cell:

Email Address: dkyle@yeatonassociates.com

## NEPOOL/GIS Asset ID and Facility Code

***In order to qualify your facility's thermal energy production for RECs, you must register with the NEPOOL – GIS. Contact information for the GIS administrator follows:***

**James Webb**
**Registry Administrator, APX Environmental Markets**
224 Airport Parkway, Suite 600, San Jose, CA 95110
Office: 408.517.2174
jwebb@apx.com

Mr. Webb will assist you in obtaining a GIS facility code and an ISO-New England asset ID number.

GIS Facility Code # 15628 Asset ID # NON43842

1. Has the facility been certified under another non-federal jurisdiction's renewable portfolio standards?

Yes [ ] No [x]

If you selected yes, *please provide proof of certification in the form of an attached document as Attachment 1-1.*

*2. Attach any supplementary documentation that will help in classification of the facility as Attachment 1-9*

# Part 2. Technology Specific Data

## All Technologies

Fuel type (solar, geothermal, or biomass): biomass

Rated Thermal Capacity (Btu/hr): 8,368,750 Btu/hr (250 boiler horsepower)

Date of initial operation using renewable fuels: March 24, 2014

### Biomass

If a thermal biomass facility, provide proof of New Hampshire Department of Environmental Services approval that the facility meets the emissions requirements set forth in Puc 2500, as Attachment 2-1.

### Solar Thermal

If a solar thermal facility, please provide the Solar Rating and Certification Corporation rating based on Mildly Cloudy C (kBtu/day): _____

### Geothermal

If a geothermal facility, please provide the following:

The coefficient of performance (COP): _____

The energy efficiency ratio of the system: _____

## Part 3. Metering and Measurement of Thermal Energy and REC Calculations

This section deals with the thermal metering system including methods for calculation and reporting useful thermal energy. **A copy of PUC 2506.04 of the RPS rules is included as Appendix A.**

Using the table below, identify the thermal metering system or custom components (e.g., heat meters, flow meters, pressure and temperature sensors) used to measure the useful thermal energy and enter the accuracy of measurement for the entire system:

| System or Component | Product name | Product Manufacturer | Model No. |
|---|---|---|---|
| Supply steam mass flow rate | Rosemount 8800D Series Vortex Flowmeter | | Model #8800DR030 Part # 8800DR030Sa1 |
| Supply Steam Temperature | Rosemount 8800D Multivariable Vortex temperature sensor | | Integral to the above model |
| | | | |
| | | | |
| Total System Accuracy (Percent) | Please not that for the interim period we will use a methodology under 2505.02(e), which appears not to require calculation of "Total System Accuracy". That said, we offer the following data: Mass Flow Meter: Manufacturer's guaranteed accuracy is +- 2.48% of rate (please see p. 18 of Attachment 3-1. | | |

*Attach component specification sheets (Accuracy, Operating Ranges) as Attachment 3-1.* [x]

*Attach a simple schematic identifying the location of each sensor that is part of the metering system as Attachment 3-2.* [x]

Check the applicable standard for meter accuracy prescribed in Puc 2506.04 among the six choices below (compliance with Puc 2506.04 shall be certified by a professional engineer licensed by the state of New Hampshire and in good standing):

*If the facility is a large thermal source using a liquid or air based system, check the method that applies:*

A. Installation and use of heat meters capable of meeting the accuracy provisions of European Standard EN 1434 published by CEN, the European Committee for Standardization. The heat meter shall have the highest Class flow meter that will cover the design flow range at the point of measurement and a temperature sensor pair of Class 5K or lower. [ ]

B. Installation and use of meters that do not comply with European Standard EN 1434, provided that the manufacturers' guaranteed accuracy of the meters is ±5.0% or better, [ ]

C. Use of an alternative metering method approved pursuant to Puc 2506.06. [ ]

*If the facility is a large thermal source using a steam-based system, check the method that applies:*

D. Installation and use of meters with accuracy of ±3.0% or better. [x]

E. Installation and use of meters with system accuracy that do not meet D but are ±5% or better. [ ]

F. Use of an alternative metering method approved pursuant to Puc 2506.06. [ ]

Please summarize the manufacturer's recommended methods and frequency for metering system calibration and provide reference for source document (e.g. owners/operators manual):

Please see attached " Attachment 3-3 - Calibration Remarks"

REC Calculation Discount factor for meter accuracy (Enter 0 if no discount is required): 0 %

If the meters used to measure useful thermal energy comply with the accuracy of the European Standard EN 1434 for liquid systems or use of meters with accuracy of ±3.0% or better for steam systems enter zero, for all other systems enter the sum total of the manufacturer's guaranteed accuracy of the meters used or the accuracy of the alternative method approved pursuant to Puc 2506.06.

REC Calculation Discount factor for operating energy and thermal energy losses: 2.0 %

*Check the method used for determining the operating energy and thermal loss factor among the choices below:*

**Default Factor** 2.0

- For sources using solar thermal technology, the discount factor shall be 3.0% of the useful thermal energy produced;
- For sources using geothermal technology, the discount factor shall be 3.6% of the useful thermal energy produced;
- For sources using thermal biomass renewable energy technology, the discount factor shall be

2.0% of the useful thermal energy produced.

**Actual Metering** ☐

- Include a simple schematic identifying the operating energy and thermal energy losses and placement of the meters.

## Interim Alternative Metering Method

Until such time as the Puc 2500 rule is finalized applicants may utilize an alternative method as described in the draft rule 2505.02(e)(2):

> *In lieu of the information required by Puc 2505.02 (d) (11) through (13), a thermal source may submit a detailed explanation of the methodology used to measure and calculate thermal energy and an attestation by a professional engineer that is licensed in New Hampshire and in good standing that the methodology for measuring useful thermal energy and calculating certificates is sound.*

Please see attachment, "Attachment 3-4 - Interim Alternative Metering Method"

## Part 4. Affidavits

### Owners Affidavit

The following affidavit must be completed by the owner attesting to the accuracy of the contents of the application pursuant to PUC 2505.02 (b) (14).

AFFIDAVIT

I, STEPHEN McMANN have reviewed the contents of this application and attest that it is accurate and is signed under the pains and penalties of perjury.

Applicant's Signature _____ Date 10-23-14

Applicant's Printed Name STEPHEN McMANN

Subscribed and sworn before me this 23rd Day of October (month) in the year 2014

County of Coos State of New Hampshire

Darlene M. Blais

Notary Public/Justice of the Peace Seal

My Commission Expires My Commission Expires August 24, 2016

### NH Professional Engineer Affidavit

AFFIDAVIT

I, David M. Kyle attest that this facility meets the requirements of the thermal REC eligibility requirements of Puc 2500, including the thermal metering and measurement methodologies and standards and REC calculation methodologies.

Professional Engineer's Signature _____ Date 10/21/2014

Professional Engineer's Printed Name David M. Kyle

NH Professional Engineer License Number 14525

PE Stamp

STATE OF NEW HAMPSHIRE
DAVID M. KYLE No. 14525 LICENSED
PROFESSIONAL ENGINEER

| Application Checklist | | | | |
|---|---|---|---|---|
| Application Section | | Item Description | Attachment Required | Check box |
| Part 1-1 | | Applicant Information | | ☐ |
| Part 1-2 | | Facility Location Information | | ☐ |
| Part 1-3 | | Installer Contact Information | | ☐ |
| Part 1-4 | | Equipment Seller Information | | ☐ |
| Part 1-5 | | Facility Monitor Information | | ☐ |
| Part 1-6 | | Regulatory Approvals for REC Requirements | Yes | ☐ |
| Part 1-7 | | Other REC Certifications | | ☐ |
| Part 1-8 | | Facility Output Information | | ☐ |
| Part 1-9 | | Facility Operator Information | | ☐ |
| Part 1-10 | | Additional Facility Classification Information | | ☐ |
| Part 1-11 | | Attestation that Building Codes are Met | | ☐ |
| Part 2-1 | | Rated Thermal Capacity | | ☐ |
| Part 2-2a | | Thermal Biomass Facility, 3-99 MMBTu/hour Output | | ☐ |
| Part 2-2b | | Thermal Biomass Facility, 100+ MMBTu/hour Output | | ☐ |
| Part 2-3 | | Solar Thermal Facility Solar Rating and Certification Corporation Rating | | ☐ |
| Part 2-4a | | Geothermal Facility Coefficient of Performance | | ☐ |
| Part 2-4b | | Geothermal Facility Energy Efficiency Ratio | | ☐ |
| Part 3-1 | | Equipment and Meter Description | | ☐ |
| Part 3-2 | | Recommended Methods for Meter Calibration | | ☐ |
| Part 3-3 | | Attestation that Meters meet PUC 2506 Requirements | | ☐ |
| Part 3-4 | | Guaranteed Accuracy of Meters | | ☐ |
| Part 3-5a | | Small Thermal Source- Calculating Useful Thermal Out | | ☐ |
| Part 3-5b | | Large Thermal Source- Calculating Useful Thermal Out | | ☐ |
| Part 3-6 | | Meter Accuracy Discount Factor | | ☐ |
| Part 3-7a | | PUC 2506 Operating Energy and Thermal Loss Discount Factor | | ☐ |
| Part 3-7b | | Determining Operating Energy and Thermal Loss Discount Factor | | ☐ |
| Part 4-1 | | Owner Affidavit | | ☐ |
| Part 4-2 | | Professional Engineer Affidavit | | ☐ |

# Appendix A. Excerpt from Puc 2500 – Certain Thermal Metering Provisions

For complete rules and requirements related to the RPS and REC eligibility, please refer to Puc 2500.

Puc 2506.04 Metering of Sources that Produce Useful Thermal Energy

(a) Sources producing useful thermal energy shall comply with this part in metering production of useful thermal energy.

(b) Sources shall retain an independent monitor to verify the useful thermal energy produced.

(c) Sources shall take data readings for the measurement of useful thermal energy at least every hour. The useful thermal energy produced shall be totaled for each 24 hour period, each monthly period, and each quarter.

(d) Sources shall install meters to measure thermal energy output in compliance with the manufacturer's recommendations and as noted in this part.

(e) Large thermal sources using a liquid or air based system shall measure the useful thermal energy produced using one of the following methods:

(1) Installation and use of heat meters with an accuracy that complies with European Standard EN 1434 published by CEN, the European Committee for Standardization, and that complies with paragraph (k), (l) or (m). The heat meter shall have the highest Class flow meter that will cover the design flow range at the point of measurement and a temperature sensor pair of Class 5K or lower. Compliance shall be certified by a professional engineer licensed by the state of New Hampshire and in good standing;

(2) Installation and use of meters that do not comply with subparagraph (e) (1), provided that the manufacturers' guaranteed accuracy of the meters is ±5.0% or better, and provided that a professional engineer licensed by the state of New Hampshire and in good standing certifies that the meters were installed and operate according to the manufacturers' specifications and in accordance with paragraph (k), (l) or (m); or

(3) Use of an alternative metering method approved pursuant to Puc 2506.06, provided that the accuracy of any such method is ±5.0% or better, and provided that a professional engineer licensed by the state of New Hampshire and in good standing certifies that the source implemented the alternative method as approved by the commission and certifies that the alternative method achieves the stated accuracy of ±5.0% or better.

(f) Large thermal sources using a steam-based system shall measure the useful thermal energy produced using one of the following methods:

(1) Installation and use of meters with accuracy of ±3.0% or better, which compliance shall be certified by a professional engineer licensed by the state of New Hampshire and in good standing and in accordance with paragraph (m);

(2) Installation and use of meters that do not comply with the accuracy of subparagraph (f)(1), provided that the manufacturer's guaranteed accuracy of the meters is ±5.0% or better, and provided that a professional engineer licensed by the state of New Hampshire and in good standing certifies that the meters were installed and operate according to the manufacturer's specifications and in accordance with paragraph (m); or

(3) Use of an alternative metering method approved pursuant to this section, provided that the accuracy of any such method is ±5.0% or better, and provided that a professional engineer licensed by the state of New Hampshire and in good standing certifies that the source implemented the alternative method as approved by the commission and certifies that the alternative method achieves the stated accuracy of ±5.0% or better.

(g) Small thermal sources shall measure useful thermal energy produced using one of the following methods:

(1) For any small thermal sources, the methods described in paragraphs (e) or (f);

(2) For small thermal sources using solar thermal technologies, the method described in paragraph (h);

(3) For small thermal sources using geothermal technologies, the method described in paragraph (i); or

(4) For small thermal sources using thermal biomass technologies, the method described in paragraph (j).

(h) Calculation of useful thermal energy produced by small thermal sources using solar technologies.

(1) "Q" means thermal energy generated, stated in Btu's.

(2) "R" means the Solar Rating and Certification Corporation (SRCC) OG100 rating on Mildly Cloudy C Conditions, stated in thousands of Btu's per day.

(3) "L" means the orientation and shading losses calculated based on solar models such as Solar Pathfinder, T-sol, Solmetric, or another model approved by the Commission, converted from a percentage to the equivalent number less than 1.

(4) "t" means the total operating run time of the circulating pump as metered, stated in hours.

(5) "h" means 11 hours per day to convert the SRCC OG100 rating to an hourly basis (conversion factor).

(6) To calculate Q, the useful thermal energy produced by small thermal sources using solar technologies, the source shall compute the product of R, t and the result of 1 minus L, and divide the result by the product of h and 1,000, as in the formula below:

$$Q = [R * t * (1 - L)] / (h * 1{,}000)$$

(i) Calculation of useful thermal energy produced by small thermal sources using geothermal technologies.

(1) "Q" means thermal energy generated, stated in Btu's.

(2) "HC" means the Air Conditioning, Heating and Refrigeration Institute (AHRI) certified heating capacity at part load, stated in Btu's per hour.

(3) "COP" means the AHRI Certified Coefficient of Performance.

(4) "t" means total operating run time of the pump when the entering water temperature is greater than the leaving water temperature, stated in hours.

(5) Small thermal sources using geothermal technologies may calculate Q, the useful thermal energy produced, by multiplying HC by the difference between COP and 1, multiplying the result by t, and dividing the result by COP, as in the formula below:

$$Q = [HC * (COP - 1) * t] / COP$$

(j) Calculation of useful thermal energy produced by small thermal sources using thermal biomass renewable energy technologies.

(1) "Q" means the thermal energy generated, stated in Btu's.

(2) "D" means the default pellet density, which shall be 0.0231 pounds per cubic inch.

(3) "R" means the auger revolutions per hour.

(4) "V" means auger feed volume, stated in cubic inches per auger revolution. Small thermal sources shall assume that V equals one of the following:

a. 5 cubic inches per revolution for augers with a 2" inside diameter;

b. 20 cubic inches per revolution for augers with a 3" inside diameter;

c. 50 cubic inches per revolution for augers with a 4" inside diameter;

d. 95 cubic inches per revolution for augers with a 5" inside diameter; or

e. 150 cubic inches per revolution for augers with a 6" inside diameter.

(5) "EC" means the default energy content of pellet fuel, which shall be 7870 Btu per pound.

(6) "ASE" means the default thermal efficiency expressed as a percentage based on the manufacturer's warranty of average seasonal thermal efficiency, or based on a default thermal efficiency of 65%.

(7) "t" means the total auger run time in hours as metered.

(8) The estimated amount of fuel burned (the product of D, R, V and t) shall be verified by the fuel purchase records and fuel inventory.

(9) Small thermal sources using thermal biomass renewable energy technologies with wood pellets as the fuel source may calculate Q, the useful thermal energy produced, by computing the product of D, R, V, EC, ASE and t, as in the formula below:

$$Q = (D * R * V * EC * ASE * t)$$

(k) Thermal sources using solar thermal technologies.

(1) "$Q_g$" means the heat generated in the collector loop, stated in Btu's.

(2) "dm/dt" means the mass flow of the collector working fluid measured near the inlet to the solar storage tank, stated in pounds per hour.

(3) "$c_p$" means the specific heat of the collector fluid, stated in Btu's per pound (mass), degrees Fahrenheit (BTU/lbm-°F).

(4) "Ti" means the collector loop inlet temperature measured near the outlet of the solar storage tank, stated in degrees Fahrenheit.

(5) "To" means the collector loop outlet temperature measured near the inlet to the solar storage tank, stated in degrees Fahrenheit.

(6) "t" means the frequency at which data readings are recorded, stated in hours.

(7) Meter sensors shall be installed on the collector loop as close to the water storage tank as practical and in accordance with the meter manufacturer's guidance.

(8) Thermal sources using solar thermal technologies shall calculate Q, the useful thermal energy produced, by calculating the product of dm/dt, $c_p$, the difference between To and Ti, and t, as stated in the formula below:

$$Q_g = (dm/dt)*c_p *(To - Ti) * t$$

(l) Thermal sources using geothermal technologies.

(1) "$Q_g$" means heat generated in the ground loop, stated in BTU's.

(2) "dm/dt" means mass flow measured near the outlet of the ground loop, stated in pounds per hour.

(3) "$c_p$" means specific heat of the working fluid, stated in BTU/lbm-°F.

(4) "t" means the frequency at which data readings are recorded, stated in hours.

(5) "Ti" means ground loop inlet temperature measured at the inlet to the ground loop, stated in degrees Fahrenheit.

(6) "To" means ground loop outlet temperature measured at the outlet from the ground loop, stated in degrees Fahrenheit.

(7) Bleed points, supplemental boilers and cooling towers shall be excluded from the calculation.

(8) Meter sensors shall be installed on the ground loop as close to the ground loop inlet and outlet as practical and in accordance with the manufacturer's recommendation.

(9) Thermal sources using geothermal technologies shall calculate Q, the useful thermal energy produced, by calculating the product of dm/dt, $c_p$, the difference between To and Ti, and t, as stated in the formula below:

$$Q_g = (dm/dt) * c_p * (To - Ti) * t$$

(m) Thermal sources using thermal biomass renewable energy technologies.

(1) "$Q_g$" means the thermal energy generated from biomass, stated in Btu.

(2) "$dm_{out}/dt$" means mass flow metered upstream of distribution and downstream of parasitic loads, stated in pounds per hour.

(3) "$h_{out}$" means the specific enthalpy at the metering point determined by temperature data and, for superheated steam, by pressure data, stated in Btu's per pound.

(4) "$dm_{in}/dt$" means mass flow of water into the feedwater or condensate pumps, stated in pounds per hour.

(5) "$h_{in}$" means the specific enthalpy at the metering point which will be a function of the enthalpy of incoming condensate and make-up water prior to the first condensate or feedwater pumps, stated in Btu's per pound.

(6) "t" means the frequency at which data readings are recorded, stated in hours.

(7) All metering systems shall measure boiler feedwater flow, pressure and temperature as close to the first feedwater pump inlet as possible, thereby excluding the deaerator.

(8) Metering for systems that produce hot water shall include sensors for temperature and hot water mass flow placed as close as possible to the boiler hot water distribution header inlet.

(9) Metering for systems that produce steam shall include sensors for temperature, pressure and steam flow placed as close as possible to the steam distribution header inlet and thereby prior to distribution to process loads.

(10) For saturated steam systems, pressure and temperature shall be measured to verify the absence of superheat at the measurement point.

(11) For superheated systems, both pressure and temperature measurements shall be required.

(12) Regardless of phase, the enthalpy under the measured conditions shall either be calculated using International Association for the Properties of Water and Steam (IAPWS) Industrial Formulation 1997 (IF97) formulas or taken from IAPWS or derivative steam tables.

(13) Thermal sources using thermal biomass renewable energy technologies shall calculate Q, the useful thermal energy produced, by calculating the product of $dm_{out}/dt$, ($h_{out}$), and t, and subtract from that number the product of $dm_{in}/dt$, $h_{in}$ and t, as stated in the formula below:

$$Q_g = [dm_{out}/dt * (h_{out}) * t] - [dm_{in}/dt * (h_{in}) * t]$$

Puc 2506.05 Calculation of Certificates for Production of Useful Thermal Energy

(a) Sources producing useful thermal energy, the independent monitor or the designated representative shall report to GIS the useful thermal energy produced and the amount of RECs calculated pursuant to this part, as verified by the source's independent monitor.

(b) Useful thermal energy shall be expressed and reported in megawatt-hours where each 3,412,000 Btu's of useful thermal energy is equivalent to one megawatt-hour.

(c) Small thermal sources shall receive certificates based on the useful thermal energy produced as metered pursuant to Puc 2506.04(e) or (f) and discounted, as applicable, by the discount for meter accuracy pursuant to paragraph (e) or as calculated pursuant to Puc 2506.04(h), (i), or (j).

(d) Large thermal sources shall receive certificates based on the useful thermal energy calculated pursuant to Puc 2506.04(e) or (f), discounted by the sum of the percentage discount for meter accuracy pursuant to paragraph (e) and the percentage discount for operating energy and thermal storage losses, or parasitic load, pursuant to paragraph (f).

(e) The discount factor for meter accuracy referenced in paragraphs (c) and (d) shall be one of the following:

(1) If the meters used to measure useful thermal energy output comply with the accuracy of the European Standard EN 1434 as provided in Puc 2506.04(e)(1) or the accuracy pursuant to Puc 2506.04(f)(1), there shall be no meter accuracy discount; or

(2) If the meters used to measure useful thermal energy output do not comply with the accuracy of the European Standard EN 1434 as provided in Puc 2506.04(e)(1) or the accuracy pursuant to Puc 2506.04(f)(1), the applicable meter discount shall be the manufacturer's guaranteed accuracy of the meters used or the accuracy of the alternative method approved pursuant to Puc 2506.06.

(f) The discount factor for large thermal sources for parasitic load referenced in paragraph (d) shall be one of the following:

(1) For sources using solar thermal technology, the discount factor shall be 3.0% of the useful thermal energy produced as measured pursuant to Puc 2506.04;

(2) For sources using geothermal technology, the discount factor shall be 3.6% of the useful thermal energy produced as measured pursuant to Puc 2506.04;

(3) For sources using thermal biomass renewable energy technology, the discount factor shall be 2.0% of the useful thermal energy produced as measured pursuant to Puc 2506.04; or

(4) The discount factor shall be the source's actual metering of the parasitic load.

Puc 2506.06 Request for Alternative Method for Measuring Thermal Energy

(a) A source shall not use an alternative metering method until that alternative method is approved by the commission.

(b) A source seeking approval of an alternative method shall submit an application to the commission that includes the following information:

(1) The name, mailing address, daytime telephone number, and e-mail address of the person requesting approval for the alternative method;

(2) The name and location of the source at which the alternative method will be implemented;

(3) A description of the metering method otherwise required by these rules and the reasons it cannot be used with the applicant's facility;

(4) A description of the proposed alternative method;

(5) Technical data and information demonstrating that the accuracy of the method otherwise required by these rules will be substantially achieved by the proposed alternative method (such data and information may include third party data such as product test results from independent test laboratories, performance data based on nationally recognized product test/certification programs, published resource data for use in calculations, and examples of the use of the method by other organizations for similar purposes); and

(6) Certification by a professional engineer licensed by the state of New Hampshire and in good standing of the meter accuracy rate that will be achieved by the alternative metering method and that the proposed alternative method is technologically sound.

(a) Electricity generation in megawatt-hours and useful thermal energy expressed in megawatt-hours shall be measured and verified in accordance with ISO-NE and GIS operating rules and this Part.

(c) The commission shall approve an alternative metering method that satisfies the requirements of paragraph (b).

# Attachment 2-1

Proof of NH DES Approval

The State of New Hampshire
**DEPARTMENT OF ENVIRONMENTAL SERVICES**

**Thomas S. Burack, Commissioner**

July 14, 2014

Mr. Stephen McMann
Androscoggin Valley Hospital, Inc
59 Page Hill Road
Berlin, New Hampshire 03570

**RE: Particulate Emissions Stack Test**

Dear Mr. McMann:

The New Hampshire Department of Environmental Services, Air Resources Division ("DES") has reviewed the stack test report for Androscoggin Valley Hospital's Wood-Fired Boiler, submitted on June 26, 2014. The report presents the data and results of the testing conducted on June 4, 2014 by Gammie Air Monitoring, LLC.

DES finds the report to be technically acceptable and agrees that the test results show the measured particulate emissions from the boiler to be 0.067 pounds per million British thermal units (lbs/MMBtu). The results comply with the limit specified in 40 CFR Part 63 and Androscoggin Valley Hospital's Temporary Permit TP-0127. They are also within the threshold for eligibility to participate in the proposed New Hampshire Public Utilities Commission Renewable Portfolio Standards.

If you have any questions, please contact Claude Planchet of the Compliance Bureau's Testing and Monitoring Section, at (603) 271-1376.

Sincerely,

Raymond Walters
Compliance Measurement and Data Programs Manager
Compliance Bureau
Air Resources Division

RAW/cbp
PS# 14-38
cc: Source File

# Attachment 3-1

Steam Meter Data Sheet

# Rosemount 8800D Series Vortex Flowmeter

***HART® AND FOUNDATION™ FIELDBUS PROTOCOLS***

- *Available with optional MultiVariable output and temperature compensated mass flow for saturated steam.*
- *Available in wafer, flanged, dual, reducer and high pressure designs.*
- *Available in Reducer™ Vortex which extends the measurable flow range, reduces installation costs, and minimizes project risk.*
- *All-welded, non-clog design eliminates ports and gaskets.*
- *Adaptive Digital Signal Processing (ADSP) provides vibration immunity and the ability to optimize the measurable flow range.*
- *With the unique isolated sensor design, the CriticalProcess™ Vortex allows for replacement without breaking the process seal.*
- *Simplified troubleshooting through device diagnostics and meter verification.*

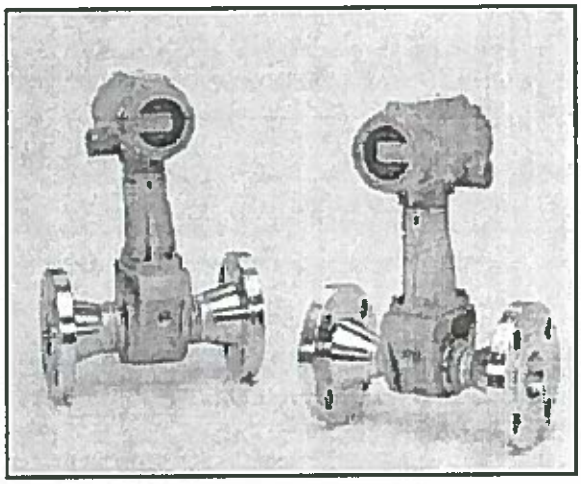

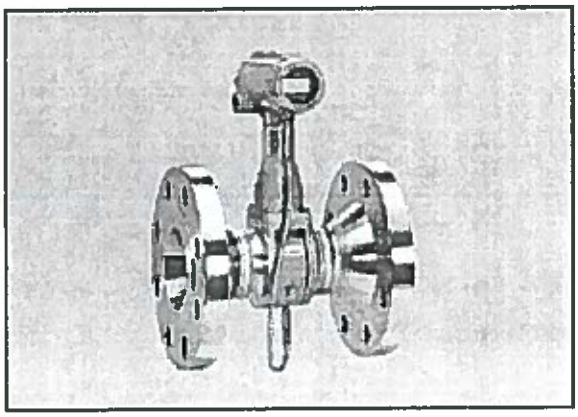

PART # 8800DR030SA1

## Contents

Specifications ..... page 6
Typical Flow Ranges ..... page 11
Product Certifications ..... page 22
Dimensional Drawings ..... page 28
Ordering Information ..... page 44

## THE ROSEMOUNT 8800D DELIVERS RELIABILITY

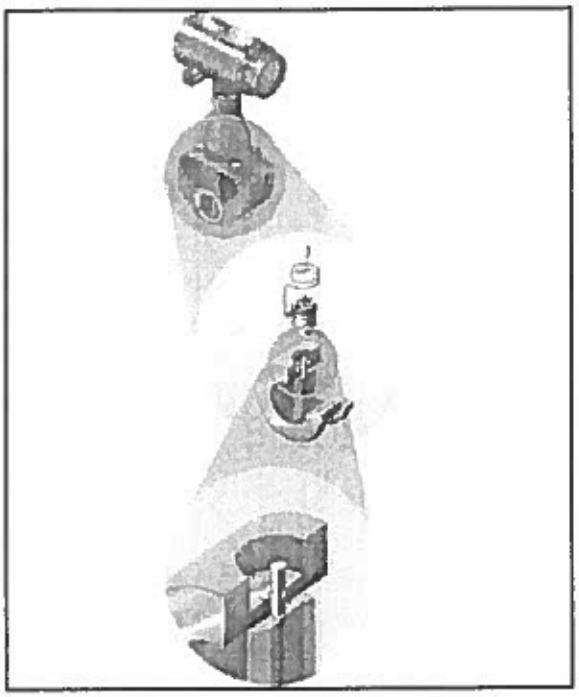

- **Rosemount Reliability** -The 8800D Vortex eliminates impulse lines, ports, and gaskets to improve reliability.
- **Non-clog Design** - Unique gasket-free construction which has no ports that can clog.
- **Vibration Immunity** - Mass Balancing of the sensor system, and Adaptive Digital Signal Processing (ADSP) provide Vibration immunity.
- **Replaceable Sensor** - The sensor is isolated from the process and can be replaced without breaking the process seals. All line sizes use the same sensor design allowing a single spare to serve every meter. The CriticalProcess Vortex enhances the ability to replace the sensor without shutting down the process.
- **Simplified Troubleshooting** - Device Diagnostics enable field verification of Meter Electronics and Sensor with no process shutdown.

## THE ROSEMOUNT 8800D OFFERING

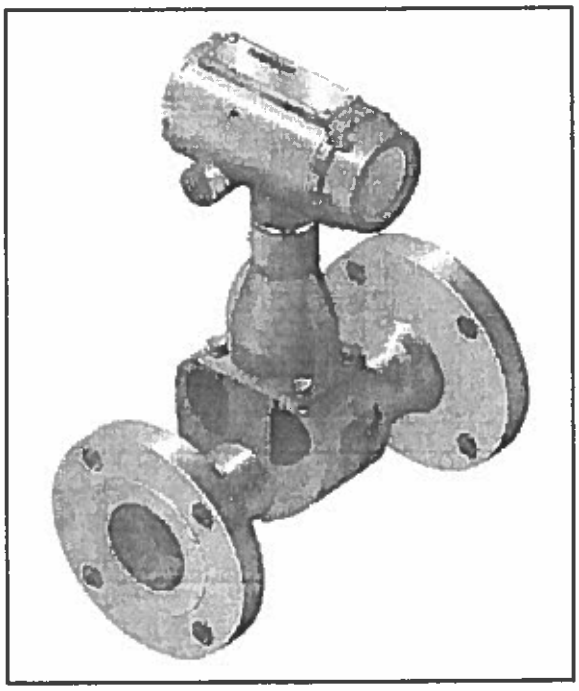

- The 8800D is available in wafer style meter bodies for ½ through 8-in. line sizes, and ASME B16.5 (ANSI), DIN, or JIS flanged style meter bodies for ½ through 12-in. line sizes.
- Alignment rings, provided with each wafer-style flowmeter, ensure that the meter body is properly centered with the adjacent piping.
- The wafer, flanged, and weld end style meter bodies are available in 316 stainless steel and nickel alloy materials of construction.
- Available up to ASME class 1500 for 1 through 8-in. (25 mm through 200 mm) and ASME class 900 for ½-in. (15 mm) through 8-in. (200 mm).
- Available with FOUNDATION fieldbus functionality which includes Device Diagnostics and PlantWeb Alerts.

## THE ROSEMOUNT 8800DR REDUCER VORTEX EXTENDS THE MEASURABLE FLOW RANGE AT A REDUCED COST

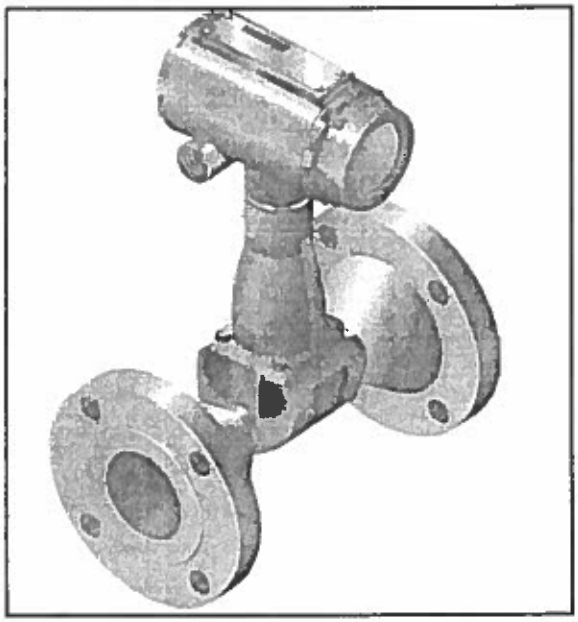

- **Rosemount Reliability** - Designed with same electronics, sensor, and meter body as the 8800D.
- **Reduced Cost** - Eliminates field assembly and welding of separate reducers and piping reducing installed cost by as much as 50%.
- **Extended Measurable Flow** - Low-end flow range is doubled with the Rosemount 8800DR Reducer Vortex.
- **Reduced Project Risk** - Reducer Vortex and the Standard Vortex have the same face-to-face dimension. As a result either meter can be used without affecting pipe layout.
- Available as flanged meter for 1 through 12-in. stainless steel and nickel alloy materials of construction.
- Available with FOUNDATION fieldbus functionality.

## THE DUAL-SENSOR VORTEX FLOWMETER

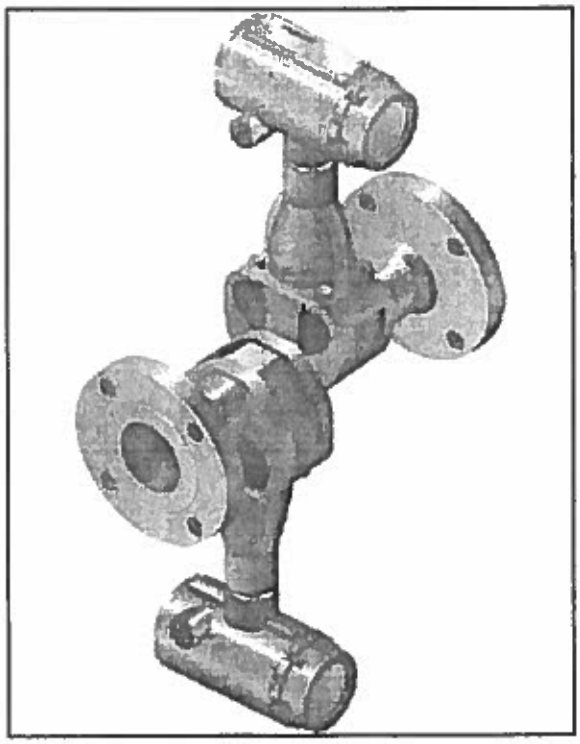

- **Safety Integrated Systems (SIS)** - Ideal solution where redundant flow signals are required.
- **Rosemount Reliability** - Designed with same electronics, sensor, and meter body as the 8800D.
- **Redundant Flow Measurement** - Dual Vortex meter is constructed of two complete vortex meters: sensor, electronics, and shedder bar[1]. The meters are welded together and flow calibrated to provide an accurate single flowmeter with two independent flow measurements.
- Available as flanged meter for ½ through 12-in. stainless steel and nickel alloy materials of construction.

*(1) All 6-in. (150 mm) through 12-in. (300 mm) dual style vortex meters have a single shedder bar.*

## 8800D MULTIVARIABLE VORTEX REDUCES INSTALLATION COSTS, SIMPLIFIES INSTALLATION, AND IMPROVES PERFORMANCE IN SATURATED STEAM

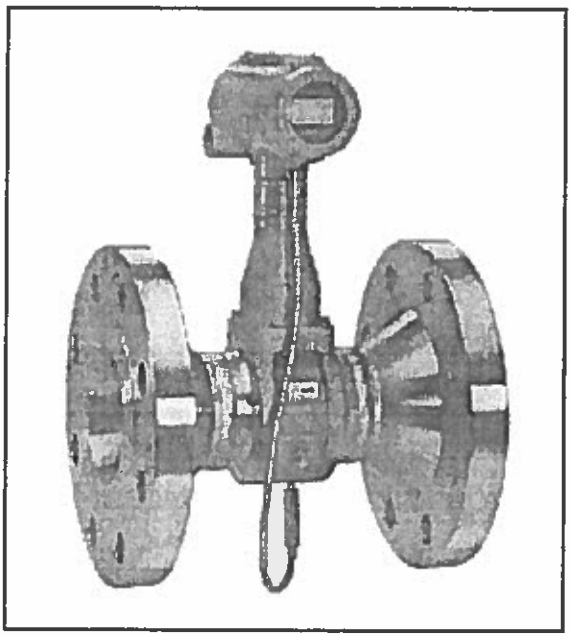

- **MultiVariable Vortex Design**
  Incorporates temperature sensor into the vortex meter using the shedder bar as a thermowell, which keeps the vortex and temperature sensors isolated from process for easy verification and replacement.
- **Temperature Compensated Capability for Saturated Steam**
  Calculates density from measured process temperature and uses the calculated density to provide a temperature compensated mass flow.
- **Increased performance in Saturated Steam**
  Performance in saturated steam is improved due to the fact that the electronics will be compensating for changes in the process temperature.
- **Reduces Installed Costs**
  MultiVariable Vortex eliminates the need for an external thermowell and temperature sensor.
- **Output Options**
  Can map independent variables to analog output, pulse output, or HART burst variables.
- **Available with Flow Computer for additional functionality**
  Integrate the MultiVariable Vortex with a pressure transmitter for full pressure and temperature compensation of superheated steam and various gases.
- **Remote Mount Electronics**
  Also available with remote mounted electronics up to 75 ft. (23 m).

When you integrate the MultiVariable Vortex with a Rosemount Flow Computer, you get:

- Remote Communications
- Heat Calculations
- Remote Totalization
- Peak Demand Calculation
- Datalogging Capabilities

*Please see Product Data Sheet 00813-0100-4005 for more information on the Rosemount Flow Computer.*

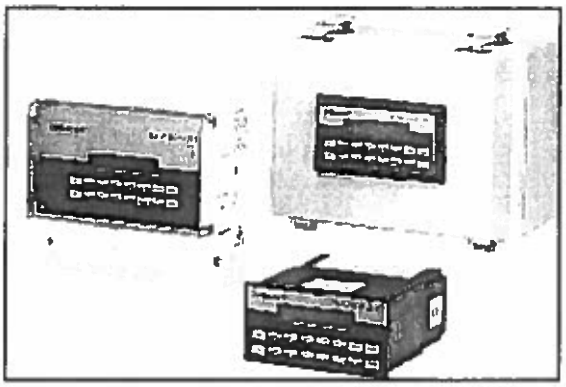

## ROSEMOUNT 8800D VORTEX FLOWMETER WITH FOUNDATION FIELDBUS

The software for the 8800D Flowmeter with FOUNDATION fieldbus permits remote testing and configuration using any FOUNDATION fieldbus-compliant host, such as the DeltaV system from Emerson Process Management.

### Transducer Block

The transducer block calculates flow from sensor frequency. The calculation includes information about damping, shedding frequency, K-factor, process fluid, pipe ID, and diagnostics.

### Resource Block

The resource block contains physical transmitter information, including available memory, manufacturer identification, device type, software tag, and unique identification.

### Backup Link Active Scheduler (LAS)

The transmitter is classified as a device link master. A device link master can function as a Link Active Scheduler (LAS) if the current link master device fails or is removed from the segment.

The host or other configuration tool is used to download the schedule for the application to the link master device. In the absence of a primary link master, the transmitter will claim the LAS and provide permanent control for the H1 segment.

### Diagnostics

The transmitter automatically performs continuous self-diagnostics. The user can perform on-line testing of the transmitter digital signal. Advanced simulation diagnostics are available. This enables remote verification of the electronics via a flow signal generator built into the electronics. The sensor strength value can be used to view the process flow signal and provide information regarding filter settings.

## FOUNDATION Fieldbus Function Blocks

#### Analog Input

The AI function block processes the measurement and makes it available to other function blocks. The AI function block also allows filtering, alarming, and engineering unit changes.

The 8800D Flowmeter with FOUNDATION fieldbus comes standard with three AI function blocks (1 block for flow, 1 block for signal strength, and one block for future use with the MTA option).

#### Proportional/Integral/Derivative

The optional PID function block provides a sophisticated implementation of the universal PID algorithm. The PID function block features input for feed forward control, alarms on the process variable, and control deviation. The PID type (series or Instrument Society of America [ISA]) is user-selectable on the derivative filter.

### Integrator

The standard integrator block is available for totalization of flow.

### Setup

Basic setup requires connecting the transmitter to a fieldbus network or Field Communicator. The FOUNDATION fieldbus-compliant host will automatically establish communication with the device.

The Rosemount 8800D Flowmeter can be easily configured using the DeltaV system.
User-configurable parameters include: tag, scaling and units, process fluid type, damping, fixed process density, pipe inside diameter (ID)[1], and fixed process temperature[1].

Tagging information can be entered into the transmitter to allow identification and a physical description. 32-character tags are provided for identification of the transmitter and each function block.

---

*(1) Process temperature and pipe ID have known effects on the K-factor. The 8800D software automatically accounts for these effects by compensating the K-factor.*

# Specifications

*The following specifications are for the Rosemount 8800D, Rosemount 8800DR, and Rosemount 8800DD, except where noted.*

## FUNCTIONAL SPECIFICATIONS

### Process Fluids

Liquid, gas, and steam applications. Fluids must be homogeneous and single-phase.

### Line Sizes

**Wafer**
½, 1, 1½, 2, 3, 4, 6, and 8 inches
(DN 15, 25, 40, 50, 80, 100, 150, and 200)

**Flanged and Dual-Sensor Style**
½, 1, 1½, 2, 3, 4, 6, 8, 10, and 12 inches
(DN 15, 25, 40, 50, 80, 100, 150, 200, 250, and 300)

**Reducer**
1, 1½, 2, 3, 4, 6, 8, 10, and 12 inches
(DN 25, 40, 50, 80, 100, 150, 200, 250, and 300)

### Pipe Schedules

Process piping Schedules 10, 40, 80, and 160.

**NOTE**
The appropriate bore diameter of the process piping must be entered using the Field Communicator or AMS Device Manager. Meters will be shipped from the factory at the Schedule 40 default value unless otherwise specified.

### Measurable Flow Rates

Capable of processing signals from flow applications which meet the sizing requirements below.

To determine the appropriate flowmeter size for an application, process conditions must be within the Reynolds number and velocity limitations for the desired line size provided in Table 1, Table 2, and Table 3.

**NOTE**
Consult your local sales representative to obtain a computer sizing program that describes in greater detail how to specify the correct flowmeter size for an application.

*The Reynolds number equation shown below combines the effects of density (ρ), viscosity ($\mu_{cp}$), pipe inside diameter (D), and flow velocity (V).*

$$R_D = \frac{VD\rho}{\mu_{cp}}$$

Table 1. Minimum Measurable Meter Reynolds Numbers

| Meter Sizes (Inches / DN) | Reynolds Number Limitations |
|---|---|
| ½ through 4/15 through 100 | 5000 minimum |
| 6 through 12/150 through 300 | |

Table 2. Minimum Measurable Meter Velocities(1)

| | Feet per Second | Meters per Second |
|---|---|---|
| Liquids(2) | $\sqrt{36/\rho}$ | $\sqrt{54/\rho}$ |
| Gases(2) | $\sqrt{36/\rho}$ | $\sqrt{54/\rho}$ |
| **The ρ is the process fluid density at flowing conditions in lb/ft³ for ft/s and kg/m³ for m/s** | | |

*(1) Velocities are referenced to schedule 40 pipe.*

*(2) This minimum measurable meter velocity is based on default filter settings.*

Table 3. Maximum Measurable Meter Velocities(1)
(Use the smaller of the two values)

| | Feet per Second | Meters per Second |
|---|---|---|
| Liquids | $\sqrt{90{,}000/\rho}$ or 25 | $\sqrt{134{,}000/\rho}$ or 7.6 |
| Gases(2) | $\sqrt{90{,}000/\rho}$ or 250 | $\sqrt{134{,}000/\rho}$ or 76 |
| **The ρ is the process fluid density at flowing conditions in lb/ft³ for ft/s and kg/m³ for m/s** | | |

*(1) Velocities are referenced to schedule 40 pipe.*

*(2) Accuracy limitations for gas and steam for Dual-style meters (½-in. to 4-in.): max velocity of 100 ft/s (30.5 m/s).*

### Process Temperature Limits

**Standard**
–40 to 450 °F (–40 to 232 °C)

**Extended**
–330 to 800 °F (–200 to 427 °C)

**MultiVariable (MTA option)**

–40 to 800 °F (–40 to 427 °C)

- Use above 450 °F (232 °C) requires Extended Sensor

### Output Signals

**4–20 mA Digital HART Signal**
Superimposed on 4–20 mA signal

**Optional Scalable Pulse Output**
0 to 10000 Hz; transistor switch closure with adjustable scaling via HART communications; capable of switching up to 30 Vdc, 120 mA maximum

**Digital FOUNDATION fieldbus signal**
Completely digital output with FOUNDATION fieldbus communication (ITK 5.1 compliant).

### Analog Output Adjustment

Engineering units and lower and upper range values are user-selected. Output is automatically scaled to provide 4 mA at the selected lower range value, 20 mA at the selected upper range value. No frequency input is required to adjust the range values.

### Scalable Frequency Adjustment

The scalable pulse output can be set to a specific velocity, volume, or mass (i.e. 1 pulse = 1 lb). The scalable pulse output can also be scaled to a specific rate of volume, mass, or velocity (i.e. 100 Hz = 500 lb/hr).

### Ambient Temperature Limits

**Operating**
–58 to 185 °F (–50 to 85 °C)
–4 to 185 °F (–20 to 85 °C) for flowmeters with local indicator

**Storage**
–58 to 250 °F (–50 to 121 °C)
–50 to 185 °F (–46 to 85 °C) for flowmeters with local indicator

### Pressure Limits

**Flange Style Meter**
Rated for ASME B16.5 (ANSI) Class 150, 300, 600, 900, and 1500, DIN PN 10, 16, 25, 40, 64, 100, and 160, and JIS 10K, 20K, and 40K

**Reducer Style Meter**
Rated for ASME B16.5 (ANSI) Class 150, 300, 600, and 900, DIN PN 10, 16, 25, 40, 64, 100, and 160.

**Dual Sensor Style Meter**
Rated for ASME B16.5 (ANSI) Class 150, 300, 600, 900, and 1500, DIN PN 10, 16, 25, 40, 64, 100, and 160, and JIS 10K, 20K, and 40K

**Wafer Style Meter**
Rated for ASME B16.5 (ANSI) Class 150, 300, and 600, DIN PN 10, 16, 25, 40, 64, and 100, and JIS 10K, 20K, and 40K

**NOTE:**
All Wafer Style Meters are pressure rated and labeled at 1500 PSI / 10.34 MPa at 100 °F / 38 °C regardless of Alignment Ring Size code ordered.

**Weld-End Style Meter**
W1 Welds to Schedule 10 mating pipe
Max Working Pressure 720 psig (4.96 MPa-g)

W4 Welds to Schedule 40 mating pipe
Max Working Pressure 1440 psig (9.93 MPa-g)

W8 Welds to Schedule 80 mating pipe
Max Working Pressure 2160 psig (14.9 MPa-g)

W9 Welds to Schedule 160 mating pipe
Max Working Pressure 3600 psig (24.8 Mpa-g)

**NOTE:**
1-in. (25 mm), and 1.5-in. (40 mm) weld to Schedule 80 mating pipe

### Power Supply

**HART Analog**
External power supply required. Flowmeter operates on 10.8 to 42 Vdc terminal voltage (with 250-ohm minimum load required for HART communications, 16.8 Vdc power supply is required)

**FOUNDATION fieldbus**
External power supply required. Flowmeter operates on 9 to 32 Vdc, 18 mA maximum.

### Power Consumption

One watt maximum

### Load Limitations (HART Analog)

Maximum loop resistance is determined by the voltage level of the external power supply, as described by:

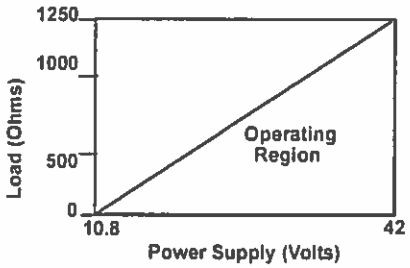


$R_{max}$ = $41.7(V_{ps} - 10.8)$
$V_{ps}$ = Power Supply Voltage (Volts)
$R_{max}$ = Maximum Loop Resistance (Ohms)

**NOTE**
HART Communication requires a minimum loop resistance of 250 ohms.

### Optional LCD Indicator

The optional LCD indicator is capable of displaying:

- Primary Variable
- Velocity Flow
- Volumetric Flow
- Mass Flow
- Percent of Range
- Analog Output (if applicable)
- Totalizer (Output Code "D" and "P" Only)
- Shedding Frequency
- Pulse Output Frequency (if applicable)
- Electronics Temperature (Output Code "D" and "P" Only)
- Process Temperature (MTA Option Only)
- Calculated Process Density (MTA Option Only)

If more than one item is selected, the display will scroll through all items selected.

### Enclosure Rating

FM Type 4X; CSA Type 4X; IP66

### Permanent Pressure Loss

The approximate permanent pressure loss (PPL) from the Rosemount 8800D flowmeter is calculated for each application in the Vortex sizing software available from your local Rosemount representative. The PPL is determined using the equation:

$$PPL = \frac{A \times \rho_f \times Q^2}{D^4}$$

where:

PPL = Permanent Pressure loss (psi or kPa)

Where:

$\rho_f$ = Density at operating conditions (lb/ft$^3$ or kg/m$^3$)

$Q$ = Actual volumetric flow rate (Gas = ft$^3$/min or m$^3$/hr; Liquid = gal/min or l/min)

$D$ = Flowmeter bore diameter (in. or mm)

$A$ = Constant depending on meter style, fluid type and flow units. Determined per following table:

Table 4. Determining the PPL

| | English Units | | SI Units | |
|---|---|---|---|---|
| Meter Style | $A_{Liquid}$ | $A_{Gas}$ | $A_{Liquid}$ | $A_{Gas}$ |
| 8800DF/W | $3.4 \times 10^{-5}$ | $1.9 \times 10^{-3}$ | 0.425 | 118 |
| 8800DR | $3.91 \times 10^{-5}$ | $2.19 \times 10^{-3}$ | 0.489 | 136 |
| 8800DD(1) | $6.12 \times 10^{-5}$ | $3.42 \times 10^{-3}$ | 0.765 | 212 |

*(1) For all 6-in. thru 12-in. line sizes A is the same for 8800DD and 8800DF*

### Minimum Upstream Pressure (Liquids)

Flow metering conditions that would allow cavitation, the release of vapor from a liquid, should be avoided. This flow condition can be avoided by remaining within the proper flow range of the meter and by following appropriate system design.

For some liquid applications, incorporation of a back pressure valve should be considered. To prevent cavitation, the minimum upstream pressure should be:

$P = 2.9*\Delta P + 1.3*p_v$ or $P = 2.9*\Delta P + p_v + 0.5$ psia (3.45 kPa) (use the smaller of the two results)

P = Line pressure five pipe diameters downstream of the meter (psia or kPa abs)

$\Delta P$ = Pressure loss across the meter (psi or kPa)

$p_v$ = Liquid vapor pressure at operating conditions (psia or kPa abs)

### Failure Mode Alarm

**HART Analog**
If self-diagnostics detect a gross flowmeter failure, the analog signal will be driven to the values below:

| | |
|---|---|
| Low | 3.75 |
| High | 22.6 |
| NAMUR Low | 3.60 |
| NAMUR High | 22.6 |

High or low alarm signal is user-selectable through the fail mode alarm jumper on the electronics. NAMUR-compliant alarm limits are available through the C4 or CN Option. Alarm type is field configurable also.

**FOUNDATION fieldbus**
The AI block allows the user to configure the alarm to HI-HI, HI, LO, or LO-LO with a variety of priority levels.

### Saturation Output Values

When the operating flow is outside the range points, the analog output continues to track the operating flow until reaching the saturation value listed below; the output does not exceed the listed saturation value regardless of the operating flow. The NAMUR-Compliant Saturation Values are available through the C4 or CN option. Saturation type is field configurable.

| | |
|---|---|
| Low | 3.9 |
| High | 20.8 |
| NAMUR Low | 3.8 |
| NAMUR High | 20.5 |

### Damping

Flow Damping adjustable between 0.2 and 255 seconds.

Process Temperature Damping adjustable between 0.4 and 32.0 seconds (MTA Option Only).

### Response Time

Three vortex shedding cycles or 300 ms, whichever is greater, maximum required to reach 63.2% of actual input with the minimum damping (0.2 seconds).

### Turn-on Time

**HART Analog**
Less than four (4) seconds plus the response time to rated accuracy from power up (less than 7 seconds with the MTA Option).

**FOUNDATION fieldbus**
Performance within specifications no greater than 10.0 seconds after power is applied.

### Transient Protection

The optional transient terminal block prevents damage to the flowmeter from transients induced by lightning, welding, heavy electrical equipment, or switch gears. The transient protection electronics are located in the terminal block.

The transient terminal block meets the following specifications:
ASME B16.5 (ANSI)/IEEE C62.41 - 1980
(IEEE 587) Categories A, B
3 kA crest (8 × 20 µs)
6 kV crest (1.2 × 50 µs)
6 kV/0.5 kA (0.5 µs, 100 kHz, ring wave)

### Security Lockout

When the security lockout jumper is enabled, the electronics will not allow you to modify parameters that affect flowmeter output.

### Output Testing

**Current Source**
Flowmeter may be commanded to set the current to a specified value between 4 and 20 mA.

**Frequency Source**
Flowmeter may be commanded to set the frequency to a specified value between 0 and 10000 Hz.

### Low Flow Cutoff

Adjustable over entire flow range. Below selected value, output is driven to 4 mA and zero pulse output frequency.

### Humidity Limits

Operates in 0–95% relative humidity under noncondensing conditions (tested to IEC 60770, Section 6.2.11).

### Overrange Capability

**HART Analog**
Analog signal output continues to 105 percent of span, then remains constant with increasing flow. The digital and pulse outputs will continue to indicate flow up to the upper sensor limit of the flowmeter and a maximum pulse output frequency of 10400 Hz.

**FOUNDATION fieldbus**
For liquid process fluid type, the transducer block digital output will continue to a nominal value of 25 ft/s. After that, the status associated with the transducer block output will go to UNCERTAIN. Above a nominal value of 30 ft/s, the status will go to BAD.

For gas/steam service, the transducer block digital output will continue to a nominal value of 220 ft/s for 0.5 and 1.0-in. line sizes and a nominal value of 250 ft/s for 1.5–12-in. line sizes. After that, the status associated with the transducer block output will go to UNCERTAIN. Above a nominal value of 300 ft/s for all line sizes, the status will go to BAD.

### Flow Calibration

Meter bodies are flow-calibrated and assigned a unique calibration factor (K-factor) at the factory. The calibration factor is entered into the electronics, enabling interchangeability of electronics and/or sensors without calculations or compromise in accuracy of the calibrated meter body.

### Status (FOUNDATION fieldbus only)

If self-diagnostics detect a transmitter failure, the status of the measurement will inform the control system. Status may also set the PID output to a safe value.

### Schedule Entries (FOUNDATION fieldbus only)

Six (6)

### Links (FOUNDATION fieldbus only)

Twelve (12)

### Virtual Communications Relationships (VCRs) (FOUNDATION fieldbus only)

Two (2) predefined (F6, F7)
Four (4) configured (see Table 5)

Table 5. Block Information

| Block | Base Index | Execution Time (Milliseconds) |
|---|---|---|
| Resource (RB) | 300 | — |
| Transducer (TB) | 400 | — |
| Analog Input (AI) | 1,000 | 20 |
| Proportional/ Integral/Derivative (PID) | 10,000 | 30 |
| Integrator (INT) | 12,000 | 20 |

# Typical Flow Ranges

Table 6 - Table 12 show typical flow ranges for some common process fluids with default filter settings. Consult your local sales representative to obtain a computer sizing program that describes in greater detail the flow range for an application.

Table 6. Typical pipe velocity ranges for 8800D and 8800DR(1)

| Process Line Size | | Liquid Velocity Ranges | | Gas Velocity Ranges | |
|---|---|---|---|---|---|
| (Inches/ DN) | Vortex Meter (2) | (ft/s) | (m/s) | (ft/s) | (m/s) |
| 0.5/ 15 | 8800DF005 | 0.70 to 25.0 | 0.21 to 7.6 | 6.50 to 250.0 | 1.98 to 76.2 |
| 1/ 25 | 8800DF010 | 0.70 to 25.0 | 0.21 to 7.6 | 6.50 to 250.0 | 1.98 to 76.2 |
| | 8800DR010 | 0.25 to 8.8 | 0.08 to 2.7 | 2.29 to 87.9 | 0.70 to 26.8 |
| 1.5/ 40 | 8800DF015 | 0.70 to 25.0 | 0.21 to 7.6 | 6.50 to 250.0 | 1.98 to 76.2 |
| | 8800DR015 | 0.30 to 10.6 | 0.09 to 3.2 | 2.76 to 106.1 | 0.84 to 32.3 |
| 2/ 50 | 8800DF020 | 0.70 to 25.0 | 0.21 to 7.6 | 6.50 to 250.0 | 1.98 to 76.2 |
| | 8800DR020 | 0.42 to 15.2 | 0.13 to 4.6 | 3.94 to 151.7 | 1.20 to 46.2 |
| 3/ 80 | 8800DF030 | 0.70 to 25.0 | 0.21 to 7.6 | 6.50 to 250.0 | 1.98 to 76.2 |
| | 8800DR030 | 0.32 to 11.3 | 0.10 to 3.5 | 2.95 to 113.5 | 0.90 to 34.6 |
| 4/ 100 | 8800DF040 | 0.70 to 25.0 | 0.21 to 7.6 | 6.50 to 250.0 | 1.98 to 76.2 |
| | 8800DR040 | 0.41 to 14.5 | 0.12 to 4.4 | 3.77 to 145.2 | 1.15 to 44.3 |
| 6/ 150 | 8800DF060 | 0.70 to 25.0 | 0.21 to 7.6 | 6.50 to 250.0 | 1.98 to 76.2 |
| | 8800DR060 | 0.31 to 11.0 | 0.09 to 3.4 | 2.86 to 110.2 | 0.87 to 33.6 |
| 8/ 200 | 8800DF080 | 0.70 to 25.0 | 0.21 to 7.6 | 6.50 to 250.0 | 1.98 to 76.2 |
| | 8800DR080 | 0.40 to 14.4 | 0.12 to 4.4 | 3.75 to 144.4 | 1.14 to 44.0 |
| 10/ 250 | 8800DF100 | 0.90 to 25.0 | 0.27 to 7.6 | 6.50 to 250.0 | 1.98 to 76.2 |
| | 8800DR100 | 0.44 to 15.9 | 0.13 to 4.8 | 4.12 to 158.6 | 1.26 to 48.3 |
| 12/ 300 | 8800DF120 | 1.10 to 25.0 | 0.34 to 7.6 | 6.50 to 250.0 | 1.98 to 76.2 |
| | 8800DR120 | 0.63 to 17.6 | 0.19 to 5.4 | 4.58 to 176.1 | 1.40 to 53.7 |

*(1) Table 6 is a reference of pipe velocities that can be measured for the standard Rosemount 8800D and the reducer Rosemount 8800DR Vortex Meters. It does not consider density limitations, as described in tables 2 and 3. Velocities are referenced in schedule 40 pipe.*

*(2) Velocity range of the Rosemount 8800DW is the same as Rosemount 8800DF.*

Table 7. Water Flow Rate Limits for the Rosemount 8800D and 8800DR(1)

| Process Line Size (Inches/ DN) | Vortex Meter (2) | Minimum and Maximum Measurable Water Flow Rates* Gallons/Minute | Cubic Meters/Hour |
|---|---|---|---|
| 0.5/ 15 | 8800DF005 | 1.76 to 23.7 | 0.40 to 5.4 |
| 1/ 25 | 8800DF010 | 2.96 to 67.3 | 0.67 to 15.3 |
| | 8800DR010 | 1.76 to 23.7 | 0.40 to 5.4 |
| 1.5/ 40 | 8800DF015 | 4.83 to 158 | 1.10 to 35.9 |
| | 8800DR015 | 2.96 to 67.3 | 0.67 to 15.3 |
| 2/ 50 | 8800DF020 | 7.96 to 261 | 1.81 to 59.4 |
| | 8800DR020 | 4.83 to 158.0 | 1.10 to 35.9 |
| 3/ 80 | 8800DF030 | 17.5 to 576 | 4.00 to 130 |
| | 8800DR030 | 7.96 to 261.0 | 1.81 to 59.3 |
| 4/ 100 | 8800DF040 | 30.2 to 992 | 6.86 to 225 |
| | 8800DR040 | 17.5 to 576 | 4.00 to 130 |
| 6/ 150 | 8800DF060 | 68.5 to 2251 | 15.6 to 511 |
| | 8800DR060 | 30.2 to 992 | 6.86 to 225 |
| 8/ 200 | 8800DF080 | 119 to 3898 | 27.0 to 885 |
| | 8800DR080 | 68.5 to 2251 | 15.6 to 511 |
| 10/ 250 | 8800DF100 | 231 to 6144 | 52.2 to 1395 |
| | 8800DR100 | 119 to 3898 | 27.0 to 885 |
| 12/ 300 | 8800DF120 | 391 to 8813 | 88.8 to 2002 |
| | 8800DR120 | 231 to 6144 | 52.2 to 1395 |

***Conditions: 77 °F (25 °C) and 14.7 psia (1.01 bar absolute)**

*(1) Table 7 is a reference of flow rates that can be measured for the standard Rosemount 8800D and the reducer 8800DR Vortex Meters. It does not consider density limitations, as described in tables 2 and 3.*

*(2) Velocity range of the 8800DW is the same as 8800DF.*

Table 8. Air Flow Rate Limits at 59 °F (15 °C)

| Process Pressure | Flow Rate Limits | Minimum and Maximum Air Flow Rates for line sizes 1/2-in./DN 15 through 1-in./DN 25 | | | | | | | |
|---|---|---|---|---|---|---|---|---|---|
| | | 1/2-in./DN 15 | | | | 1-in./DN 25 | | | |
| | | Rosemount 8800D | | Rosemount 8800DR | | Rosemount 8800D | | Rosemount 8800DR | |
| | | ACFM | ACMH | ACFM | ACMH | ACFM | ACMH | ACFM | ACMH |
| 0 psig (0 bar G) | max | 27.9 | 47.3 | Not Available | Not Available | 79.2 | 134 | 27.9 | 47.3 |
| | min | 3.86 | 6.56 | | | 7.81 | 13.3 | 3.86 | 6.56 |
| 50 psig (3,45 bar G) | max | 27.9 | 47.3 | Not Available | Not Available | 79.2 | 134 | 27.9 | 47.3 |
| | min | 1.31 | 2.22 | | | 3.72 | 6.32 | 1.31 | 2.22 |
| 100 psig (6,89 bar G) | max | 27.9 | 47.3 | Not Available | Not Available | 79.2 | 134 | 27.9 | 47.3 |
| | min | 0.98 | 1.66 | | | 2.80 | 4.75 | 0.98 | 1.66 |
| 150 psig (10,3 bar G) | max | 27.9 | 47.3 | Not Available | Not Available | 79.2 | 134 | 27.9 | 47.3 |
| | min | 0.82 | 1.41 | | | 2.34 | 3.98 | 0.82 | 1.41 |
| 200 psig (13,8 bar G) | max | 27.9 | 47.3 | Not Available | Not Available | 79.2 | 134 | 27.9 | 47.3 |
| | min | 0.82 | 1.41 | | | 2.34 | 3.98 | 0.82 | 1.41 |
| 300 psig (20,7 bar G) | max | 27.9 | 47.3 | Not Available | Not Available | 79.2 | 134 | 27.9 | 47.3 |
| | min | 0.82 | 1.41 | | | 2.34 | 3.98 | 0.82 | 1.41 |
| 400 psig (27,6 bar G) | max | 25.7 | 43.9 | Not Available | Not Available | 73.0 | 124 | 25.7 | 43.9 |
| | min | 0.82 | 1.41 | | | 2.34 | 3.98 | 0.82 | 1.41 |
| 500 psig (34,5 bar G) | max | 23.0 | 39.4 | Not Available | Not Available | 66.0 | 112 | 23.0 | 39.4 |
| | min | 0.82 | 1.41 | | | 2.34 | 3.98 | 0.82 | 1.41 |

Table 9. Air Flow Rate Limits at 59 °F (15 °C)

| Process Pressure | Flow Rate Limits | Minimum and Maximum Air Flow Rates for line sizes 1½-in./DN 40 through 2-in./DN 50 | | | | | | | |
|---|---|---|---|---|---|---|---|---|---|
| | | 1½-in./DN 40 | | | | 2-in./DN 50 | | | |
| | | Rosemount 8800D | | Rosemount 8800DR | | Rosemount 8800D | | Rosemount 8800DR | |
| | | ACFM | ACMH | ACFM | ACMH | ACFM | ACMH | ACFM | ACMH |
| 0 psig | max | 212 | 360 | 79.2 | 134 | 349 | 593 | 212 | 360 |
| (0 bar G) | min | 18.4 | 31.2 | 7.81 | 13.3 | 30.3 | 51.5 | 18.4 | 31.2 |
| 50 psig | max | 212 | 360 | 79.2 | 134 | 349 | 593 | 212 | 360 |
| (3,45 bar G) | min | 8.76 | 14.9 | 3.72 | 6.32 | 14.5 | 24.6 | 8.76 | 14.9 |
| 100 psig | max | 212 | 360 | 79.2 | 134 | 349 | 593 | 212 | 360 |
| (6,89 bar G) | min | 6.58 | 11.2 | 2.80 | 4.75 | 10.8 | 18.3 | 6.58 | 11.2 |
| 150 psig | max | 212 | 360 | 79.2 | 134 | 349 | 593 | 212 | 360 |
| (10,3 bar G) | min | 5.51 | 9.36 | 2.34 | 3.98 | 9.09 | 15.4 | 5.51 | 9.36 |
| 200 psig | max | 212 | 360 | 79.2 | 134 | 349 | 593 | 212 | 360 |
| (13,8 bar G) | min | 5.51 | 9.36 | 2.34 | 3.98 | 9.09 | 15.4 | 5.51 | 9.36 |
| 300 psig | max | 198 | 337 | 79.2 | 134 | 326 | 554 | 198 | 337 |
| (20,7 bar G) | min | 5.51 | 9.36 | 2.34 | 3.98 | 9.09 | 15.4 | 5.51 | 9.36 |
| 400 psig | max | 172 | 293 | 73.0 | 124 | 284 | 483 | 172 | 293 |
| (27,6 bar G) | min | 5.51 | 9.36 | 2.34 | 3.98 | 9.09 | 15.4 | 5.51 | 9.36 |
| 500 psig | max | 154 | 262 | 66.0 | 112 | 254 | 432 | 154 | 262 |
| (34,5 bar G) | min | 5.51 | 9.36 | 2.34 | 3.98 | 9.09 | 15.4 | 5.51 | 9.36 |

Table 10. Air Flow Rate Limits at 59 °F (15 °C)

| Process Pressure | Flow Rate Limits | Minimum and Maximum Air Flow Rates for line sizes 3-in./DN 80 through 4-in./DN 100 | | | | | | | |
|---|---|---|---|---|---|---|---|---|---|
| | | 3-in./DN 80 | | | | 4-in./DN 100 | | | |
| | | Rosemount 8800D | | Rosemount 8800DR | | Rosemount 8800D | | Rosemount 8800DR | |
| | | ACFM | ACMH | ACFM | ACMH | ACFM | ACMH | ACFM | ACMH |
| 0 psig | max | 770 | 1308 | 349 | 593 | 1326 | 2253 | 770 | 1308 |
| (0 bar G) | min | 66.8 | 114 | 30.3 | 51.5 | 115 | 195 | 66.8 | 114 |
| 50 psig | max | 770 | 1308 | 349 | 593 | 1326 | 2253 | 770 | 1308 |
| (3,45 bar G) | min | 31.8 | 54.1 | 14.5 | 24.6 | 54.8 | 93.2 | 31.8 | 54.1 |
| 100 psig | max | 770 | 1308 | 349 | 593 | 1326 | 2253 | 770 | 1308 |
| (6,89 bar G) | min | 23.9 | 40.6 | 10.8 | 18.3 | 41.1 | 69.8 | 23.9 | 40.6 |
| 150 psig | max | 770 | 1308 | 349 | 593 | 1326 | 2253 | 770 | 1308 |
| (10,3 bar G) | min | 20.0 | 34.0 | 9.09 | 15.4 | 34.5 | 58.6 | 20.0 | 34.0 |
| 200 psig | max | 770 | 1308 | 349 | 593 | 1326 | 2253 | 770 | 1308 |
| (13,8 bar G) | min | 20.0 | 34.0 | 9.09 | 15.4 | 34.5 | 58.6 | 20.0 | 34.0 |
| 300 psig | max | 718 | 1220 | 326 | 554 | 1237 | 2102 | 718 | 1220 |
| (20,7 bar G) | min | 20.0 | 34.0 | 9.09 | 15.4 | 34.5 | 58.6 | 20.0 | 34.0 |
| 400 psig | max | 625 | 1062 | 284 | 483 | 1076 | 1828 | 625 | 1062 |
| (27,6 bar G) | min | 20.0 | 34.0 | 9.09 | 15.4 | 34.5 | 58.6 | 20.0 | 34.0 |
| 500 psig | max | 560 | 951 | 254 | 432 | 964 | 1638 | 560 | 951 |
| (34,5 bar G) | min | 20.0 | 34.0 | 9.09 | 15.4 | 34.5 | 58.6 | 20.0 | 34.0 |

Table 11. Air Flow Rate Limits at 59 °F (15 °C)

| Process Pressure | Flow Rate Limits | Minimum and Maximum Air Flow Rates for line sizes 6-in./DN 150 through 8-in./DN 200 | | | | | | | |
|---|---|---|---|---|---|---|---|---|---|
| | | 6-in./DN 150 | | | | 8-in./DN 200 | | | |
| | | Rosemount 8800D | | Rosemount 8800DR | | Rosemount 8800D | | Rosemount 8800DR | |
| | | ACFM | ACMH | ACFM | ACMH | ACFM | ACMH | ACFM | ACMH |
| 0 psig | max | 3009 | 5112 | 1326 | 2253 | 5211 | 8853 | 3009 | 5112 |
| (0 bar G) | min | 261 | 443 | 115 | 195 | 452 | 768 | 261 | 443 |
| 50 psig | max | 3009 | 5112 | 1326 | 2253 | 5211 | 8853 | 3009 | 5112 |
| (3,45 bar G) | min | 124 | 211 | 54.8 | 93.2 | 215 | 365 | 124 | 211 |
| 100 psig | max | 3009 | 5112 | 1326 | 2253 | 5211 | 8853 | 3009 | 5112 |
| (6,89 bar G) | min | 93.3 | 159 | 41.1 | 69.8 | 162 | 276 | 93.3 | 159 |
| 150 psig | max | 3009 | 5112 | 1326 | 2253 | 5211 | 8853 | 3009 | 5112 |
| (10,3 bar G) | min | 78.2 | 133 | 34.5 | 58.6 | 135 | 229 | 78.2 | 133 |
| 200 psig | max | 3009 | 5112 | 1326 | 2253 | 5211 | 8853 | 3009 | 5112 |
| (13,8 bar G) | min | 78.2 | 133 | 34.5 | 58.6 | 135 | 229 | 78.2 | 133 |
| 300 psig | max | 2807 | 4769 | 1237 | 2102 | 4862 | 8260 | 2807 | 4769 |
| (20,7 bar G) | min | 78.2 | 133 | 34.5 | 58.6 | 135 | 229 | 78.2 | 133 |
| 400 psig | max | 2442 | 4149 | 1076 | 1828 | 4228 | 7183 | 2442 | 4149 |
| (27,6 bar G) | min | 78.2 | 133 | 34.5 | 58.6 | 136 | 229 | 78.2 | 133 |
| 500 psig | max | 2188 | 3717 | 964 | 1638 | 3789 | 6437 | 2188 | 3717 |
| (34,5 bar G) | min | 78.2 | 133 | 34.5 | 58.6 | 136 | 229 | 78.2 | 133 |

Table 12. Air Flow Rate Limits at 59 °F (15 °C)

| Process Pressure | Flow Rate Limits | Minimum and Maximum Air Flow Rates for line sizes 10-in./DN 250 through 12-in./DN 300 | | | | | | | |
|---|---|---|---|---|---|---|---|---|---|
| | | 10-in./DN 250 | | | | 12-in./DN 300 | | | |
| | | Rosemount 8800D | | Rosemount 8800DR | | Rosemount 8800D | | Rosemount 8800DR | |
| | | ACFM | ACMH | ACFM | ACMH | ACFM | ACMH | ACFM | ACMH |
| 0 psig | max | 8214 | 13956 | 5211 | 8853 | 11781 | 20016 | 8214 | 13956 |
| (0 bar G) | min | 712.9 | 1211 | 452 | 768 | 1022 | 1736 | 712.9 | 1211 |
| 50 psig | max | 8214 | 13956 | 5211 | 8853 | 11781 | 20016 | 8214 | 13956 |
| (3,45 bar G) | min | 339.5 | 577 | 215 | 365 | 486.9 | 827 | 339.5 | 577 |
| 100 psig | max | 8214 | 13956 | 5211 | 8853 | 11781 | 20016 | 8214 | 13956 |
| (6,89 bar G) | min | 254.7 | 433 | 162 | 276 | 365.4 | 621 | 254.7 | 433 |
| 150 psig | max | 8214 | 13956 | 5211 | 8853 | 11781 | 20016 | 8214 | 13956 |
| (10,3 bar G) | min | 213.6 | 363 | 135 | 229 | 306.3 | 520 | 213.6 | 363 |
| 200 psig | max | 8214 | 13956 | 5211 | 8853 | 11781 | 20016 | 8214 | 13956 |
| (13,8 bar G) | min | 213.6 | 363 | 135 | 229 | 306.3 | 520 | 213.6 | 363 |
| 300 psig | max | 7664 | 13021 | 4862 | 8260 | 10992 | 18675 | 7664 | 13021 |
| (20,7 bar G) | min | 213.6 | 363 | 135 | 229 | 306.3 | 520 | 213.6 | 363 |
| 400 psig | max | 6664 | 11322 | 4228 | 7183 | 9559 | 16241 | 6664 | 11322 |
| (27,6 bar G) | min | 213.6 | 363 | 136 | 229 | 306.3 | 520 | 213.6 | 363 |
| 500 psig | max | 5972 | 10146 | 3789 | 6437 | 8565 | 14552 | 5972 | 10146 |
| (34,5 bar G) | min | 213.6 | 363 | 136 | 229 | 306.3 | 520 | 213.6 | 363 |

**NOTES**

The Rosemount 8800D measures the volumetric flow under operating conditions (i.e. the actual volume at the operating pressure and temperature–acfm or acmh), as shown above. However, gas volumes are strongly dependent on pressure and temperature. Therefore, gas quantities are typically stated in standard or normal conditions (e.g. SCFM or NCMH). (Standard conditions are typically 59 °F and 14.7 psia. Normal conditions are typically 0 °C and 1 bar abs.)

The flow rate limits in standard conditions are found using the equations below:

Standard Flow Rate = Actual Flow Rate X Density Ratio

Density Ratio = Density at Actual (Operating) Conditions / Density at Standard Conditions

Table 13. Saturated Steam Flow Rate Limits (Assumes Steam Quality is 100%)

| Process Pressure | Flow Rate Limits | Minimum and Maximum Saturated Steam Flow Rates for line sizes 1/2-in./DN 15 through 1-in./DN 25 | | | | | | | |
|---|---|---|---|---|---|---|---|---|---|
| | | ½-in./DN 15 | | | | 1-in./DN 25 | | | |
| | | Rosemount 8800D | | Rosemount 8800DR | | Rosemount 8800D | | Rosemount 8800DR | |
| | | lb/hr | kg/hr | lb/hr | kg/hr | lb/hr | kg/hr | lb/hr | kg/hr |
| 15 psig | max | 120 | 54.6 | Not | Not | 342 | 155 | 120 | 54.6 |
| (1,03 bar G) | min | 12.8 | 5.81 | Available | Available | 34.8 | 15.8 | 12.8 | 5.81 |
| 25 psig | max | 158 | 71.7 | Not | Not | 449 | 203 | 158 | 71.7 |
| (1,72 bar G) | min | 14.0 | 6.35 | Available | Available | 39.9 | 18.1 | 14.0 | 6.35 |
| 50 psig | max | 250 | 113 | Not | Not | 711 | 322 | 250 | 113 |
| (3,45 bar G) | min | 17.6 | 8.00 | Available | Available | 50.1 | 22.7 | 17.6 | 8.00 |
| 100 psig | max | 429 | 194 | Not | Not | 1221 | 554 | 429 | 194 |
| (6,89 bar G) | min | 23.1 | 10.5 | Available | Available | 65.7 | 29.8 | 23.1 | 10.5 |
| 150 psig | max | 606 | 275 | Not | Not | 1724 | 782 | 606 | 275 |
| (10,3 bar G) | min | 27.4 | 12.5 | Available | Available | 78.1 | 35.4 | 27.4 | 12.5 |
| 200 psig | max | 782 | 354 | Not | Not | 2225 | 1009 | 782 | 354 |
| (13,8 bar G) | min | 31.2 | 14.1 | Available | Available | 88.7 | 40.2 | 31.2 | 14.1 |
| 300 psig | max | 1135 | 515 | Not | Not | 3229 | 1464 | 1135 | 515 |
| (20,7 bar G) | min | 37.6 | 17.0 | Available | Available | 107 | 48.5 | 37.6 | 17.0 |
| 400 psig | max | 1492 | 676 | Not | Not | 4244 | 1925 | 1492 | 676 |
| (27,6 bar G) | min | 44.1 | 20.0 | Available | Available | 125 | 56.7 | 44.1 | 20.0 |
| 500 psig | max | 1855 | 841 | Not | Not | 5277 | 2393 | 1855 | 841 |
| (34,5 bar G) | min | 54.8 | 24.9 | Available | Available | 156 | 70.7 | 54.8 | 24.9 |

Table 14. Saturated Steam Flow Rate Limits (Assumes Steam Quality is 100%)

| Process Pressure | Flow Rate Limits | Minimum and Maximum Saturated Steam Flow Rates for line sizes 1 1/2-in./DN 40 through 2-in./DN 50 | | | | | | | |
|---|---|---|---|---|---|---|---|---|---|
| | | 1½-in./DN 40 | | | | 2-in./DN 50 | | | |
| | | Rosemount 8800D | | Rosemount 8800DR | | Rosemount 8800D | | Rosemount 8800DR | |
| | | lb/hr | kg/hr | lb/hr | kg/hr | lb/hr | kg/hr | lb/hr | kg/hr |
| 15 psig | max | 917 | 416 | 342 | 155 | 1511 | 685 | 917 | 416 |
| (1,03 bar G) | min | 82.0 | 37.2 | 34.8 | 15.8 | 135 | 61.2 | 82.0 | 37.2 |
| 25 psig | max | 1204 | 546 | 449 | 203 | 1983 | 899 | 1204 | 546 |
| (1,72 bar G) | min | 93.9 | 42.6 | 39.9 | 18.1 | 155 | 70.2 | 93.9 | 42.6 |
| 50 psig | max | 1904 | 864 | 711 | 322 | 3138 | 1423 | 1904 | 864 |
| (3,45 bar G) | min | 118 | 53.4 | 50.1 | 22.7 | 195 | 88.3 | 118 | 53.4 |
| 100 psig | max | 3270 | 1483 | 1221 | 554 | 5389 | 2444 | 3270 | 1483 |
| (6,89 bar G) | min | 155 | 70.1 | 65.7 | 29.8 | 255 | 116 | 155 | 70.1 |
| 150 psig | max | 4616 | 2094 | 1724 | 782 | 7609 | 3451 | 4616 | 2094 |
| (10,3 bar G) | min | 184 | 83.2 | 78.1 | 35.4 | 303 | 137 | 184 | 83.2 |
| 200 psig | max | 5956 | 2702 | 2225 | 1009 | 9818 | 4453 | 5956 | 2702 |
| (13,8 bar G) | min | 209 | 94.5 | 88.7 | 40.2 | 344 | 156 | 209 | 94.5 |
| 300 psig | max | 8644 | 3921 | 3229 | 1464 | 14248 | 6463 | 8644 | 3921 |
| (20,7 bar G) | min | 252 | 114 | 107 | 48.5 | 415 | 189 | 252 | 114 |
| 400 psig | max | 11362 | 5154 | 4244 | 1925 | 18727 | 8494 | 11362 | 5154 |
| (27,6 bar G) | min | 295 | 134 | 125 | 56.7 | 487 | 221 | 295 | 134 |
| 500 psig | max | 14126 | 6407 | 5277 | 2393 | 23284 | 10561 | 14126 | 6407 |
| (34,5 bar G) | min | 367 | 167 | 156 | 70.7 | 605 | 274 | 367 | 167 |

Table 15. Saturated Steam Flow Rate Limits (Assumes Steam Quality is 100%)

| Process Pressure | Flow Rate Limits | Minimum and Maximum Saturated Steam Flow Rates for line sizes 3-in./DN 80 through 4-in./DN 100 | | | | | | | |
|---|---|---|---|---|---|---|---|---|---|
| | | 3-in./DN 80 | | | | 4-in./DN 100 | | | |
| | | Rosemount 8800D | | Rosemount 8800DR | | Rosemount 8800D | | Rosemount 8800DR | |
| | | lb/hr | kg/hr | lb/hr | kg/hr | lb/hr | kg/hr | lb/hr | kg/hr |
| 15 psig | max | 3330 | 1510 | 1511 | 685 | 5734 | 2601 | 3330 | 1510 |
| (1,03 bar G) | min | 298 | 135 | 135 | 61.2 | 513 | 233 | 298 | 135 |
| 25 psig | max | 4370 | 1982 | 1983 | 899 | 7526 | 3414 | 4370 | 1982 |
| (1,72 bar G) | min | 341 | 155 | 155 | 70.2 | 587 | 267 | 341 | 155 |
| 50 psig | max | 6914 | 3136 | 3138 | 1423 | 11905 | 5400 | 6914 | 3136 |
| (3,45 bar G) | min | 429 | 195 | 195 | 88.3 | 739 | 335 | 429 | 195 |
| 100 psig | max | 11874 | 5386 | 5389 | 2444 | 20448 | 9275 | 11874 | 5386 |
| (6,89 bar G) | min | 562 | 255 | 255 | 116 | 968 | 439 | 562 | 255 |
| 150 psig | max | 16763 | 7603 | 7609 | 3451 | 28866 | 13093 | 16763 | 7603 |
| (10,3 bar G) | min | 668 | 303 | 303 | 137 | 1150 | 522 | 668 | 303 |
| 200 psig | max | 21630 | 9811 | 9818 | 4453 | 37247 | 16895 | 21630 | 9811 |
| (13,8 bar G) | min | 759 | 344 | 344 | 156 | 1307 | 593 | 759 | 344 |
| 300 psig | max | 31389 | 14237 | 14248 | 6463 | 54052 | 24517 | 31389 | 14237 |
| (20,7 bar G) | min | 914 | 415 | 415 | 189 | 1574 | 714 | 914 | 415 |
| 400 psig | max | 41258 | 18714 | 18727 | 8494 | 71047 | 32226 | 41258 | 18714 |
| (27,6 bar G) | min | 1073 | 487 | 487 | 221 | 1847 | 838 | 1073 | 487 |
| 500 psig | max | 51297 | 23267 | 23284 | 10561 | 88334 | 40068 | 51297 | 23267 |
| (34,5 bar G) | min | 1334 | 605 | 605 | 274 | 2297 | 1042 | 1334 | 605 |

Table 16. Saturated Steam Flow Rate Limits (Assumes Steam Quality is 100%)

| Process Pressure | Flow Rate Limits | Minimum and Maximum Saturated Steam Flow Rates for line sizes 6-in./DN 150 through 8-in./DN 200 | | | | | | | |
|---|---|---|---|---|---|---|---|---|---|
| | | 6-in./DN 150 | | | | 8-in./DN 200 | | | |
| | | Rosemount 8800D | | Rosemount 8800DR | | Rosemount 8800D | | Rosemount 8800DR | |
| | | lb/hr | kg/hr | lb/hr | kg/hr | lb/hr | kg/hr | lb/hr | kg/hr |
| 15 psig | max | 13013 | 5903 | 5734 | 2601 | 22534 | 10221 | 13013 | 5903 |
| (1,03 bar G) | min | 1163 | 528 | 513 | 233 | 2015 | 914 | 1163 | 528 |
| 25 psig | max | 17080 | 7747 | 7526 | 3414 | 29575 | 13415 | 17080 | 7747 |
| (1,72 bar G) | min | 1333 | 605 | 587 | 267 | 2308 | 1047 | 1333 | 605 |
| 50 psig | max | 27019 | 12255 | 11905 | 5400 | 46787 | 21222 | 27019 | 12255 |
| (3,45 bar G) | min | 1676 | 760 | 739 | 335 | 2903 | 1317 | 1676 | 760 |
| 100 psig | max | 46405 | 21049 | 20448 | 9275 | 80356 | 36449 | 46405 | 21049 |
| (6,89 bar G) | min | 2197 | 996 | 968 | 439 | 3804 | 1725 | 2197 | 996 |
| 150 psig | max | 65611 | 29761 | 28866 | 13093 | 113440 | 51455 | 65611 | 29761 |
| (10,3 bar G) | min | 2610 | 1184 | 1150 | 522 | 4520 | 2050 | 2610 | 1184 |
| 200 psig | max | 84530 | 38342 | 37247 | 16895 | 146375 | 66395 | 84530 | 38342 |
| (13,8 bar G) | min | 2965 | 1345 | 1307 | 593 | 5134 | 2329 | 2965 | 1345 |
| 300 psig | max | 122666 | 55640 | 54052 | 24517 | 212411 | 96348 | 122666 | 55640 |
| (20,7 bar G) | min | 3572 | 1620 | 1574 | 714 | 6185 | 2805 | 3572 | 1620 |
| 400 psig | max | 161236 | 73135 | 71047 | 32226 | 279200 | 126643 | 161236 | 73135 |
| (27,6 bar G) | min | 4192 | 1901 | 1847 | 838 | 7259 | 3293 | 4192 | 1901 |
| 500 psig | max | 200468 | 90931 | 88334 | 40068 | 347134 | 157457 | 200468 | 90931 |
| (34,5 bar G) | min | 5212 | 2364 | 2297 | 1042 | 9025 | 4094 | 5212 | 2364 |

Table 17. Saturated Steam Flow Rate Limits (Assumes Steam Quality is 100%)

| Process Pressure | Flow Rate Limits | Minimum and Maximum Saturated Steam Flow Rates for line sizes 10-in./DN 250 through 12-in./DN 300 | | | | | | | |
|---|---|---|---|---|---|---|---|---|---|
| | | 10-in./DN 250 | | | | 12-in./DN 300 | | | |
| | | Rosemount 8800D | | Rosemount 8800DR | | Rosemount 8800D | | Rosemount 8800DR | |
| | | lb/hr | kg/hr | lb/hr | kg/hr | lb/hr | kg/hr | lb/hr | kg/hr |
| 15 psig | max | 35519 | 16111 | 22534 | 10221 | 50994 | 23130 | 35519 | 16111 |
| (1,03 bar G) | min | 3175 | 1440 | 2015 | 914 | 4554 | 2066 | 3175 | 1440 |
| 25 psig | max | 46618 | 21146 | 29575 | 13415 | 66862 | 30328 | 46618 | 21146 |
| (1,72 bar G) | min | 4570 | 2073 | 2308 | 1047 | 5218 | 2367 | 4570 | 2073 |
| 50 psig | max | 73748 | 33452 | 46787 | 21222 | 105774 | 47978 | 73748 | 33452 |
| (3,45 bar G) | min | 4575 | 2075 | 2903 | 1317 | 6562 | 2976 | 4575 | 2075 |
| 100 psig | max | 126660 | 57452 | 80356 | 36449 | 181663 | 82401 | 126660 | 57452 |
| (6,89 bar G) | min | 5996 | 2720 | 3804 | 1725 | 8600 | 3901 | 5996 | 2720 |
| 150 psig | max | 178808 | 81106 | 113440 | 51455 | 256457 | 116327 | 178808 | 81106 |
| (10,3 bar G) | min | 7125 | 3232 | 4520 | 2050 | 10218 | 4635 | 7125 | 3232 |
| 200 psig | max | 230722 | 104654 | 146375 | 66395 | 330915 | 150101 | 230722 | 104654 |
| (13,8 bar G) | min | 8092 | 3670 | 5134 | 2329 | 11607 | 5265 | 8092 | 3670 |
| 300 psig | max | 334810 | 151867 | 212411 | 96348 | 480203 | 217816 | 334810 | 151867 |
| (20,7 bar G) | min | 9749 | 4422 | 6185 | 2805 | 13983 | 6343 | 9749 | 4422 |
| 400 psig | max | 440085 | 199619 | 279200 | 126643 | 631195 | 286305 | 440085 | 199619 |
| (27,6 bar G) | min | 11442 | 5190 | 7259 | 3293 | 16411 | 7444 | 11442 | 5190 |
| 500 psig | max | 547165 | 248190 | 347134 | 157457 | 784775 | 355968 | 547165 | 248190 |
| (34,5 bar G) | min | 14226 | 6453 | 9025 | 4094 | 20404 | 9255 | 14226 | 6453 |

## PERFORMANCE SPECIFICATIONS

*The following performance specifications are for all Rosemount models except where noted. Digital performance specifications applicable to both Digital HART and FOUNDATION fieldbus output.*

### Flow Accuracy

Includes linearity, hysteresis, and repeatability.

**Liquids - for Reynolds Numbers over 20000**

**Digital and Pulse Output**
±0.65% of rate

Note: The accuracy for the 8800DR, line sizes 6 to 12-in. (150 to 300mm), is ±1.0% of rate.

**Analog Output**
Same as pulse output plus an additional 0.025% of span

**Gas and Steam - for Reynolds Numbers over 15,000**

**Digital and Pulse Output**
±1.0% of rate

Note: The accuracy for the 8800DR, line sizes 6 to 12-in. (150 to 300mm), is ±1.35% of rate.

**Analog Output**
Same as pulse output plus an additional 0.025% of span

**Accuracy limitations for gas and steam:**

For ½ and 1-in. (DN 15 and DN 25): max velocity of 220 ft/s (67.06 m/s)

For ½ to 4-in. (DN 15 to DN 200) Dual-style meters: max velocity of 100 ft/s (30.5 m/s)

**NOTE**
As the meter Reynolds Numbers decreases below the stated limit to 10,000 the accuracy error band will increase linearly to +/-2.0%. For Reynolds Numbers down to 5,000 the accuracy error band will increase linearly from +/-2.0% to +/-6.0%.

**Process Temperature Accuracy**

2.2 °F (1.2 °C) or 0.4% of reading (in °C), whichever is greater.

**NOTE**
For remote mount installations, add ±0.018 °F/ft. (±0.03 °C/m) of uncertainty to the temperature measurement.

**Mass Flow Accuracy for Temperature Compensated Mass Flow**

**Digital and Pulse Output**
± 2.0% of rate (Nominal)

Nominal conditions include temperature variation in saturation and superheat at 150 psig (10 bar-g) and above.

AVH

For pressure below 150 psig (10 bar-g), add 0.08% of uncertainty for every 15 psi (1 bar) below 150 psig (10 bar-g).

150 - 60 = 90 psi
90 psi / 15 = 6

**Analog Output**
Same as pulse output plus an additional 0.025% of span

2.0% + 6 x .08
= 2.48%

**Repeatability**

± 0.1% of actual flow rate

**Stability**

± 0.1% of rate over one year

**Process Temperature Effect**

Automatic K-factor correction with user-entered process temperature.

Table 18 indicates the percent change in K-factor per 100 °F (55.5 °C) in process temperature from reference temperature of 77 °F (25 °C).

Table 18. Process Temperature Effect

| Material | Percent Change in K-Factor per 100 °F (55.5 °C) |
|---|---|
| 316L @ < 77 °F (25 °C) | + 0.23 |
| 316L @ > 77 °F (25 °C) | - 0.27 |
| *Nickel Alloy C* < 77 °F (25 °C) | + 0.22 |
| *Nickel Alloy C* > 77 °F (25 °C) | - 0.22 |

**Ambient Temperature Effect**

**Digital and Pulse Outputs**
No effect

**Analog Output**
±0.1% of span from –58 to 185 °F (–50 to 85 °C)

### Vibration Effect

An output with no process flow may be detected if sufficiently high vibration is present.

The meter design will minimize this effect, and the factory settings for signal processing are selected to eliminate these errors for most applications.

If an output error at zero flow is still detected, it can be eliminated by adjusting the low flow cutoff, trigger level, or low-pass filter.

As the process begins to flow through the meter, most vibration effects are quickly overcome by the flow signal.

### Vibration Specifications

**Integral Aluminum Housings, Remote Aluminum Housings, and Remote SST Housings**
At or near the minimum liquid flow rate in a normal pipe mounted installation, the maximum vibration should be 0.087-in. (2,21 mm) double amplitude displacement or 1 g acceleration, whichever is smaller. At or near the minimum gas flow rate in a normal pipe mounted installation, the maximum vibration should be 0.043-in. (1,09 mm) double amplitude displacement or ½ g acceleration, whichever is smaller.

**Integral SST Housing**
At or near the minimum liquid flow rate in a normal pipe mounted installation, the maximum vibration should be 0.044-in. (1,11 mm) double amplitude displacement or ⅓ g acceleration, whichever is smaller. At or near the minimum gas flow rate in a normal pipe mounted installation, the maximum vibration should be 0.022-in. (0,55 mm) double amplitude displacement or ⅛ g acceleration, whichever is smaller.

### Mounting Position Effect

Meter will meet accuracy specifications when mounted in horizontal, vertical, or inclined pipelines. Best practice for mounting in a horizontal pipe is to orient the shedder bar in the horizontal plane. This will prevent solids in liquid applications and liquid in gas/steam applications from disrupting the shedding frequency.

### EMI/RFI Effect

Meets EMC requirements to EU Directive 2004/108/EC.

**HART Analog**
Output error less than ±0.025% of span with twisted pair from 80-1000 MHz for radiated field strength of 10 V/m. Tested per EN61326.

**FOUNDATION fieldbus and Digital HART**
No affect on the values that are being given if using HART digital signal or FOUNDATION fieldbus. Tested per EN61326.

### Magnetic-Field Interference

**HART Analog**
Output error less than ±0.025% of span at 30 A/m (rms).

**FOUNDATION fieldbus**
No effect on digital output accuracy at 30 A/m (rms). Tested per EN 61326.

### Series Mode Noise Rejection

**HART Analog**
Output error less than ±0.025% of span at 1 V rms, 60 Hz.

**FOUNDATION fieldbus**
No effect on digital output accuracy at 1 V rms, 60 Hz.

### Common Mode Noise Rejection

**HART Analog**
Output error less than ±0.025% of span at 30 V rms, 60 Hz.

**FOUNDATION fieldbus**
No effect on digital output accuracy at 250 V rms, 60 Hz.

### Power Supply Effect

**HART Analog**
Less than 0.005% of span per volt

**FOUNDATION fieldbus**
No effect on accuracy.

## PHYSICAL SPECIFICATIONS

### NACE Compliance

Materials of Construction meet NACE material recommendations per MR0175/ISO15156 for use in $H_2S$ containing environments in oil field production. Materials of construction also meet NACE recommendations per MR0103-2003 for corrosive petroleum refining environments. MR0103 compliance requires Q25 option in model code.

**NOTE:**
Certificate of compliance for MR0175/ISO15156 requires Q15 as a separate line item.

### Electrical Connections

½–14 NPT, PG 13.5, or M20 × 1.5 conduit threads; screw terminals provided for 4–20 mA and pulse output connections; communicator connections permanently fixed to terminal block.

### Non-Wetted Materials

**Housing**
Low-copper aluminum (FM Type 4X, CSA Type 4X, IP66)
Optional SST housing

**Paint**
Polyurethane

**Cover O-rings**
Buna-N

**Flanges**
316/316L lap joint

**Temperature Sensor (MTA Option)**
Type-N Thermocouple

### Process-Wetted Materials

**Meter Body**
316L wrought stainless and CF-3M cast stainless or N06022 wrought Nickel Alloy and CW2M cast Nickel Alloy. Other material grades available. Consult factory for other materials of construction.

**Flanges**
316/316L stainless steel
Nickel Alloy N06022 Weld Neck

**Collars**
Nickel Alloy N06022
316/316L Stainless Steel

Surface Finish of Flanges and Collars
Standard: To the requirements of the applicable flange standard.
Smooth: 63 to 125 μ inches
(1.6 to 3.1 μ meters) Ra roughness

### Process Connections

Mounts between the following flange configurations:

ASME B16.5 (ANSI): Class 150, 300, 600, 900, 1500

DIN: PN 10, 16, 25, 40, 64, 100, 160

JIS: 10K, 20K, and 40K

Weld-end: Schedule 10, Schedule 40, Schedule 80, Schedule 160

### Mounting

**Integral (Standard)**
Electronics are mounted on meter body.

**Remote (Optional)**
Electronics may be mounted remote from the meter body. Interconnecting coaxial cable available in nonadjustable 10, 20, and 30 ft (3,0, 6,1, and 9,1 m) lengths. Consult factory for non-standard lengths up to 75 ft (22,9 m). Remote mounting hardware includes a pipe mount bracket with one u-bolt.

## Attachment 3-2

Boiler Room Drawings.

Note: Please see Detail G11 and associated Keynotes. The meter is marked by the keynote

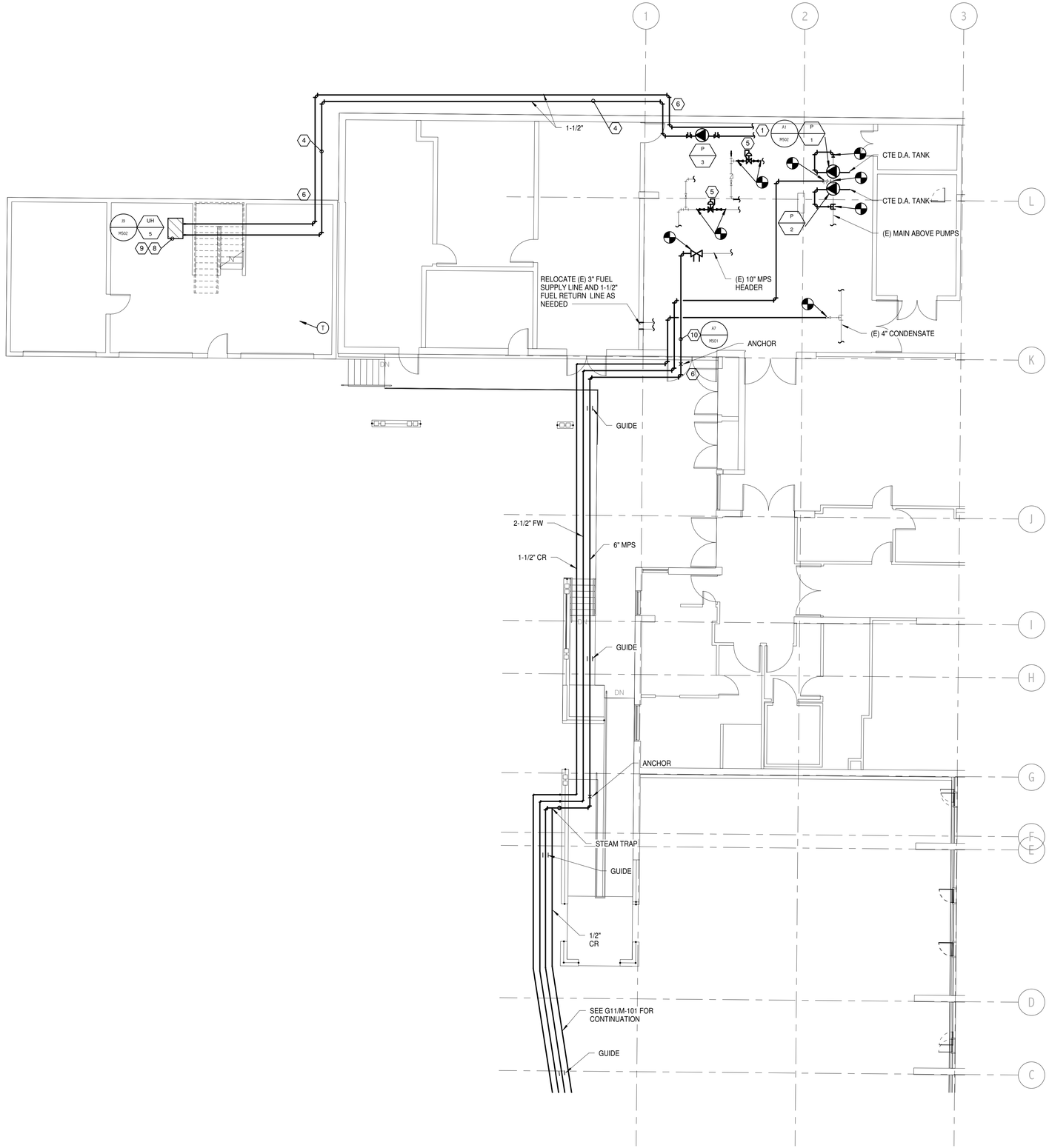


A1 LEVEL1 BOILER ROOM HVAC PIPING PLAN
1/8" = 1'-0"

## NOTES

1. SEE M-001 FOR LEGEND AND ABBREVIATIONS

## KEYED NOTES

1. 1-1/2" HWS AND HWR BOTH CONNECTED TO BUILDING HEAT RAIL RETURN. CONNECT 1-1/2" SUPPLY UPSTREAM AND 1-1/2" RETURN DOWNSTREAM.
2. PROVIDE REDUCED DIAMETER PIPE TO MATCH FLOW METER DIAMETER, A MINIMUM OF 10 PIPE DIAMETERS UPSTEAM OF FLOW METER AND A MINIMUM OF 5 PIPE DIAMETERS DOWNSTREAM.
3. PIPE PRESSURE RELIEF PIPING UP AT THE EXTERIOR AND TERMINATE 60" ABOVE THE ROOF, MINIMUM.

## KEYED NOTES CONT.

4. HANG PIPING SUPPORTED FROM EXTERIOR WALL. INSULATION AND JACKETING SHALL BE CONTINUOUS THROUGH THE HANGERS. USE TYPE 304 SS HARDWARE AT EXTERIOR.
5. INSTALL FW MODULATING CONTROL VALVE.
6. SEAL PENETRATIONS WEATHER TIGHT.
7. TO HTR 1 & 2 AND COMBUSTION/VENTILATION SYSTEM. MOUNT UNISTRUT 48" AFF.
8. MOUNT 8" BELOW CEILING.
9. REMOVE (E) PROPANE HEATER. PIPING AND TANK COMPLETE.
10. DIRT LEG AND STEAM TRAP.

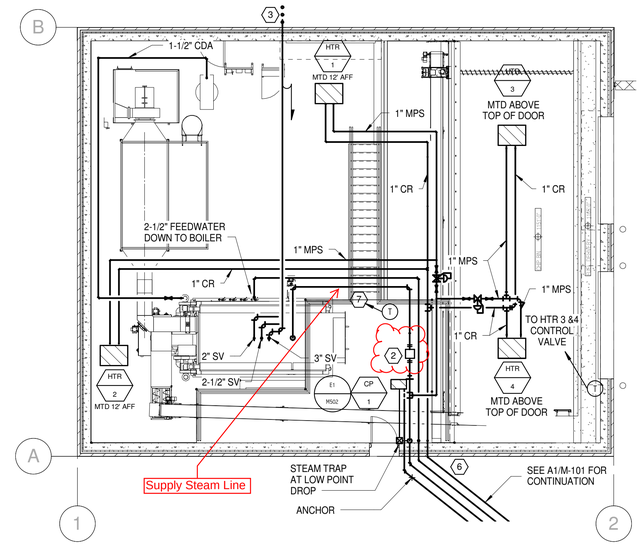


G11 LEVEL 1 HVAC PIPING PLAN
1/8" = 1'-0"

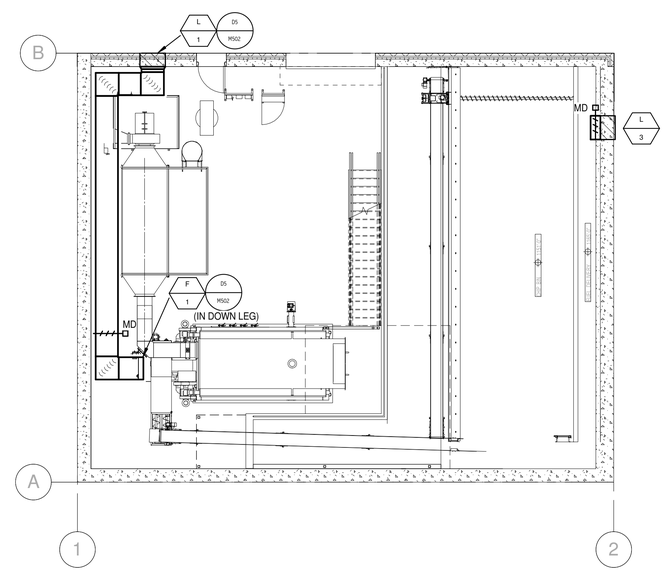


A11 LEVEL 1 HVAC DUCTWORK PLAN
1/8" = 1'-0"

144 Fore Street/P.O. Box 618
Portland, Maine 04104
tel. (207) 772-3846
fax. (207) 772-1070
www.smrtinc.com

ARCHITECTURE
ENGINEERING
PLANNING
INTERIOR DESIGN
COMMISSIONING

SMRT

PROJECT NORTH

ANDROSCOGGIN VALLEY HOSPITAL
BIOMASS PHASE 1
BERLIN, NEW HAMPSHIRE

ISSUED FOR PRICING
07.12.13

CURRENT ISSUE STATUS

| REV | DESCRIPTION | DATE |
|---|---|---|
| 0 | ISSUED FOR CONSTRUCTION | 09-12-2012 |

GRAPHIC SCALE: 0" 1"

| | |
|---|---|
| SCALE: | 1/8" = 1'-0" |
| PROJECT MANAGER: | MIC |
| K/DRAWN BY: | BAL |
| A/E OF RECORD: | PWB |
| PROJECT NO: | 11041 |
| DATE: | 09-12-2012 |

SHEET TITLE:
HVAC DUCTWORK AND PIPING PLAN

SHEET No.
M-101

©COPYRIGHT 2008 SMRT INC

# Attachment 3-3

Calibration Remarks

*"Please summarize the manufacturer's recommended methods and frequency for metering system calibration and provide reference for source document (e.g. owners/operators manual):"*

Vortex Flow Meter and Temperature Sensor:

The manufacturer, Rosemount, calibrates the meter body at the factory. This calibration is characterized by a "K-factor", which is a property of the internal shape of the sensor, and which is stored in the meter electronics. There are no moving parts in a vortex flow meter. As stated Calibration Guideline below, it is very unusual that the shedding bar will wear due to usage, and thus the K-factor will not change. The electronic frequency sensor and the rest of the electronics, however, may require calibration. The calibration period is not given in the Guideline. In our judgment, this should be performed annually.

The factory installed temperature sensor is a Type-N thermocouple, which experiences very little drift. Again the calibration period is not offered, and we recommend one year.

# Calibration Verification Practices Rosemount 8800D Vortex Flowmeters (HART™ Protocol)

## INTRODUCTION

This guideline is intended for users of Rosemount 8800D Vortex flowmeters to develop plant specific calibration/verification procedures and is focused on procedures that do not require the removal of the vortex meter body from the line or shutdown of the line. This document shall provide the basis for verification of the calibration of Rosemount 8800D Vortex flowmeters. It does not include calibration applications associated with the FOUNDATION fieldbus communication protocol. It was prepared by Technical Specialists at Rosemount Flow Division's headquarters in Eden Prairie, MN, USA.

## Overview

This section is for the use of those who are generally experienced in the calibration and verification of electronic transmitters including the use of a Field Communicator and/or AMS Device Manager. It is not intended to replace the general calibration/verification procedures as detailed in Section 2, the 475 Field Communicator Manual, or the Rosemount 8800 Vortex flowmeter user's manual. This section will outline the documentation and hardware required for calibration/verification of the Rosemount 8800 Vortex flowmeter.

### Documentation Required

- Applicable Instrument Specifications (latest revision)
- Instrument Verification Report form (see "Appendix A: Electronics Verification Form" on page 8)
- Factory Calibration Report
- Rosemount 8800D Vortex Flowmeter Manual 00809-0100-4004 (optional) http://www.emersonprocess.com/rosemount/document/man/00809-0100-4004.pdf
- Field Communicator Manual 00809-0100-4276 (optional) http://www.documentation.emersonprocess.com/groups/public_assetoptprodlit/documents/instruction_manuals/475_allma_usermanual.pdf

If there are any questions, or more information is required, please contact the Rosemount technical support at 1-800-999-9307 or via e-mail at Specialist-Vortex.EPM-RTC@emerson.com.

### Hardware and Tools Required:

- Power supply, 10-55 VDC
- Multi-meter, 4-1/2 digits (within NIST traceable calibration compliance time period)
- 475 Field Communicator or AMS Device Manager
- Precision Load Resistor: 250 ohms +/- 0.01% 2 watt or 500 ohms +/- 0.01% 2 watt
- Jumper wires with end connectors
- Temperature Sensor Calibrator or Calibrated Oil Bath (MTA Option Only)

### Pre-Configuration Checks (Field Communicator not connected to transmitter)

- Verifying the Security Jumper Status

Insure that power is removed from the transmitter. Remove the housing cover opposite the field terminal side. Position the security jumper as desired. If the Security jumper is not installed – SECURITY OFF (NOT write protected).

## CALIBRATION GUIDELINES

This section provides the calibration verification procedure to follow for a given use case of the Rosemount 8800 Vortex flowmeter.

### Calibration/Verification Method Hierarchy

One of the following procedural hierarchies should be followed to verify if an installed vortex meter is functioning properly, and if re-calibration is required. Some procedures may not be required depending on verification results or the application needs. Please see the use cases below and follow the procedures listed for the applicable use case.

#### Use Case I – 8800D Vortex meter without MTA Option

1. Verify Basic Configuration Parameters
2. Electronics Verification through Flow Simulation
3. Vortex Sensor Verification
4. Meter Body/Shedder Bar Verification *(If Required)*
5. Wet Calibration *(If Required)*

#### Use Case II – 8800D Vortex meter with MTA Option using Process Fluid of T-comp Sat Steam

1. Verify Basic Configuration Parameters
2. Electronics Verification through Flow Simulation
3. Perform Density Test Calculation
4. Vortex Sensor Verification
5. Temperature Sensor Verification
6. Meter Body/Shedder Bar Verification (*If Required)*
7. Wet Calibration *(If Required)*

#### Use Case III – 8800D Vortex meter with MTA Option using Process Fluids of Gas/Steam or Liquid

1. Verify Basic Configuration Parameters
2. Electronics Verification through Flow Simulation
3. Vortex Sensor Verification
4. Temperature Sensor Verification
5. Meter Body/Shedder Bar Verification *(If Required)*
6. Wet Calibration *(If Required)*

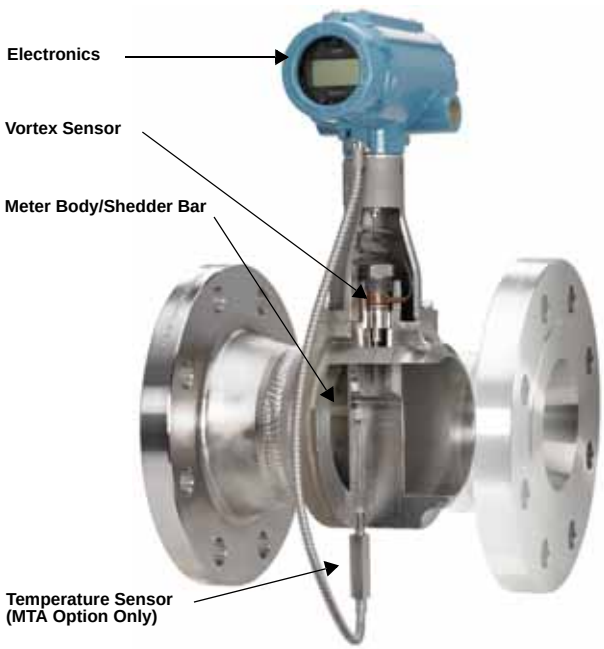

**Procedure I: Verify Basic Configuration Paramaters**

**NOTE:**
Make sure that the flowmeter is powered properly.

**Step 1: Process Fluid**

A. Verify the correct Process Fluid Type has been selected (Gas/Steam, Liquid, or Tcomp Sat Steam).

HART Commands: 1 (Device Setup), 3 (Basic Setup), 2 (Process Config), 2 (Process Fluid)

A.1 IF the Process Fluid is correct, press HOME to return to the main menu.

A.2 IF the Process Fluid is incorrect, select the correct Process Fluid from the list.

Please note you MUST SEND the data whenever changes are made.

**Step 2: Fixed Process Temperature**

B. Verify the correct Process Temperature has been entered.

HART Commands: 1 (Device Setup), 3 (Basic Setup), 2 (Process Config), 3 (Fixed Process Temperature)

B.1 IF the Process Temperature is correct, press HOME to return to the main menu.

B.2 IF the Process Temperature, enter the correct Process Temperature.

Please note you MUST SEND the data whenever changes are made.

**Step 3: Fixed Process Density or Density Ratio**

A. If you are using mass flow units, you must enter the process density. If you are using Standard or Normal volumetric flow units, you must enter a density ratio. The device is also capable of calculating density ratio using the ideal gas law using the process temperature, pressure, compressibility, and the base pressure, temperature, and compressibility.

B. Verify the correct Fixed Process Density has been entered (for mass flow units).

HART Commands: 1 (Device Setup), 3 (Basic Setup), 2 (Process Config), 4 (Density/Density Ratio), 2 (Fixed Process Density)

B.1 IF the Process Density is correct, press HOME to return to the main menu.

B.2 IF the Process Density is incorrect, enter the correct Process Density.

Please note you MUST SEND the data whenever changes are made.

C. Verify the correct Density Ratio has been entered (for standard or normal volumetric flow units).

HART Commands: 1 (Device Setup), 3 (Basic Setup), 2 (Process Config), 4 (Density/Density Ratio), 1 (Density Ratio), 1 (Density Ratio)

C.1 IF the Density Ratio is correct, press HOME to return to the main menu.

C.2 IF the Density Ratio is incorrect, enter the correct Density Ratio or choose option 2 to calculate density ratio using the ideal gas law.

Please note you MUST SEND the data whenever changes are made.

**Step 4: Reference K-Factor**

A. Verify the correct Reference K-Factor has been selected by ensuring the value entered in the software matches the value on the meter body tag.

HART Commands: 1 (Device Setup), 3 (Basic Setup), 3 (Reference K-Factor)

**NOTE:**
Compensated K-Factor can also be read. It will include corrections for entrance effects (Mating Pipe ID), and installation effects.

A.1 IF the Reference K-Factor is correct, press HOME to return to the main menu.

A.2 IF the Reference K-Factor is incorrect, enter the correct Reference K-Factor.

Please note you MUST SEND the data whenever changes are made.

**Step 5: Flange Type**

A. Verify the correct Flange Type has been entered into the vortex meter. The vortex electronics uses the reference k-factor and flange type to correct for installation effects for high pressure meter bodies (smaller diameter than standard meter body).

HART Commands: 1 (Device Setup), 3 (Basic Setup), 4 (Flange Type)

A.1 IF the Flange Type is correct, press HOME to return to the main menu.

A.2 IF the Flange Type is incorrect, enter the correct Flange Type

Please note you MUST SEND the data whenever changes are made.

**Step 6: Mating Pipe I.D.**

A. Verify the correct Mating Pipe I.D. has been entered.

HART Commands: 1 (Device Setup), 3 (Basic Setup), 5 (Mating Pipe I.D.)

A.1 IF the Mating Pipe I.D. is correct, press HOME to return to the main menu.

A.2 IF the Mating Pipe I.D. is incorrect, enter the correct Mating Pipe I.D.

Please note you MUST SEND the data whenever changes are made.

**Step 7: Primary Variable**

A. Verify the correct Primary Variable has been selected (i.e. Volume, Mass, Velocity, or Process Temperature).

HART Commands: 1 (Device Setup), 3 Basic Setup), 6 (Variable Mapping), 1 (Primary Variable)

A.1 IF the Primary Variable is correct, press HOME to return to the main menu.

A.2 IF the Primary Variable is incorrect, select the correct Primary Variable.

Please note you MUST SEND the data whenever changes are made.

**Step 8: Primary Variable Units**

A. Verify the correct Primary Variable Unit has been selected (i.e. lb/hr, lb/sec, kg/hr, etc).

HART Commands: 1 (Device Setup), 3 (Basic Setup), 7 (PV Units)

A.1 IF the PV Unit is correct, press HOME to return to the main menu.

A.2 IF the PV Unit is incorrect, select the correct PV Unit.

Please note you MUST SEND the data whenever changes are made.

**Step 9: Range Values**

A. Verify the correct Range Values (4 and 20 mA points) have been selected.

HART Commands: 1 (Device Setup), 3 (Basic Setup), 8 (Range Values)

1 – URV (20 mA)

2 – LRV (4 mA)

A.1 IF the Range Values are correct, press HOME to return to the main menu.

A.2 IF the Range Values are incorrect, enter the correct range values.

Please note you MUST SEND the data whenever changes are made.

**Step 10: Signal Processing**

A. The last step in performing a basic configuration is executing an Auto Adjust Filter (Optimize Flow Range in AMS Device Manager). However, since this step is simply to verify the basic configuration and that the individual filters may have been customized for your particular application, you should go to the following and record the values present.

HART Commands: 1 (Device Setup), 4 (Detailed Setup) 3 (Signal Processing), 2 (Manual Filter Adjust)

3 – Low Flow Cutoff _____

4 – Lowpass Filter _____

5 – Trigger Level _____

After selecting the each filter, press OK to view the value and record it, and then press ABORT to leave the screen without making any changes.

**Procedure II. Electronics Verification through Flow Simulation**

**NOTE:**
In order for the Flow Simulation Function to operate, Primary Variable must be set to Velocity Flow, Volume Flow, or Mass Flow. If PV is set to Process Temperature, it should be temporarily mapped to the flowrate of interest.

**NOTE:**
For Use Case II - 8800D Vortex meter with MTA Option using Process Fluid of T-comp Sat Steam, the Process Fluid should be changed to Gas/Steam before running a flow simulation.

HART Commands: 1 (Device Setup), 3 (Basic Setup), 2 (Process Config), 2 (Process Fluid)

Please note you MUST SEND the data whenever changes are made.

Refer to “Appendix A: Electronics Verification Form” on page 8 for a Verification Form to be filled out as part of this exercise. You may want to fill out the “expected flowrate” section before beginning Step 1.

**Step 1: Read calculated Shedding frequency at URV.**

HART Commands: 1 (Device Setup), 2 (Diagnostics and Service), 7 (Shedding Freq at URV).

**Step 2: Enter Internal Flow Simulation: Fixed flow, % of range**

HART Commands: 1 (Device Setup), 2 (Diagnostics and Service), 4 (Flow Simulation), 3 (Configure Flow Simulation), 1 (Internal), 1 (Fixed Flow), 1 (% of Range)

**Step 3: Enter 50% flow using keypad**

**Step 4:Verify that flow rate output is 50% of full scale**

HART Commands: 1 (Device Setup), 2 (Diagnostics and Service), 4 (Flow Simulation), 1 (Flow)

A. IF the flow rate output is 50% of full scale, the electronics are working properly.

B. IF the flow rate output is not 50% of full scale, See Troubleshooting guide for Electronics or Section 5 of the Reference Manual.

**Step 5: Verify that Frequency = ½ Calculated Shedding Frequency at URV**

HART Commands: 1 (Device Setup), 2 (Diagnostics and Service), 4 (Flow Simulation), 2 (Shed Freq)

Optional: Verify shedding frequency from internal signal generator is the same as displayed on handheld communicator or AMS Device Manager. This can be accomplished by connecting a device such as a Fluke multi-meter to the test points behind the display labeled "TP1" and Ground (using the universal ground symbol). Connect the positive lead of the digital multi-meter to TP1 and the negative lead to the Ground lug. The frequencies should match to a plant specified tolerance that is no less than the tolerance of the device used to read the frequency.

A. IF the shedding frequency is 50% of full scale, the electronics are working properly

B. IF the shedding frequency is not 50% of full scale, See Troubleshooting Guide for Electronics or Section 5 of the Reference Manual.

**Step 6:Exit Simulation, and enable normal operation**

HART Commands: 1 (Device Setup), 2 (Diagnostics and Service), 4 (Flow Simulation), 4 (Enable Normal Flow)

**NOTE:**
If the Process Fluid had been changed to Gas/Steam as required by Use Case II, return the Process Fluid to T-Comp Sat Steam.

HART Commands: 1 (Device Setup), 3 (Basic Setup), 2 (Process Config), 2 (Process Fluid)

Please note you MUST SEND the data whenever changes are made.

**Procedure III. Vortex Sensor Verification**

**Step 1: Signal-to-Trigger Level**

A. Read Signal-to-Trigger (Sig/Tr) Level under normal flowing conditions

HART Commands: 1 (Device Setup), 4 (Detailed Setup), 3 (Signal Processing), 1 (Optimize Flow Range), 3 (Sig/Tr)

A.1 IF the Signal-to-Trigger Level is >4, Sensor is assured to be Healthy.

**NOTE:**
Signal-to-Trigger level will vary even at steady flow. Verify that average of several readings remain above 4.

A.2 IF the Signal-to-Trigger Level is <4, See Appendix B

**Procedure IV: Temperature Sensor Verification (For MTA Option Only)**

Typically, temperature sensors and temperature transmitters are verified as individual units. However, due to the Rosemount 8800D design that uses a Type N special limits thermocouple and a custom interface between the thermocouple and the electronics, best practice is to verify the components as a system.

**Step 1:Remove thermocouple from meter body**

A.Turn off power to the Rosemount 8800D.

B. Remove the thermocouple from the meter body by using a $^{1}/_{2}$-inch open wrench.

**NOTE:**
Use plant approved procedure for removing a temperature senor from a thermowell.

C. Remove the thermocouple from the electronics by using a 2.5 mm allen wrench to remove the cap head screw from the electronics.

D. Gently pull the thermocouple connector from the electronics.

**Step 2:Remove electronics housing from the meter body**

**NOTE:**
If removing the electronics housing is not desired, a spare set of electronics may be used for temperature sensor verification.

A.Turn off the power to the Rosemount 8800D.

B. Disconnect the wires and conduit from the housing.

C.Loosen the screw on the support tube access cover if present.

D. Remove the access cover (if applicable).

E. Use a 5/32-inch hex wrench to loosen the housing rotation screws (at the base of the electronics housing) by turning the screws clockwise (inward) until they clear the bracket.

F. Slowly pull the electronics housing no more than 1.5 in. (40 mm) from the top of the support tube.

**NOTE:**
Damage to the sensor cable may occur if the sensor cable is stressed.

G. Loosen the sensor cable nut from the housing with a $^{5}/_{16}$-in. open end wrench.

**Step 3:Reconnect thermocouple to electronics**

A. Insert the thermocouple connector into the electronics housing using care to align the pin and the cap head screw.

B. Tighten cap screw with 2.5 mm allen wrench.

**Step 4:Bring thermocouple and electronics assembly to the designated temperature sensor calibrator or precision liquid bath**

**NOTE:**
System accuracy shall be no less than ±0.025 °C (±0.045 °F).

System stability shall be no less than ±0.025 °C (±0.045 °F). Extreme care should be taken that the calibration source is operating properly and within specifications.

A. Connect power to the Rosemount 8800D.

**Step 5:Set temperature sensor calibrator or precision liquid bath to a set point of 100 °C (212 °F)**

A. IF Process Temperature value in the electronics matches the reference temperature sensor within 2 °C (4 °F), then the thermocouple is healthy and within specifications.

B. IF Process Temperature value in the electronics matches the reference temperature sensor within 2 °C (4 °F), then repeat with a new electronics and thermocouple to verify the calibration source.

B.1. IF the new set of electronics and thermocouple works, then contact your local Rosemount representative for assistance with returning the unit to the factory.

B.2. IF the new set also fails, then verify the calibration source.

HART Command: 1 (Device Setup), 1 (Process Variables), 4 (View Other Variables), 9 (Process Temperature)

**Procedure V: Perform Density Test Calculation (For Use Case II Only)**

For Use Case II – copy from above, the electronics verification was performed using a fixed process density. When the device is in Tcomp Sat Steam mode, the process density is dynamically calculated from the measured process temperature. This procedure will verify that the electronics can calculate the corresponding density of saturated steam for given process temperatures.

**Step 1:Verify Process Fluid is set to Tcomp Sat Steam**

HART Commands: 1 (Device Setup), 3 (Basic Setup), 2 (Process Config), 2 (Process Fluid)

Please note you MUST SEND the data whenever changes are made.

**Step 2:Enter Density Test Calculation**

HART Commands: 1 (Device Setup), 2 (Diagnostics and Service), 1 (Test/Status), 3 (Density Test Calc)

**Step 3:Enter a process temperature of interest between 80-320 °C (176-608 °F)**

**Step 4:Compare calculated density to ASME Saturated Steam Table found in APPENDIX C**

**Procedure VI: Meter Body/Shedder Bar Verfication *(Required)***

**NOTE:**
Shedder Bar inspection is not required in the vast majority of applications. It is very unusual that a vortex flowmeter will require re-calibration for shedder bar wear in normal applications. (Vortex meters count the frequency of shedding which is proportional to the fluid velocity – and is not highly sensitive to edge sharpness). Exceptions to this are highly corrosive applications, or applications with high levels of suspended solids. Wear in these types of applications may be significant enough to cause a shift in the meters K-factor, and require re-calibration. This is an unusual circumstance.

If shedder bar wear is suspected, the following steps can be followed to determine if it is significant enough to warrant re-calibration.

**Step 1: Remove meter from process line.**

**Step 2: Inspect Shedder Bar leading edge for sharpness.**

A.Visual Inspection

This requirement may be considered satisfied by visual inspection if the edge does not seem to reflect a beam of light when viewed with an unaided eye.

**Procedure VII: Wet Calibration *(If Required)***

If the criteria of Procedures I through VI cannot be met or completed successfully the meter body should be re-calibrated by a certified Flow Test lab. If convenient, the meter can be sent back to the Rosemount Factory in Eden Prairie, MN, USA or a local Rosemount Service center that supports vortex calibration. If this is impracticable due to location, all developed industrial nations will have National Technical Standard-certified Flow Labs which may perform this service.

## APPENDIX A: ELECTRONICS VERIFICATION FORM

Procedure Steps – Readings are taken while the transmitter is in Flow Simulation mode.

**A. Read shedding frequency in the transmitter (1,1,4,6)**

Frequency = _____ Hz

**B. Read Flow Rate output (1,1,1)**

Flow = _____

**C. Read Compensated K-factor (1,4,1,1,1)**

K Compensated = _____

**D. Calculate expected (Theoretical) flow rate for given frequency.**

Calculate the theoretical volumetric or mass flow rate as follows:

$Q_{vol}$ = F(Hz) / (K x Cx)

$Q_{mass}$ = F(Hz) x ρ / (K x Cx )

Where:

F(Hz) = Test Frequency

K = Compensated K-Factor (From 475)

ρ = Density at Operating Condition (From 475)

Cx = Unit Conversion factor (See Table 1 below)

Calculate a base volumetric flow rate (i.e. SCFM or NCMH) as follows:

$Q_{basevol}$ = F(Hz) x ((Density Ratio)/(K x Cx ))

Where:

$$\text{Density Ratio} = \frac{\text{density at actual (flowing conditions)}}{\text{density at base (standard or normal) conditions}}$$

Density Ratio (1,3,2,4,1,1)

TABLE 1. Unit Conversion Factors

| Units (Actual) | Conversion Factor (Cx) | Units (Actual) | Conversion Factor (Cx) |
|---|---|---|---|
| gal/s | 1.00000 E+00 | CuMtr/h | 7.33811 E-02 |
| gal/m | 1.66667 E-02 | CuFt/m | 1.24675 E-01 |
| gal/h | 2.77778 E-04 | CuFt/h | 2.07792 E-03 |
| Impgal/s | 1.20095 E+00 | bbl/h | 1.16667 E-02 |
| Impgal/m | 2.00158 E-02 | kg/s | (2.64172 E-01)/Density |
| Impgal/h | 3.33597 E-04 | kg/h | (7.33811 E-02)/Density |
| L/s | 2.64172 E-01 | lb/h | (2.07792 E-03)/Density |
| L/m | 4.40287 E-03 | shTon/h | (1.03896 E-06)/Density |
| L/h | 7.33811 E-05 | mTon/h | (7.33811 E-05)/Density |
| CuMtr/m | 4.40287 E-03 | SPECIAL | Cx/(Special Unit Conversion Number) |

**E. Verify that calculated flow matches flow output from the transmitter**

E.1.IF flows don't match, and Basic Configuration is re-verified as correct – electronics should be replaced

**F. Verify 4-20 mA Output**

For a given input frequency F(Hz), and K-factor(compensated), find output current I:

Where: LRV = Lower Range Value (User unit)

URV = Upper Range Value (User unit)

$$I = \left(\left[\frac{F(\text{Hz})/(K \times Cx) - LRV}{URV - LRV}\right] \times 16\right) \div 4$$

## APPENDIX B: VORTEX SENSOR HEALTH VERIFICATION

Verifying Vortex Sensor if Signal-to-Trigger Level is less than 4

**STEP 1: Check Sensor and sensor lead wire for shorts**

a) Isolated from the process

b) Can be checked with no process shutdown

c) Single sensor for all designs, line sizes

d) Can be replaced in the field without impacting calibration and without breaking the process seal(1)

**PROCEDURE STEPS:**

1. Loosen the three housing rotation screws with Allen head wrench.
2. Slowly pull electronics housing - NOT MORE THAN 2 INCHES from top of support tube (To avoid damage to lead wire).
3. Loosen and remove sensor cable nut (using a 5/16-in. wrench)
4. Using Multi-meter touching co-axial connector pin (and grounded to meter body), verify that sensor impedance is > 1 megaohm.
5. If multi-meter reads short, sensor must be replaced*. See Reference Manual for details.

A special connector has been developed to make this measurement easier. A part is available from www.pasternack.com and is part number PE36517-18. A picture of the connector can be found below:

*(1) Although no process seal is broken, it is recommended that the pipe be de-pressurized when replacing sensors*

**STEP 2: Check Sensor/Post Interface for damage**

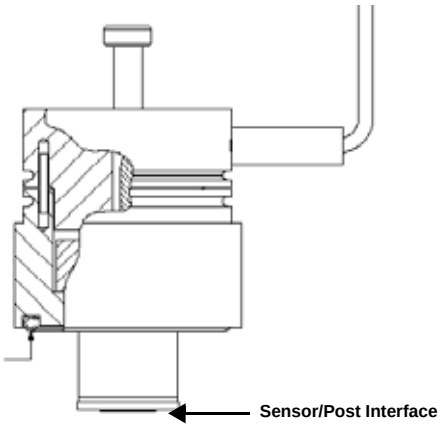


**PROCEDURE STEPS:**

1. Sensor should only be checked for mechanical damage if all other potential sources have been checked first.
2. Sensor/Post interface is important, and can be damaged when removing or inserting sensors.
3. Sensor should fit on post snugly. If sensor can be removed (pulled) from post easily, it likely has been damaged from a slug flow or water hammer, and should be replaced with a new sensor(1).
4. Sensor/Post interface should be round. If damaged, it may be slightly ‘ovaled’.
5. Sensors should not be removed and reinstalled more than once, due to the potential for damage.

### Replacing Sensor - Safety Considerations

- Replaceable sensor also serves as a secondary seal up to Flange Rating with metal O-ring
- Recommended procedure for replacing a sensor is to de-pressurize the flow process

Warning on the sensor nut retaining replaceable sensor:

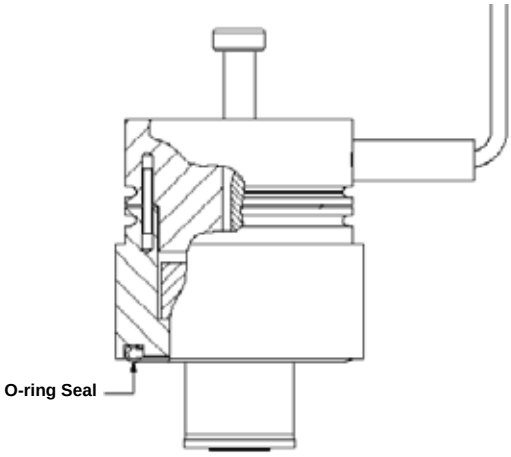


### Flexure System Designed for Safety

- Rigid Center Flexure designed to operate indefinitely at meter design limits
- “U-Shape” Flexure will fail first in the even of corrosion.

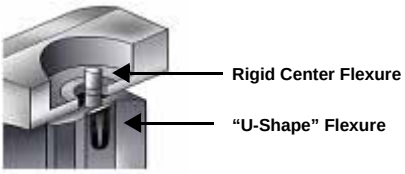

TABLE 2. ASME Saturated Steam Table (English Units)

| Temperature (°F) | Density (lbs/ft$^3$) | Temperature (°F) | Density (lbs/ft$^3$) | Temperature (°F) | Density (lbs/ft$^3$) |
|---|---|---|---|---|---|
| 176 | 0.0183 | 325 | 0.2175 | 475 | 1.1658 |
| 180 | 0.0199 | 330 | 0.2322 | 480 | 1.2237 |
| 185 | 0.0221 | 335 | 0.2477 | 485 | 1.2842 |
| 190 | 0.0244 | 340 | 0.2640 | 490 | 1.3473 |
| 195 | 0.0270 | 345 | 0.2812 | 495 | 1.4131 |
| 200 | 0.0297 | 350 | 0.2992 | 500 | 1.4817 |
| 205 | 0.0327 | 355 | 0.3182 | 505 | 1.5532 |
| 210 | 0.0360 | 360 | 0.3381 | 510 | 1.6279 |
| 215 | 0.0394 | 365 | 0.3591 | 515 | 1.7058 |
| 220 | 0.0432 | 370 | 0.3810 | 520 | 1.7871 |
| 225 | 0.0472 | 375 | 0.4041 | 525 | 1.8720 |
| 230 | 0.0516 | 380 | 0.4282 | 530 | 1.9606 |
| 235 | 0.0563 | 385 | 0.4535 | 535 | 2.0532 |
| 240 | 0.0613 | 390 | 0.4800 | 540 | 2.1499 |
| 245 | 0.0666 | 395 | 0.5077 | 545 | 2.2510 |
| 250 | 0.0724 | 400 | 0.5368 | 550 | 2.3567 |
| 255 | 0.0785 | 405 | 0.5671 | 555 | 2.4673 |
| 260 | 0.0850 | 410 | 0.5989 | 560 | 2.5830 |
| 265 | 0.0920 | 415 | 0.6321 | 565 | 2.7042 |
| 270 | 0.0994 | 420 | 0.6668 | 570 | 2.8312 |
| 275 | 0.1073 | 425 | 0.7031 | 575 | 2.9643 |
| 280 | 0.1157 | 430 | 0.7409 | 580 | 3.1040 |
| 285 | 0.1246 | 435 | 0.7805 | 585 | 3.2508 |
| 290 | 0.1340 | 440 | 0.8218 | 590 | 3.4051 |
| 295 | 0.1441 | 445 | 0.8649 | 595 | 3.5675 |
| 300 | 0.1547 | 450 | 0.9099 | 600 | 3.7387 |
| 305 | 0.1659 | 455 | 0.9568 | 605 | 3.9194 |
| 310 | 0.1777 | 460 | 1.0058 | 608 | 4.0329 |
| 315 | 0.1903 | 465 | 1.0569 | | |
| 320 | 0.2035 | 470 | 1.1102 | | |

TABLE 3. ASME Saturated Steam Table (SI Units)

| Temperature (°C) | Density (kg/m$^3$) | Temperature (°C) | Density (kg/m$^3$) | Temperature (°C) | Density (kg/m$^3$) |
|---|---|---|---|---|---|
| 80 | 0.2933 | 165 | 3.6711 | 250 | 19.9850 |
| 85 | 0.3535 | 170 | 4.1228 | 255 | 21.7884 |
| 90 | 0.4235 | 175 | 4.6180 | 260 | 23.7339 |
| 95 | 0.5045 | 180 | 5.1599 | 265 | 25.8332 |
| 100 | 0.5977 | 185 | 5.7519 | 270 | 28.0994 |
| 105 | 0.7046 | 190 | 6.3973 | 275 | 30.5473 |
| 110 | 0.8265 | 195 | 7.1001 | 280 | 33.1939 |
| 115 | 0.9650 | 200 | 7.8641 | 285 | 36.0581 |
| 120 | 1.1217 | 205 | 8.6937 | 290 | 39.1617 |
| 125 | 1.2983 | 210 | 9.5934 | 295 | 42.5300 |
| 130 | 1.4967 | 215 | 10.5680 | 300 | 46.1921 |
| 135 | 1.7188 | 220 | 11.6228 | 305 | 50.1827 |
| 140 | 1.9666 | 225 | 12.7634 | 310 | 54.5437 |
| 145 | 2.2423 | 230 | 13.9958 | 315 | 59.3274 |
| 150 | 2.5481 | 235 | 15.3267 | 320 | 64.6003 |
| 155 | 2.8865 | 240 | 16.7632 | | |
| 160 | 3.2599 | 245 | 18.3131 | | |

*Standard Terms and Conditions of Sale can be found at www.rosemount.com/terms_of_sale*
*The Emerson logo is a trade mark and service mark of Emerson Electric Co.*
*Rosemount and the Rosemount logotype are registered trademarks of Rosemount Inc.*
*PlantWeb is a registered trademark of one of the Emerson Process Management group of companies.*
*All other marks are the property of their respective owners.*

© 2010 Rosemount Inc. All rights reserved.

**Emerson Process Management**
**Rosemount Measurement**
8200 Market Boulevard
Chanhassen MN 55317 USA
Tel (USA) 1 800 999 9307
Tel (International) +1 952 906 8888
Fax +1 952 949 7001

**Emerson Process Management**
**Flow**
Neonstraat 1
6718 WX Ede
The Netherlands
T +31 (0)318 495555
F +31(0) 318 495556

**Emerson FZE**
P.O. Box 17033
Jebel Ali Free Zone
Dubai UAE
Tel +971 4 811 8100
Fax +971 4 886 5465

**Emerson Process Management Asia Pacific**
**Pte Ltd**
1 Pandan Crescent
Singapore 128461
Tel +65 6777 8211
Fax +65 6777 0947
Service Support Hotline : +65 6770 8711
Email : Enquiries@AP.EmersonProcess.com



EMERSON
Process Management

# Attachment 3-4

Interim Alternative Metering Method

**Attachment 3-4**

**Interim Alternate Metering Method – USEFUL THERMAL ENERGY**

**FACILITY:** Androscoggin Valley Hospital

**LOCATION:** Berlin, New Hampshire

**RELEVANT RULING:** Draft Puc 2505.02(e)(2)

## ❖ Overview

In compliance with Order no. 25,678 issued June 19, 2014, and pursuant with draft Puc 2505.02(e), this document provides a detailed explanation of the methodology used to measure and calculate thermal energy, in MWh's produced by the Androscoggin Valley Hospital's biomass plant in any preceding period of operation.

The facility came online on March 21, 2014. However, consistent electronic data tracking began only after September 1, 2014. Before September, 2014, we have consistent fuel purchasing records. The following analysis is therefore broken into two calendar segments: March 21 – August; and September – Present.

## ❖ Measurement of Useful Thermal Energy: September 1, 2014 to Present

**Available Digitally Tracked Data**

- Pounds of saturated steam leaving the boiler, digitally stored hourly.
- Daily and monthly cumulative total pounds of steam, calculated using the hourly data, and digitally stored.
- Temperature of saturated steam leaving the boiler, monitored digitally but not tracked digitally. It is manually recorded once daily.

**Methodology**

Total Daily Thermal Energy = [ ($\dot{m}_{out}$) x ($h_{out}$) - ($\dot{m}_{in}$) x ($h_{in}$) ] x (0.98).

- ($\dot{m}_{out}$) is the daily pounds of steam leaving the boiler
- ($h_{out}$) is the daily average specific enthalpy (Btu/lb) of steam leaving the boiler calculated using the steam temperature which is recorded once per day, and using the assumption that the steam is saturated.
- ($\dot{m}_{in}$) is the daily pounds of boiler feedwater into the boiler.
- ($h_{in}$) is the daily average specific enthalpy (Btu/lb) calculated using the observed feedwater temperature.
- 0.98 is the assumed 2.0% loss in useful thermal energy due to parasitic loads, as required by draft PUC 2506.05(f).

**Rationale**

- Mass flow rate of boiler feedwater, $\dot{m}_{in}$, is not measured directly. We assume that it is equal to ($\dot{m}_{out}$). Because there exist no ancillary steam usages or parasitic loads between the flow meter on the steam supply line and the feedwater line.

- The average daily specific enthalpy of entering feedwater ($h_{in}$) is assumed equal to that of saturated water at 195˚F. The facility staff reports this to be the average temperature as monitored on an analogue thermometer positioned at the boiler feedwater just before entering the boiler.

- The average daily specific enthalpy of steam leaving the boilers ($h_{out}$) is assumed equal to saturated steam at the daily recorded supply temperature. This boiler model has no capability for producing superheated steam. The supply pressure is measured at the boiler collar.

- Assume a 2.0% loss in useful thermal energy due to parasitic loads, as required by draft PUC 2506.05(f).

**Comparison with draft Puc 2506.04(m)**

The methodology and assumptions used herein to estimate useful thermal energy generated by Androscoggin Valley Hospital after September 1, 2014, are actually closely aligned with guidance provided in the draft Chapter of the Public Utilities Commission 2506.04(m) Renewable Portfolio Standards. Notable exceptions are:

- ($\dot{m}_{out}$) is not measured close to the header. Therefore, minor parasitic loads (condensate traps) between the boiler and the header have not been explicitly accounted for.

- ($h_{out}$) and ($\dot{m}_{out}$) are daily values in the above equation, not hourly. The reason for this is that although the mass flow rate is recorded hourly, pressure and temperature are not recorded hourly, and so the (multiplicative) product ($h_{out}$)x($\dot{m}_{out}$) can only be reported as a daily average value.

- Pressure and temperature in the supply steam is not measured independently as required in the draft Rule. As noted above, these boilers have no physical mechanism for producing superheated steam, and so pressure or temperature alone should suffice. Going forward we will comply with the Ruling, of course, which requires both pressure and temperature measurement.

- Neither temperature nor pressure nor mass flow is measured directly on the feedwater inlet, as required by the draft Rule. The values are surmised as discussed above.



66 Jackson St, Littleton, NH 03561 | 40 So. River Rd #35, Bedford, NH 03110 | Ph: 603.444.6578 | www.yeatonassociates.com

**USEFUL THERMAL ENERGY: SEPTEMBER 2014**

| | September 2014 | | | | |
|---|---|---|---|---|---|
| Day | Daily Steam Production (thousands of lbs) | Supply Steam Pressure (PSI Gauge) | Supply Steam Specific Enthalpy (Btu/lb) | Feedwater Specific Enthalpy @ 195˚F (Btu/lb) | Daily Useful Thermal Energy (minus 2%) (Btu) |
| 1-Sep | 30 | 65.5 | 1,184.03 | 163.21 | 30,012,167.7 |
| 2 | 27 | 66.4 | 1,184.26 | 163.21 | 27,016,916.3 |
| 3 | 30 | 63.6 | 1,183.58 | 163.21 | 29,998,878.0 |
| 4 | 33 | 63.2 | 1,183.58 | 163.21 | 32,998,765.8 |
| 5 | 29 | 62.8 | 1,183.32 | 163.21 | 28,991,409.6 |
| 6 | 28 | 67.3 | 1,184.48 | 163.21 | 28,023,729.2 |
| 7 | 31 | 64.6 | 1,183.81 | 163.21 | 31,005,724.0 |
| 8 | 35 | 64.6 | 1,183.81 | 163.21 | 35,006,462.6 |
| 9 | 34 | 65.4 | 1,184.03 | 163.21 | 34,013,790.0 |
| 10 | 35 | 62.8 | 1,183.32 | 163.21 | 34,989,632.3 |
| 11 | 32 | 60.9 | 1,182.79 | 163.21 | 31,973,873.3 |
| 12 | 37 | 69.1 | 1,184.93 | 163.21 | 37,047,706.2 |
| 13 | 36 | 65.5 | 1,184.03 | 163.21 | 36,014,601.2 |
| 14 | 36 | 66.4 | 1,184.26 | 163.21 | 36,022,555.1 |
| 15 | 39 | 67.3 | 1,184.48 | 163.21 | 39,033,051.4 |
| 16 | 36 | 61.8 | 1,183.05 | 163.21 | 35,979,971.8 |
| 17 | 37.5 | 65.4 | 1,184.03 | 163.21 | 37,515,209.6 |
| 18 | 37.5 | 63.1 | 1,183.58 | 163.21 | 37,498,597.5 |
| 19 | 41 | 63.1 | 1,183.58 | 163.21 | 40,998,466.6 |
| 20 | 38 | 60.8 | 1,182.79 | 163.21 | 37,968,974.5 |
| 21 | 33 | 62.8 | 1,183.32 | 163.21 | 32,990,224.8 |
| 22 | 35 | 63.6 | 1,183.58 | 163.21 | 34,998,691.0 |
| 23 | 36 | 62.8 | 1,183.32 | 163.21 | 35,989,336.1 |
| 24 | 38 | 69.1 | 1,184.93 | 163.21 | 38,048,995.5 |
| 25 | 35 | 65.5 | 1,184.03 | 163.21 | 35,014,195.6 |
| 26 | 32 | 64.5 | 1,183.81 | 163.21 | 32,005,908.7 |
| 27 | 32 | 63.6 | 1,183.58 | 163.21 | 31,998,803.2 |
| 28 | 33 | 65.5 | 1,184.03 | 163.21 | 33,013,384.4 |
| 29 | 34 | 66.4 | 1,184.26 | 163.21 | 34,021,302.0 |
| 30 | 33 | 63.6 | 1,183.58 | 163.21 | 32,998,765.8 |
| **Monthly Total (Btu)** | | | | | **1,023,190,089.9** |
| **Monthly Total (MWh)** | | | | | **299.9** |

Notes: Shaded cells represent estimated values because no recorded data is available.



66 Jackson St, Littleton, NH 03561 | 40 So. River Rd #35, Bedford, NH 03110 | Ph: 603.444.6578 | www.yeatonassociates.com

❖ **Measurement of Useful Thermal Energy: March 21, 2014 through August, 2014**

**Available Digitally Tracked Data**

- No digitally recorded data is available for this period

**Methodology**

Step 1. Compare fuel consumed during September with MWh of Useful thermal Energy produced during September (see Table "Useful Thermal Energy: September" above). Derive the ratio of (Useful Thermal Energy) to (Tons of fuel).

Step 2. Multiply the September ratio (Useful Thermal Energy)/(Tons of fuel) by the fuel consumed in each month to estimate the Useful Thermal Energy produced during that particular month.

**Calculation**

| Biomass Deliveries | | | |
|---|---|---|---|
| **Date** | **Delivery (Tons)** | **Monthly Consumption (Tons)** | **Estimated Useful Thermal Energy (MWh)** |
| 3/24/2014 | 36.55 | 74.03 | 128.11 |
| 3/28/2014 | 37.48 | | |
| 4/3/2014 | 35.40 | 190.02 | 328.83 |
| 4/14/2014 | 28.78 | | |
| 4/18/2014 | 31.35 | | |
| 4/21/2014 | 31.97 | | |
| 4/23/2014 | 32.54 | | |
| 4/28/2014 | 29.98 | | |
| 5/5/2014 | 31.75 | 193.46 | 334.79 |
| 5/9/2014 | 32.42 | | |
| 5/16/2014 | 32.68 | | |
| 5/20/2014 | 31.11 | | |
| 5/27/2014 | 33.11 | | |
| 5/28/2014 | 32.39 | | |
| 6/5/2014 | 28.94 | 157.37 | 272.33 |
| 6/5/2014 | 30.61 | | |
| 6/16/2014 | 31.65 | | |
| 6/27/2014 | 33.27 | | |
| 6/30/2014 | 32.90 | | |
| 7/8/2014 | 34.63 | 104.29 | 180.48 |
| 7/16/2014 | 34.86 | | |
| 7/23/2014 | 34.80 | | |
| 8/6/2014 | 34.57 | 105.38 | 182.36 |
| 8/12/2014 | 34.79 | | |
| 8/26/2014 | 36.02 | | |
| 9/3/2014 | 33.90 | 173.30 | 299.90 |
| 9/4/2014 | 34.83 | | |
| 9/11/2014 | 34.26 | | |
| 9/23/2014 | 35.67 | | |
| 9/23/2014 | 34.64 | | |



66 Jackson St, Littleton, NH 03561 | 40 So. River Rd #35, Bedford, NH 03110 | Ph: 603.444.6578 | www.yeatonassociates.com