Concord Steam Corporation

DG 08-107

Response to Record Request

ORIGINAL
N.H.P.U.C. Case No. DG 08-107
Exhibit No. #3
Witness Peter Bloomfield
DO NOT REMOVE FROM FILE

Date of Request: February 25, 2009 Date of Response: March 4, 2009
Exhibit No.: Exhibit 3 Witness: Peter Bloomfield

REQUEST: Provide a copy in redlined form showing the final changes to the Steam Purchase Agreement.

RESPONSE: A copy of the redlined agreement is attached.

STEAM PURCHASE AGREEMENT

This Steam Purchase Agreement (this "Agreement") is effective upon execution by both **Concord Power and Steam, LLC**, a New Hampshire limited liability company ("Cogen" or the "Seller"), and **Concord Steam Corporation**, a New Hampshire corporation ("CSC" or the "Buyer"). The Buyer and Seller together shall be known as the "Parties" or, individually, as the "Party."

WHEREAS Seller is in the business of manufacturing and selling steam and electricity; and

WHEREAS Buyer owns and operates a system for the distribution of steam within the City of Concord, New Hampshire, which it may improve or expand from time to time ("Buyer's Facility"); and

WHEREAS Buyer distributes and sells steam at retail for use by its customers, subject to the regulatory authority of the New Hampshire Public Utilities Commission; and

WHEREAS Seller has agreed to supply steam to Buyer from a biomass-fired steam plant to be constructed on South Main St. in Concord, NH, which plant will be owned by Seller; and

WHEREAS Buyer desires to purchase all or substantially all of its steam requirements from Seller and Seller desires to supply Buyer with all or substantially all of its steam requirements.

NOW THEREFORE, in consideration of the mutual covenants and conditions set forth below, Buyer and Seller, each intending to be legally bound, hereby agree as follows:

Article 1
DEFINITIONS

1.1 Actual Cost of Steam: The cost of all steam delivered to the Buyer by Seller during a given Service Year, calculated in accordance with Section 7, but using the actual volume of steam delivered, the capacity costs properly allocable to the Buyer pursuant to Section 7.2, the operating and maintenance charges associated with the volume of steam actually delivered and fuel charges for the volume of steam actually delivered during the Service Year.

1.2 Annual Reconciliations: The process by which Buyer and Seller reconcile and offset amounts due each other as provided in Section 2.6.

1.3 Back-Up Boilers: The auxiliary or standby boilers and related equipment described on Schedule 2 that are to be owned by Buyer but interconnected to Seller's plant.

1.4 Back-Up Steam Meter: Has the meaning set forth in Section 6.1.

1.5 Bench Test: A bench test conducted on metering equipment, in accordance with steam utility industry practice, which under current practice would require that the meter be removed from service and sent to an authorized service and testing laboratory.

1.6 Commercial Operation Date: The date that Seller certifies in writing to Buyer that Seller's plant is capable of producing steam in accordance with the material terms and conditions of this Agreement and that Seller has accepted (subject to customary punch list items that do not affect reliability) all major systems in Seller's plant from its contractors, subcontractors, and vendors.

1.7 Delivery Term: The period commencing on the Commercial Operation Date and, unless extended pursuant to the provisions of Section 8.2 or sooner terminated in accordance with the provisions of Section 8.3, ending on the thirtieth (30th) anniversary of the Commercial Operation Date. The first thirty years of the Delivery Term is sometimes referred to as the Initial Delivery Term, and the Delivery Term as extended is sometimes referred to as the Extended Delivery Term.

1.8 Good Utility Practice: Those practices, methods and acts that are commonly used in the independent energy industry in the Northeastern portion of the United States at the time in question to design, construct, equip, operate, measure, forecast, schedule, test and maintain the relevant facilities and related equipment lawfully and with safety, reliability, efficiency, economy and expedition or, in the absence of such practices, methods and acts, those practices, methods and acts that, at the time in question, in the exercise of reasonable judgment in light of the facts then known, would have been expected to accomplish the desired result consistent with Applicable Law, good business practices, safety, reliability, efficiency, economy and expedition. Good Utility Practice is not intended to require optimum practices, methods or acts, but rather includes a range of acceptable practices, methods or acts that are expected within the energy industry to accomplish the desired results, having due regard for, among other things, preservation of manufacturers' warranties and operating instructions and the requirements of governmental authorities.

1.9 GDPIPD: The Gross Domestic Product Implicit Price Deflator as finally calculated and published by the Bureau of Economic Analysis of the United States Department of Commerce.

1.10 Maximum Annual Steam Take: 360,000 MMBtus.

1.11 Maximum Hourly Demand: 180 MMBtus in any given hour.

1.12 Primary Steam Meter: Has the meaning set forth in Section 6.1.

1.13 Debt Service Payment: The amount of actual debt incurred for and allocated to the capital costs required to construct the power plant located at 291 South Main Street, Concord, New Hampshire, excluding the capital associated with the installation of the Seller's plant's turbine generators and all of their subsystems except a reasonable allocation for station electrical service.

1.14 PUC: The New Hampshire Public Utilities Commission.

1.15 Replacement Steam: Any steam generated by Buyer or purchased by Buyer from any source other than Seller that is needed to meet Buyer's requirements that have not been met by Seller. Replacement Steam shall not include steam generated or purchased by Buyer during any period when Seller was able to meet Buyer's requirements but Buyer nevertheless exercised its right pursuant to Section 2.5 to generate steam itself or purchase steam from any other source.

1.16 Replacement Steam Cost: The positive difference, if any, between (i) all costs incurred by Buyer for Replacement Steam and (ii) the product of the volume of Replacement Steam and the Steam Price that would have applied had such steam been delivered by the Seller.

1.17 Service Year: Each twelve month period beginning November 1 and ending October 31 during the Delivery Term. The first and last Service Year may be less than a twelve month period, and shall consist of the period from the Commercial Operation date until the succeeding October 31, in the case of the first Service Year, and from the last November 1 during the Delivery Term until the end of the Delivery Term, in the case of the last Service Year.

1.18 Steam Delivery Point: The location where the Seller's steam transmission or distribution facilities interface with Buyer's Facility.

1.19 Steam Price: The price for steam sold under this Agreement, as set forth- in Section 7.

1.20 Steam Sales Percentage: The percentage used to calculate the appropriate amount of the fuel, capacity and O&M charge that should be charged to steam sales. The percentage consists of two components; 1) The percentage of the total wood fired steam that is sent into the distribution system determined by dividing the annual MMBtu value of steam sent into the steam distribution system divided by the maximum wood fired steam production capacity (estimated to be 2,136,000 MMBtus calculated as follows: 180,000 ~~Btu~~lb/Hr x 1,453 Btu/Lb (24 Hr/day x 365 days/yr x 93.2306% wood boiler capacity factor ÷ 1,000,000 Btu/MMBtu ~~wood boiler capacity factor~~), plus 2) the steam sales percentage share of the total amount of steam used to generate station service power.

Article 2
PURCHASE AND SALE OF STEAM

2.1 Purchase and Sale of Steam. Buyer hereby agrees to purchase from Seller, and Seller hereby agrees to sell to Buyer, all of Buyer's steam requirements, except as provided in Section 2.5.

2.2 Delivery of Steam. Steam purchased under this Agreement shall be delivered by Seller to the Steam Delivery Point, at which point title to and risk of loss shall transfer from Seller to Buyer. All steam delivered by Seller shall meet the specifications set forth on Schedule 1 to this Agreement. The Seller shall adjust the pressure of the steam delivered to Buyer as and when requested by Buyer within the range specified in Schedule 1. Seller shall measure the

actual amount of steam supplied to Buyer using a meter at the Steam Delivery Point in accordance with Article 6.

2.3 Operation of Plant.

2.3.1 Operation/Maintenance of Plant. Seller shall operate and maintain the Seller's plant, or shall cause it to be operated and maintained, in a manner that complies in all material respects with Good Utility Practices, the requirements of the ISO, NERC and any applicable transmission provider, the requirements of this Agreement and all applicable laws and regulations, permits and insurance requirements. Seller agrees to operate and maintain the plant, and all other equipment and systems interconnecting with the Buyer's Facility in all material respects in accordance with any applicable manufacturer's specifications. Seller shall keep records with respect to inspections, maintenance, and repairs thereto consistent with Good Utility Practice. Upon request by Buyer, Seller shall make available to Buyer during Seller's regular business hours all plans and records of such inspections, maintenance, and repairs.

2.3.2 Planned Outages. Seller may temporarily cease steam production to conduct reasonable, planned maintenance. On or before the Commercial Operation Date, and before the commencement of each additional Service Year, Seller shall provide to Buyer a schedule of all outages planned for the following Service Year. If Seller halts steam production for purposes of conducting planned maintenance, Seller shall provide to Buyer written notice of such planned maintenance thirty (30) days prior to commencing the outage. Such notice shall include a reasonable estimate of the anticipated duration of the outage. Once the outage has begun, Seller shall keep Buyer informed of the status of the maintenance being undertaken and any changes in the anticipated date on which the Seller's plant will return to commercial operation.

2.3.3 Unplanned Outages. If Seller experiences an unplanned outage, it shall notify Buyer of the outage as soon as reasonably possible, but in no event later than two hours of becoming aware of such outage, as well as the reason for the outage. The Seller shall keep Buyer informed on an ongoing basis of the expected duration of any unplanned outage and any change in the anticipated duration of such outage. In the event of an unplanned outage or reduction in steam output of the Seller's plant affecting the quantity of steam available for delivery to Buyer or an extended planned outage, Seller shall take action to restore the plant to normal operation as soon as possible in accordance with Good Utility Practice. No expenses incurred by Seller for such purposes shall be included as part of any adjustment to the charges to Buyer under this Agreement, it being the Parties' intention that all such remedial costs shall be borne solely by the Seller.

2.4 Seller's Failure to Supply Steam. Without in any way limiting Seller's obligation pursuant to Section 2.1, during any period when Seller's plant is unable to deliver sufficient steam to meet Buyer's requirements, whether a planned or unplanned outage, Buyer may require that Seller generate Replacement Steam using the Backup Boilers and Seller's employees and/or agents or Buyer may purchase steam from any other available source. As part of the Annual Reconciliation, Seller shall reimburse Buyer for all Replacement Steam Costs in excess of what the Buyer's steam costs would have been during the replacement period, up to the maximum

hourly demand based on the average annual steam cost (average steam cost calculation to exclude steam costs incurred during replacement periods).

2.5 Additional Purchases by Buyer. The Buyer may in its sole and absolute discretion elect to generate steam itself using its own facilities or purchase steam from any other source. In addition, the Buyer may in its sole and absolute discretion direct the Seller to generate steam using the Back-Up Boilers. If the Buyer so directs the Seller, the Seller shall not be required to actually use the Back-Up Boilers, but the Steam Price for all steam during any such period shall be the same as if all steam purchased was Excess Steam as set forth in Section 7.5.

2.6 Reconciliation.

2.6.1 Annual Reconciliation. Within sixty (60) days of the end of each Service Year, Buyer and Seller shall reconcile and offset amounts due each other as provided in Sections 2.4 and 2.6.2. At the end of the Delivery Term, the Annual Reconciliation will be completed no later than sixty (60) days after the expiration of the Delivery Term.

2.6.2 Within thirty (30) days after the end of each Service Year, the Seller shall provide the Buyer with a written calculation and supporting documentation setting forth its calculation of the Fuel Charge for all steam delivered to Buyer during such Service Year. The difference between the Actual Fuel Charge and the amount billed by Seller to Buyer for all steam delivered during the Service Year shall be included in the amounts set forth in the Annual Reconciliation, which shall be adjusted accordingly. In order to reduce the extent to which an annual reconciliation will have an over- or under-collection for the Fuel Charge, the Parties agree to adjust the steam price on a monthly basis as needed.

2.7 Back-Up Boilers. The Back-Up Boilers shall be owned by Buyer, but shall be operated and maintained by Seller using Good Utility Practice. Seller shall maintain the Back-Up Boilers in hot standby mode consistent with Good Utility Practice. The Back-Up Boilers may be used by the Seller as necessary to meet Buyer's steam requirements under this Agreement. Upon Buyer's request, Seller shall make any improvements to the Back-Up Boilers or shall increase the capacity of the Back-Up Boilers. Buyer shall promptly reimburse Seller for the cost of maintaining the Back-Up Boilers, any improvements made to the Back-Up Boilers, and increasing the capacity of the Back-Up Boilers, upon the presentation of reasonable supporting documentation of such cost. Seller shall bear the cost of operating the Back-Up Boilers, including but not limited to the cost of fuel and any labor expense.

Article 3
MODIFICATION TO BUYER'S REQUIREMENTS

Buyer shall notify Seller in writing of its estimated steam requirements for the coming Service Year annually at least by October 1. Buyer shall also provide written notice to Seller of any anticipated changes of more than ten percent (10%) on an annual basis in Buyer's estimated requirements for steam as soon as practicable upon Buyer's learning of such occurrence, but in no event later than within fifteen (15) days of such modification, in accordance with the Notice

section of this Agreement. Such notices shall not create a binding obligation on the Buyer to purchase such quantity of steam, but are intended to assist Seller with its own planning efforts.

Article 4
BILLING

4.1 Billing. Seller shall deliver an invoice to Buyer each month setting forth the steam delivered to Buyer during the previous month, the Steam Price applicable to such deliveries, and the total amount due Seller. Buyer will remit full payment for each invoice to Seller within thirty (30) calendar days following the date of the applicable invoice. If Buyer fails to make payment of any undisputed charges when payment is due, Buyer shall pay Seller, in addition to the amount owed, interest on such amounts which will accrue at the prime rate, as published in the Wall Street Journal plus two percent (2%). The Steam Price will be determined and calculated as set forth in Section 7. The quantity of steam consumed by Buyer shall be determined by reading the Primary Steam Meter.

4.2 Books and Records. During the term of this Agreement and for at least five (5) years thereafter, Seller shall maintain books and records necessary to substantiate that charges and calculations set forth on all invoices to Buyer were valid and proper. Seller's books and records shall be kept in accordance with generally accepted accounting principles, consistently applied. Buyer, including any of its representatives, has the right, during normal business hours and upon three (3) days advance written notice to examine Seller's books and records and to discuss them with Seller's officers, employees, representatives and independent public accountants as Buyer deems necessary.

Article 5
STARTUP AND TESTING

Seller shall coordinate with Buyer a schedule for testing of Seller's plant, and Seller shall not cause any disruption of Buyer's operations. Seller shall be responsible for all fuel costs associated with any use of Seller's plant before the Commercial Operation Date. Buyer shall not be responsible to pay for any steam produced by Seller's plant before the Commercial Operation Date. The Testing shall include all steps necessary to allow Buyer to determine that the steam delivered by Seller meets the specifications set forth on Schedule 1 and is otherwise reasonably satisfactory to Buyer. Upon request, Seller shall provide Buyer with a copy of the results of any testing.

Article 6
METERING

6.1 Meters. There shall be two (2) meters located at the Steam Delivery Point, which shall be of a type that is commonly utilized by utilities and/or other providers of thermal energy for such purpose and shall be custody quality, mass flow meters, that are pressure and temperature compensated with a 20:1 turndown capability. The Primary Steam Meter shall be a meter installed and maintained by Seller at Seller's expense and shall be owned by and be the property of the Seller. Seller shall also install a Back-Up Steam Meter at its expense. Buyer shall have sole access to and control of the Back-Up Steam Meter, and shall be responsible for

maintaining it. The Back-Up meter shall be owned by and be the property of the Buyer. The Primary Steam Meter and the Back-Up Steam Meter shall be installed in such a manner that they transmit hourly data regarding steam flows to Buyer and Seller via electronic means in such manner as is reasonably acceptable to both Buyer and Seller.

6.2 Reading of Meters.

6.2.1 Procedure. The meters installed pursuant to the terms of this Agreement shall be read by Seller on the last business day of each month. Such readings shall be for the purpose of determining the net steam output delivered to Buyer since the immediately preceding readings. Buyer will have a representative witness the readings, and Seller shall make a good faith effort to coordinate with Buyer to arrange a mutually convenient time for the readings to occur. Seller shall keep a record of all information obtained at the time of the readings including, but not limited to total MMBtus, total lbs, maximum and minimum lb/hr, maximum temperature and pressure, alarm setpoints, number of times and hours temperature limits exceeded, and hourly flow readings for entire month.

6.2.2 Inaccuracies in Metering System. The Primary Steam Meter reading shall be used for billing purposes unless the readings from the Primary Steam Meter and the Back-up Meter differ by three percent (3%) or more, in which event the metered amount shall be compared to calculated usage. Calculated usage means a computation intended to determine the amount of steam reasonably expected to be delivered by Seller to serve the Buyer's customers' requirements during a period with the same weather as occurred during the relevant period. For purposes of determining the weather for the relevant period, the Parties shall use heating degree days as recorded by the National Weather Service for Concord, NH (or if such data is not available, the data for Manchester, NH). Steam usage shall be calculated by analyzing and comparing previous months' usage, as adjusted for heating degree days. To determine the calculated usage, the Parties shall use the same methodology used by the Buyer for ratemaking purposes before the PUC to determine weather normalized usage. The difference between the previous payments by Buyer for the period of inaccuracy and the recalculated amount shall be offset against or added to the next payment to Seller, as appropriate. If the period of inaccuracy cannot be determined, it shall be deemed to have begun on the date which is midway between the date the meter was found to be inaccurate and the date of the last meter reading accepted by the Parties as accurate, but in no event more than six (6) months. In no event will any such adjustment be made for any period before the date on which the relevant metering system was last tested and found to be functioning properly and to be accurate within plus or minus three percent (3%).

6.2.3 Seals. The meters shall be secured and sealed in a manner such that the seal to the Primary Steam Meter can be broken only by Seller and the seal to the Back-Up Steam Meter can be broken only by Buyer. However, neither Party shall break the seal to the meter owned by it without affording the other Party a reasonable opportunity to be present. A written notice delivered at least 48 hours in advance shall be deemed to be a reasonable opportunity for purposes of this provision.

6.2.4 Repair, Replacement, Recalibration of Metering System. Any repair, replacement, or recalibration of the Primary Steam Meter shall be performed by the Seller at the Seller's expense; provided, however, that the Buyer shall have the right to oversee any such repair, replacement or recalibration. Seller shall maintain a factory calibrated spare meter in stock on its premises. Any repair, replacement, or recalibration of the Back-Up Steam Meter shall be performed by the Buyer at the Buyer's expense; provided, however, that the Seller shall have the right to oversee any such repair, replacement or recalibration. Buyer shall maintain a factory calibrated spare meter in stock on its premises. The spare meter assembly maintained by the Seller shall include the primary device, pressure and temperature transmitters and a flow totalizer/computer.

6.2.5 Meter testing.

6.2.5.1 Each Party shall calibrate the meter that is owned by it on an annual basis and shall Bench Test such meter at least once every three (3) years. Calibration of the steam flow meters shall be carried out on location through in place instrumentation adjustments.

6.2.5.2 Any Party may at any time request that a meter be Bench Tested in addition to any calibration or other periodic Bench Test required under this Agreement. Such additional Bench Test(s) shall be at the sole expense of the requesting Party unless the test indicates the steam meter in question is inaccurate by more than one percent (1%), in which case the Party owning such meter will bear the cost of the test and service that is required to repair or replace the meter.

6.2.6 Metering or Billing Disputes. If the Parties fail to agree on a correct meter reading or dispute any invoice for payment or the calculation of amounts due on the Annual Reconciliation, the Party disputing the meter reading or bill shall pay the undisputed amount in a timely manner and the disputed matter shall be resolved according to the terms and conditions detailed in Article 19 of this Agreement. Any over or under payment, as determined pursuant to Article 19, shall be paid or refunded, as the case may be, with interest at the prime rate plus one percent (1%).

Article 7
STEAM PRICE

7.1 Steam Price. The price per MMBtu for steam purchased by the Buyer under this Agreement shall be calculated annually pursuant to this Article 7. The price shall consist of a Capacity Charge (pursuant to Section 7.2), an O&M Charge (pursuant to Section 7.3) and a Fuel Charge (pursuant to Section 7.4). The difference between the steam price as established at the beginning of each Service Year and the per MMBtu Actual Cost of Steam shall be included in the Annual Reconciliation pursuant to Section 2.6.. Any payments, credits, or other benefits having economic value to the Seller that are created by the sale of steam to the Buyer shall be

applied to reduce the price of steam charged to the Buyer. These benefits include, but are not limited to, renewable energy credits, greenhouse gas credits, and combined heat and power credits.

7.2 Capacity Charge.

7.2.1 The Buyer shall pay the Seller a monthly Capacity Charge, which shall be calculated as follows.

7.2.1.1 For the first 15 years of the Agreement, the Capacity Charge shall be the Debt Service Payment multiplied by the Steam Sales Percentage, multiplied by 150% and divided by the estimated amount of steam forecast to be sold over the Service ~~y~~Year in MMBtu~~.~~, and shall be expressed as $/MMBtu. The Steam Sales Percentage as it affects capacity shall initially be 13.88%. The Steam Sales Percentage for capacity shall be determined every year on a rolling three year average, beginning effective as of the first day of the beginning of the third Service Year by averaging the previous two years.

7.2.1.2 For the remainder of the Initial Delivery Term of the Agreement, the Capacity Charge shall be $1,500,000 multiplied by the Steam Sales Percentage, and divided by the estimated amount of steam forecast to be sold over the Service ~~y~~Year in MMBtu.

7.2.1.3 For any Extended Delivery Term, the Capacity Charge shall be calculated as follows: The depreciated book value (straight-line method of depreciation computed by dividing the cost of the asset, less net salvage value, by the expected service life) of the power plant multiplied by 10% multiplied by the Steam Sales Percentage and divided by the estimated amount of steam forecast to be sold over the Service Y~~y~~ear in MMBtu.

7.2.1.4 If, consistent with Good Utility Practice, and consented to by both Parties (which consent shall not be unreasonably withheld), capital improvements of $100,000 or more to the Seller's plant are needed to meet the steam requirements of the Buyer, or will improve the efficiency or economics of the plant, the Capacity Charge shall be increased according to the following formula:
[(50% of the cost of the improvement X 10%) + (50% of the cost of the improvement X CPS's cost of debt)] X Steam Sales Percentage. Seller shall cooperate with the Buyer to structure

the Capacity Charge in a manner that is recoverable through the Buyer's rates consistent with applicable New Hampshire law. At the end of the above projected debt service period for financing the improvement, the capacity charge shall be modified as per 7.2.1.3.

7.3 Operation and Maintenance Charge. The Operation and Maintenance ("O&M") Charge shall be calculated on a per MMBtu basis ($/MMBtu) as of the beginning of every Service Year based on the prior Service Year's O&M expenses incurred by the Seller, adjusted for the change in the GDPIPD to reflect inflation from September 1 preceding the Service Year from which such expenses are derived through August 31 of such Service Year. To calculate the O&M Charge, the total annual cost of O&M incurred in accordance with Good Utility Practices for the Seller's plant's steam system (including usual and customary administrative and general expenses and overheads) will be multiplied by the Steam Sales Percentage and divided by the projected annual steam sales in MMBtu to establish the average unit O&M cost in $/MMBtu for all steam sold to Buyer. The O&M Charge will be based on all non-fuel related expenses for the ongoing operation and maintenance of the steam plant, including but not limited to: labor, insurance, parts, consumables, purchased power, real estate taxes, ongoing permit fees and other non-fuel related expenses incurred in normal operation of the boiler and fuel system. The O&M charge shall not include O&M costs for the turbine generators or any turbine generator auxiliary equipment (such as the circulating cooling water system, switchgear and main 34.5 kV transformers), expenses related to the sale of electrical power, renewable energy certificates, electric capacity, or other electric power products or attributes, or fines or penalties levied against the plant or the Seller. O&M shall be adjusted (i) to normalize non-recurring expenses, which shall be amortized over their useful life or based on their reasonably expected frequency and (ii) to adjust for out-of-period items such as prepayments or the like. Any amounts that are amortized or otherwise included in O&M in a Service Year other than the one in which they were incurred shall be adjusted to include a return on the unamortized or deferred portion at the rate of the Buyer's last allowed overall cost of capital, as determined by the PUC. The O&M Charge will not be reconciled with actual costs for past years, but rather will be adjusted prospectively only. However, if actual data is not available for use in determining the O&M Charge, estimated data may be used initially, in which case the O&M Charge shall be adjusted and reconciled when actual data becomes available.

7.4 Fuel Charge.

7.4.1 The Fuel Charge shall be calculated on a per MMBtu basis as of the beginning of every Service Year. The $/MMbtu value shall be based on the total projected annual cost of biomass incurred in accordance with Good Utility Practices for fuel consumed, including an equitable share of the cost of fuel consumed to generate electricity used internally by the Seller's plant, as follows:

The Fuel Charge ($/MMBtu) shall be calculated at the beginning of each Service Year in accordance with the following formula:

$$FC_S = ((FC_T \times PCT_S) + FC_F)/H_S$$

Where:

FC_S is the cost of wood fuel allocated to steam sales and billed to Buyer;

FC_F is the allowed cost of fossil fuel (natural gas) burned in the Back-Up Boilers as defined by Section 7.4;

FC_T is the total cost of wood fuel burned in the main boiler (including any brokerage expense incurred) as properly recorded as wood fuel expense in accordance with Generally Accepted Accounting Principles (GAAP), and

PCT_S is the percentage of the steam produced by the main boiler which is allocated to steam sales.

Determination of the Steam Sales Percentage

For billing purposes under this Agreement, PCT_S will initially be fixed at 13.38%. At the end of each Service Year ~~calendar year~~ during the Term of Service the actual PCT_S will be calculated in accordance with the following formula:

$$PCT_S = [(H_S-H_F)/H_B] + \{[(H_B-(H_S-H_F))/H_B] \times ((E_G - E_N)/E_G) \times ((H_S-H_F)/H_B)\}$$

Where:

H_B is the maximum wood fired steam production capacity (estimated to be 2,136,000 MMBtus, calculated as follows: 180,000 lb/Hr x 1,453 Btu/Lb (24 Hr/day x 365 days/yr x 93.2306% wood boiler capacity factor ÷ 1,000,000 Btu/MMBtu)~~is the total quantity of steam, measured in MMBtu, produced in the wood fired boiler as registered by the meter designated as M1 on the steam flow diagram attached hereto as part of this Appendix A~~;

H_S is the total quantity of steam, measured in MMBtu, entering the steam distribution system as registered by the meter designated as M2 on the steam flow diagram attached hereto as part of this Appendix A;

H_F is the total quantity of steam, measured in MMBtu, generated by the fossil fuel (natural gas) fired Back-Up boilers as registered by the meter designated as M3 on the steam flow diagram attached hereto as part of this Appendix A;

E_N is the net electric output of the Unit, measured in KWhs, as registered by the substation meter compensated if necessary to reflect the output at the low side of the substation transformers;

E_G is the gross electric output of the Unit, measured in KWhs, as registered by the output meters of each of the turbine generators totalized.

The Fuel Charge for the previous Service Year ~~calendar year~~ will then be trued up pursuant to Section 7.4.3 to reflect this actual PCT_S.

At the end of each Service Year~~calendar year~~, the Fuel Charge ~~for the months of January through December (or the actual months in the calendar year if the Term of Service begins on a date~~

~~other than January 1 or ends on a date other than December 31)~~ shall be adjusted in accordance with Good Utility Practice to account for deterioration of wood fuel inventory over the Service Year ~~calendar year~~ at issue.

7.4.2 The cost of natural gas shall be based on the assumption that the Back-Up Boilers will be operated for five (5) days in May and three (3) days in September and shall be based on the steam needs of the Buyer's district heating system only. The fuel charge will be based on the forecasted price of gas for these two periods, and the difference between actual cost of gas on a $/therm basis and forecast values will be reconciled each year at the beginning of the new Service Year as part of the reconciliation set forth in Section 2.6. Any adjustment in the Fuel Charge for the cost of natural gas shall be based only on the actual cost of gas on a per MMBtu basis and not on the volume of gas actually used by the Seller, regardless of the extent to which the Seller actually operates the Back-Up Boilers during any Service Year. The Parties anticipate that this pricing mechanism will incentivize the Seller to maximize the extent to which it generates steam using wood fuel, rather than gas.

7.4.3 Except as set forth in Section 2.6, the Fuel Charge shall be reconciled at least annually to reflect the Seller's actual cost of fuel. Such reconciliation shall be performed in a manner consistent with the Buyer's cost of energy rate adjustment methodology, it being the Parties' intent that the Seller shall recover through the Fuel Charge its actual cost of fuel, except to the extent that the quantity of natural gas consumed for the Back-Up Boilers varies from the assumptions set forth in Section 7.4.2. Any credit or surcharge necessitated by the annual Fuel Charge reconciliation shall be paid or refunded, as the case may be, to the Buyer as an adjustment to the Fuel Charge for the Service Year after the Service Year in which such credit or surcharge accrued without interest; provided, however, that if the PUC orders the Buyer to accrue interest on any over or under collection under its cost of energy rate mechanism, the Parties shall institute a similar interest mechanism for purposes of this reconciliation process.

7.5 Excess Steam. Notwithstanding anything to the contrary in this Agreement, if the Seller is required to supply Buyer with steam in excess of either the Maximum Hourly Demand or the Maximum Annual Steam Take ("Excess Steam"), in addition to the O&M Charge and the Capacity Charge, the Buyer shall pay Seller for all such Excess Steam a Fuel Charge equal to the actual cost of fuel used to produce the steam from the Back-Up Boilers. The Fuel Charge for all Excess Steam shall be based on the fuel cost that would be incurred to produce the Excess Steam from the Back-Up Boilers regardless of whether the Seller actually uses the Back-Up Boilers to produce any or all of the Excess Steam. The Fuel Charge for Excess Steam ~~is~~ shall be in place of, rather than in addition to, the Fuel Charge that would otherwise be payable for such steam pursuant to Section 7.4.

Article 8
TERM

8.1 Delivery Term. The Delivery Term shall commence on the Commercial Operation Date and shall end on the date that is thirty (30) years thereafter unless extended or terminated early as provided herein.

8.2 Delivery Term Extensions. Buyer may, at its sole option, extend the Delivery Term for an additional twenty (20) years by giving the Seller written notice of such extension at least one (1) year prior to the expiration of the Delivery Term.

8.3 Termination. This Agreement may be terminated as follows:

8.3.1 By either Party, if the other Party breaches any material obligation under this Agreement and such breach is not remedied within thirty (30) days after written notice specifying such default is provided to the defaulting Party. However, if any non-monetary default is not curable within thirty (30) days and the defaulting Party is diligently pursuing the cure of the default, the non-defaulting party shall not terminate this Agreement.

8.3.2 By Buyer, if Seller is unable to perform its obligations under this Agreement because of a Force Majeure for a period of more than six (6) months.

8.3.3 By Buyer, if Seller fails to achieve commercial operation of its plant within 24 months of receiving all required permits and governmental authorizations.

8.3.4 By Buyer in the event of foreclosure proceedings initiated with respect to the property on which the plant is located or in the event bankruptcy or other reorganization proceedings are initiated in respect to Seller.

8.3.5 In the event that this Agreement is terminated for any reason, Buyer shall have complete access to the Back-Up Boilers and may remove them or operate and maintain them in place at its sole expense.

8.4 Obligations prior to Termination. During the period between a notice of termination and the effective date of termination, each Party shall continue to perform its obligations hereunder in good faith.

8.5 Obligations on Termination. Termination of this Agreement for any reason provided herein shall not relieve either Party from its obligation to perform up to the effective date of such termination or to perform such obligations as may survive termination. If payments attributable to periods after the termination of this Agreement have been made before the termination of this Agreement, the Party receiving such payments shall refund the payments so attributable promptly after the termination of this Agreement. If payments attributable to periods before the termination remain unpaid upon the termination of this Agreement, the Party required to make such payments shall do so promptly after the termination of this Agreement.

Article 9
TITLE AND RISK OF LOSS

Title to and risk of loss of all steam shall pass from Seller to Buyer at the Steam Delivery Point. Each Party shall indemnify, defend, and hold harmless the other Party from any Claims arising from any act or incident relating to title to the steam occurring during the period when

control and title to the steam is vested in such Party. "Claims" means all claims or actions, threatened or filed, and whether groundless, false or fraudulent, that directly or indirectly relate to the subject matter of an indemnity, and the resulting losses, damages, expenses, attorneys' fees and court costs, whether incurred by settlement or otherwise, and whether such claims or actions are threatened or filed prior to or after the termination of this Agreement. The provisions of this Article shall survive termination of this Agreement.

Article 10
TAXES

Seller shall pay all taxes imposed on or with respect to generation or ownership of the steam prior to and through delivery to the Steam Delivery Point, including any income taxes arising from the sale of steam to Buyer. Buyer shall pay all taxes on, or with respect to, ownership of the steam at and after delivery to the Steam Delivery Point. Taxes shall include, without limitation, all federal, state or local sales, use, consumption, ad valorem, gross receipts, real estate or other taxes, charges or franchise fees that may be imposed by any valid taxing authority on any transaction undertaken pursuant to this Agreement, together with any and all penalties, fines, additions or interest thereon. If for any reason either Party pays taxes, charges or fees that are the responsibility of the other Party, the other Party agrees to reimburse the paying Party for such payment within five (5) business days after receiving the paying party's request for payment.

Article 11
FORCE MAJEURE

11.1 Neither Party shall be liable to the other for failure to perform its obligations hereunder if such failure was caused by Force Majeure.

11.2 The Party whose performance is prevented by Force Majeure must provide notice to the other Party. Initial notice may be given orally. However, written notification with particulars of the event or occurrence is required as soon as reasonably possible. Upon providing written notice to the other Party, the affected Party will be relieved of its obligation to make/accept delivery of steam to the extent and for the duration of the Force Majeure, and neither Party will be deemed to have failed in such obligations to the other during such occurrence or event.

11.3 Force Majeure means an unforeseen occurrence or event beyond the control of the Party claiming excuse, which partially or entirely prevents the Party's performance of its obligations under this Agreement. Force Majeure shall include but not be limited to: (i) physical events such as acts of God, landslides, lightning, floods, earthquakes, fires, storms, which result in failure of transmission or distribution lines, destruction to Seller's plant or Buyer's Facility; (ii) acts of others such as strikes, riots, sabotage, insurrections or wars; (iii) governmental actions such as necessity for compliance with any court order, law, statute, ordinance or regulation promulgated by a governmental authority having jurisdiction but not including any of the foregoing if compliance therewith would be possible by incurring additional expense; and (iv) any other causes whether of the kind herein enumerated or otherwise not reasonably within the

control of the affected Party.

11.4 Seller and Buyer shall make reasonable efforts to avoid Force Majeure and to resolve the event or occurrence once it has occurred in order to resume performance. Neither Party shall be entitled to the benefit of the provision of Force Majeure to the extent the performance is affected by any and all of the following circumstances: (i) the sole or contributory negligence of the party claiming excuse; (ii) the Party claiming excuse failed to remedy the condition and to resume the performance of its covenants and obligations with reasonable dispatch; or (iii) economic hardship.

Article 12
ASSIGNMENT

12.1 Seller may assign this Agreement in whole or in part with the prior written consent of the Buyer, which consent shall not unreasonably be withheld; provided that any such assignee shall agree in writing to be bound by the terms and conditions hereof, and subject to a favorable credit and operational capability review by Buyer, and further provided, however that Seller shall have the unrestricted right to assign its right to receive payment to any third party.

12.2 Buyer shall have right to assign this Agreement with the prior written consent of the Seller, which consent shall not unreasonably be withheld; provided that any such assignee shall agree in writing to be bound by the terms and conditions hereof, and subject to a favorable credit review by Seller and provided Buyer shall have the unrestricted right to assign its rights and obligations to an affiliate subsidiary, parent or successor organization.

Article 13
REPRESENTATIONS, WARRANTIES AND COVENANTS

13.1 Representations, Warranties, and Covenants of Buyer. Buyer represents, warrants, and covenants to Seller as follows:

13.1.1 Buyer represents and warrants that this Agreement, when executed and delivered by Buyer, will be its legal, valid, and binding obligation enforceable against Buyer in accordance with its terms, except to the extent that enforcement may be limited by bankruptcy, insolvency, or other similar laws affecting creditors' rights generally.

13.1.2 The execution and delivery of this Agreement have been duly authorized by Buyer, and such execution and delivery and the performance by Buyer of its obligations hereunder do not and will not violate or cause a breach of any other agreement or obligation to which it is a party or by which it is bound, and no approval or other action by any third party is required in connection with Buyer's execution or performance of this Agreement.

13.1.3 Buyer is duly organized, validly existing, and in good standing under the laws of the jurisdiction of its formation and is qualified to do business in the State of New Hampshire;

13.1.4 Buyer has all regulatory authorizations, permits and licenses necessary to legally perform its obligations under this Agreement;

13.1.5 There is no litigation, claim or judicial or administrative proceeding of any nature, pending or, to Buyer's knowledge, threatened against or affecting Buyer, which if decided against it would be reasonably likely to materially or adversely affect the operation of Buyer's business or its ability to satisfy its obligations under this Agreement.

13.2 Representations, Warranties, and Covenants of Seller. Seller represents, warrants, and covenants to Buyer as follows:

13.2.1 Seller represents and warrants that this Agreement, when executed and delivered by Seller, will be its legal, valid, and binding obligation enforceable against Seller in accordance with its terms, except to the extent that enforcement may be limited by bankruptcy, insolvency, or other similar laws affecting creditors' rights generally.

13.2.2 The execution and delivery of this Agreement have been duly authorized by Seller, and such execution and delivery and the performance by Seller of its obligations hereunder do not and will not violate or cause a breach of any other agreement or obligation to which it is a party or by which it is bound, and no approval or other action by any third party is required in connection with Seller's execution or performance of this Agreement.

13.2.3 Seller is duly organized, validly existing, and in good standing under the laws of the jurisdiction of its formation and is qualified to do business in the State of New Hampshire;

13.2.4 Seller has all regulatory authorizations, permits and licenses necessary to legally perform its obligations under this Agreement;

13.2.5 There is no litigation, claim or judicial or administrative proceeding of any nature, pending or, to Seller's knowledge, threatened against or affecting Seller, which if decided against it would be reasonably likely to materially or adversely affect the operation of Seller's business or its ability to satisfy its obligations under this Agreement.

13.2.6 Seller covenants that all steam sold by it to Buyer under this Agreement shall meet the specifications set forth on Schedule 1.

Article 14
INSURANCE

14.1 Seller shall furnish at its own cost and expense, and maintain in full force and effect at all times during the term of this Agreement, insurance policies underwritten by insurance carriers of recognized international standing and maintaining a "Best" rating of at least A-:VI, protecting:

14.1.1 The legal liability of Seller under the Worker's Compensation Act of any state or other statute or law, to pay claims for personal injuries sustained by its employees, if any, including death resulting therefrom. Employer's liability coverage shall be included with a limit of liability of not less than one million U.S. Dollars ($1,00,000); and

14.1.2 The legal liability of Seller for damage to property and for injuries to or death of any person or persons, such insurance to be written with a limit of not less than $10,000,000 for any one occurrence. Coverage shall be on an occurrence rather than a claims-made basis. Buyer shall be named as an additional insured, with a cross liability endorsement in effect on its behalf.

14.1.3 Boiler and Machinery insurance and Business Interruption insurance shall be carried to cover temporary boiler rental or whatever other costs are necessary to provide steam service in case of major breakdowns or equipment failure.

The minimum insurance coverage amounts set forth above shall increase beginning as of the first day of the fifth Service Year in the Delivery Term and on each fifth anniversary thereafter by at least the increase in the GDPIPD since the last such adjustment, but such amounts shall not be less than the coverage amount then commonly obtained for electric generating plants of similar size and nature.

14.2 Insurance Termination. The Seller's policy of commercial general liability insurance shall not be terminated, canceled or materially reduced in coverage without at least thirty (30) days' prior written notice to Buyer; provided such notice shall be ten (10) days in the case of a failure to pay premiums.

14.3 Waiver of Subrogation. Each Party releases and waives on behalf of itself and on behalf of the insurers of such Party's property, any and all claims and any rights of subrogation of any such insurer against the other Party, its employees (if any) and agents for loss sustained from any peril to property required to be insured against herein, whether or not such insurance is actually in force, or from any peril to property actually insured against, though not required to be under this Agreement. The policies of the respective Parties shall contain an express waiver of subrogation to this effect.

Article 15
INDEMNIFICATION

15.1 Indemnification by Seller. In addition to any indemnification provisions located elsewhere in this Agreement, Seller shall indemnify, protect, defend, and hold harmless Buyer, its parent, subsidiaries, and affiliated entities, and its and their respective members, directors, officers, employees, and agents (the "Buyer Indemnitees"), from and against any and all claims, liabilities, losses, damages, injuries, demands, actions, causes of action, suits, proceedings, judgments, and expenses, including reasonable attorneys' fees, court costs, and other expenses including, without limitation, those costs incurred at the trial and appellate levels and in any bankruptcy, reorganization, insolvency, or other similar proceedings, and other expenses (collectively, "Indmenifiable Claims") arising from or connected with: (a) any breach by Seller

of any provision hereof or the inaccuracy of any warranty or representation made by Seller herein,(b) any act or omission to act by Seller directly or indirectly related to its performance of this Agreement constituting negligence or reckless or willful misconduct, and (c) any act or omission relating to steam produced by Seller prior to the passage of title to the Buyer.

15.2 Indemnification by Buyer. Buyer shall indemnify, protect, defend, and hold harmless Seller, its parent, subsidiaries, and affiliated corporations, and its and their respective members, directors, officers, employees, and agents (the "Seller Indemnitees"), from and against any and all Indemnifiable Claims arising from or connected with: (a) any breach by Buyer of any provision hereof or the inaccuracy of any warranty or representation made by Buyer herein (b) any act or omission to act by Buyer directly or indirectly related to its performance of this Agreement constituting negligence or reckless or willful misconduct, and (c) any act or omission relating to steam delivered by Seller after the passage of title to the Buyer, except such claims as may arise from any breach by Seller of the specifications set forth on Schedule 1.

15.3 Indemnifiable Claims. Each Party shall give the other party prompt notice of any Indemnifiable Claim brought against it coming within the purview of these indemnities. Within five (5) business days after receipt of such notice, the indemnitor shall undertake the defense of each such Indemnifiable Claim with counsel satisfactory to and approved by the indemnitee, which approval shall not be unreasonably withheld. If the indemnitor fails to undertake and sustain the defense of any Indemnifiable Claim in the manner required by this Section 15.3, the indemnitee may engage separate counsel, pay, settle, or otherwise finally resolve such Indemnifiable Claim for the account and at the risk and expense of the indemnitor. Any payment, settlement, or final resolution otherwise by the indemnitee shall release the indemnitor from liability for such Indemnifiable Claim. If the indemnitor undertakes the defense of an Indemnifiable Claim in the manner required by this Section 15.3, the indemnitee may, at its own expense, engage separate counsel and participate in the defense of such claim. In such event, the indemnitee agrees to reasonably cooperate and assist in the defense of such claim.

Article 16
UCC

Except as otherwise provided in this Agreement, the provisions of the Uniform Commercial Code ("UCC") of the State of New Hampshire shall be deemed to apply to this Agreement, and steam sold and purchased hereunder shall be deemed to be a "good" for purposes of the UCC. The Buyer may file UCC statements reflecting its ownership interest in the Back-Up Boilers; any liens or financing by the Seller or owner of land on which the Seller's plant is located shall expressly exclude any security or other interest in the Back-Up Boilers. At Buyer's request, the landowner (P & M Realty of Concord, LLC) and Seller shall grant Buyer a recordable interest in the property on which the Seller's plant is located which will ensure that Buyer has full rights to maintain, operate, repair, improve, obtain access to, and in general exercise all its rights provided hereunder in respect to, the Back-Up Boilers and Buyer's distribution system. Such rights shall have priority over any liens in connection with financing obtained by the landowner and/or Seller.

Article 17

NOTICES

All notices to any Party hereunder shall be in writing and shall be given to the Parties at the addresses set forth below:

If to Seller:	Peter Bloomfield Concord Power and Steam, LLC ~~P.O. Box 2520~~ 105½ Pleasant St. Concord, NH 03302
If to Buyer:	Peter Bloomfield Concord Steam Corporation P.O. Box 2520 105½ Pleasant St. Concord, NH 03302
With Copy to:	Sarah B. Knowlton, Esq. McLane Law Firm 100 Market Street, Suite 301 Portsmouth, NH 03801

Notice by hand delivery prior to 5:00 PM local time is deemed received the day on which it was hand-delivered. Notices by overnight mail or courier are deemed delivered upon receipt. Either Party may change its address by providing written notice of such change.

Article 18
PUC APPROVAL

Seller agrees that, to the extent requested by the Buyer, it shall make its officers and employees and its books and records available to the PUC for review and shall cooperate with the Buyer in responding to any inquiries or investigations by the PUC to which the Buyer is required to respond, whether relating to this Agreement, the costs incurred by Buyer under this Agreement or otherwise. The Buyer agrees to take all reasonable measures to protect any confidential information of the Seller during such processes.

Article 19
DISPUTE RESOLUTION

If a dispute arises under this Agreement, the Parties shall first promptly attempt in good faith to resolve the dispute by negotiation. If such negotiations are unsuccessful, any disputes or claims between the Parties arising out of or relating to this Agreement, or the breach hereof, not settled by negotiation, shall be settled by arbitration conducted in accordance with the commercial arbitration rules of the American Arbitration Association ("AAA") in effect at that time, at a location specified by AAA in the State of New Hampshire. A single arbitrator shall decide all disputes. The arbitrator shall not have been previously employed by either Party, shall

have significant knowledge and experience in the utility industry, and shall not have a direct or indirect interest in either Party or the subject matter of the arbitration. Such arbitrator shall be designated as mutually agreed by the Parties within thirty (30) business days after either Party requests in a writing sent to the other Party that a dispute or claim be arbitrated. If the Parties fail to select an arbitrator, the arbitrator shall be selected under the expedited rules of the AAA. Depositions may be taken and other discovery may be obtained during such arbitration proceedings to the same extent as authorized under the Federal Rules of Civil Procedure, except as otherwise agreed by the Parties. The arbitrator shall issue a scheduling order that shall not be modified except by the mutual agreement of the Parties. The arbitrator shall state in writing the factual and legal basis for the award. Any award rendered by the arbitrator shall be final, and judgment may be entered upon it in accordance with applicable law in any court having jurisdiction thereof. The arbitrator may award the prevailing Party its costs, including attorney's fees, incurred as a result of the dispute. Notwithstanding the foregoing procedures, either party may, at any time, seek injunctive relief in addition to the process described above. Performance under the Agreement shall continue during the dispute resolution process except in such instance where continuation would cause the Agreement to fail its essential purpose. The Parties agree that payment disputes shall not, in association with such dispute resolution procedures, be considered as a condition giving rise to failure of essential purpose. The Parties agree that time of the essence principles shall guide the hearing and that the arbitrator(s) shall have the right and authority to issue monetary sanctions in the event of unreasonable delay. Any conflict between the AAA Rules and the provisions of this Agreement shall be controlled by this Agreement.

Article 20
LIQUIDATED DAMAGES

The Seller and Buyer understand and agree that it would be extremely difficult if not impossible to quantify the value of the damage incurred by Buyer if Seller were to deliver steam that does not meet the specifications set forth on Schedule 1. Nevertheless, the Buyer and Seller have attempted to estimate the potential impact to the Buyer and its facilities if the Seller were to deliver steam that fails to meet such specifications, and have agreed upon the following as the amounts of liquidated damages to be paid by the Seller to the Buyer for any and all steam delivered that fails to meet such specifications:

20.1 If the steam temperature exceeds the upper limits for more than two hundred forty (240) minutes during any period of forty-eight (48) consecutive hours, $10,000 for every sixty (60) minutes or any part thereof in excess of the two hundred forty (240) minutes;

20.2 If the steam does not meet any other of the specifications of steam quality in Schedule 1, the Seller shall have seven (7) days after being given written notice of such default to cure the noncompliance. If after seven days the steam quality default has not been cured, the Buyer shall not be obligated to pay the O&M Charge for any steam delivered during the period of noncompliance and continuing until the steam quality issues are resolved and the steam meets all of the Schedule 1 levels.

All damages amounts shall be escalated as of the beginning of each Service Year based on the increase, if any, in the GDPIPD from the beginning of the prior Service Year

Article 21
CONFIDENTIALITY

The Buyer understands and agrees that, in order to comply with its obligations under this Agreement, from time to time the Seller may disclose to the Buyer certain information that constitutes confidential commercial information of the Seller, and as such is maintained in strict confidence by the Seller. The public disclosure of such information is likely to cause substantial harm to the Seller by disclosing to others sensitive competitive information concerning the Seller's costs or other matters. The Buyer therefore agrees not to disclose any such confidential commercial information, if it is designated by the Seller as such, to any other person or entity, except (1) its attorneys and consultants on a need to know basis only, (2) to any regulatory agency to which such disclosure is required, but then only after giving prior notice to the Seller and taking all reasonable steps to obtain confidential treatment of such information, and (3) in response to a subpoena or other mandatory legal process, but then only after giving prior notice to the Seller and taking all reasonable steps to obtain confidential treatment of such information.

Article 22
MISCELLANEOUS

22.1 Waiver. No term or condition of this Agreement shall be deemed to have been waived and no breach excused unless such waiver or breach is in writing, signed by the Party against whom it is sought to be enforced. Failure to demand or insist, in any one or more instances, upon strict performance of these terms, or to exercise any rights conferred under this Agreement, shall not be construed as a waiver or relinquishment of any right to assert or rely upon any such terms or rights in the future.

22.2 No Third Party Beneficiaries. Nothing in this Agreement shall provide any benefit to any third party or entitle any third party to any claim, cause of action, remedy or right of any kind, it being the intent of the Parties that this Agreement shall not be construed as a third party beneficiary contract.

22.3 Entire Agreement. This Agreement is the final, complete and entire Agreement between the Parties regarding the subject matter hereof, and all prior discussions, negotiations, communications, proposals or agreements, whether oral or written, are hereby superseded. This Agreement may not be modified, altered, or amended in any way except in writing signed by duly authorized representatives of both Buyer and Seller.

22.4 Interpretation. The Parties agree that each Party and its counsel have reviewed this Agreement and the normal rule of construction that any ambiguities are to be resolved against the drafting Party shall not be employed in the interpretation of this Agreement.

22.5 Governing Law. This Agreement shall be construed in accordance with and shall be enforceable under the laws of New Hampshire without regard to conflict of laws principles.

22.6 Counterparts. This Agreement may be executed in any number of counterparts, each of which shall be deemed an original, but all such counterparts together shall constitute but one and the same instrument.

22.7 Survival. Any sums due from either Party that by the terms hereof would be payable, or are incapable of calculation until, after the expiration or earlier termination of this Agreement shall survive and remain a continuing obligation until paid. Any obligations of either Party that by the terms hereof are to be performed after the expiration or earlier termination of this Agreement shall survive and remain a continuing obligation until performed. Additionally, the provisions of Section 4.2, Section 8.5, Article 15, Articles 18, 19 and 22 shall survive the expiration or earlier termination of this Agreement.

22.8 Severability. If any term or provision of this Agreement or the application thereof to any person or circumstance is, to any extent, invalid or unenforceable, the remainder of this Agreement, or the application of such term or provision to persons or circumstances other than those as to which it is invalid or unenforceable, shall not be affected thereby, and each term and provision of this Agreement shall be valid and be enforced to the fullest extent permitted by law.

IN WITNESS WHEREOF, the undersigned have caused this Steam Purchase Agreement to be duly executed, delivered and effective upon execution by both Parties

CONCORD POWER AND STEAM, LLC

By:_____
Name: Peter Bloomfield
Title: Manager

CONCORD STEAM CORPORATION

By:_____
Name: Peter Bloomfield
Title: President

Agreed and Accepted as to Article 16 Only:

_____
P & M Realty of Concord, LLC

SPA Attachment A
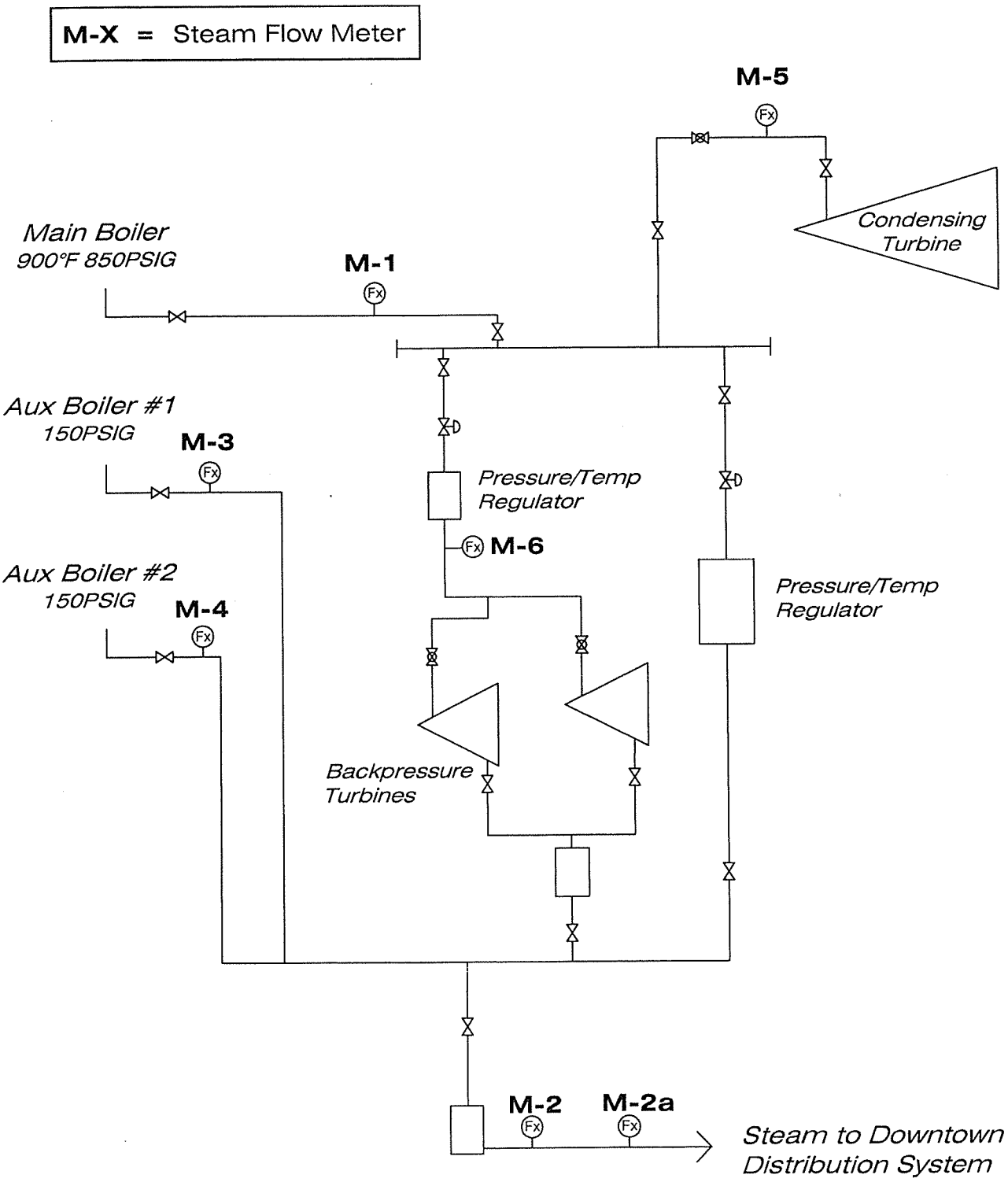
Steam Flow Meter Diagram