ATTACHMENT C

PSNH INTERCONNECTION REPORT FOR

CUSTOMER GENERATION

PINETREE TAMWORTH PROJECT

FINAL REPORT

SESD SITE NO. 324

P. C. Martin
January 27, 1988
June 15, 1995 **REV.**

INDEX

I. INTRODUCTION

II. DESCRIPTION OF MAJOR COMPONENTS

III. PSNH REQUIREMENTS - GENERAL

- A. SAFETY CONSIDERATIONS
- B. SERVICE QUALITY CONSIDERATIONS
- C. METERING CONSIDERATIONS

IV. PSNH REQUIREMENTS - SPECIFIC

- A. SYSTEM CONFIGURATION AND PROTECTION
- B. SYSTEM METERING
- C. PRIMARY INTERCONNECTION
- D. TELEMETRY
- E. SYSTEM OPERATION
- **F. SYSTEM EXPANSION**

V. PSNH PRICE ESTIMATES

- A. SYSTEM PROTECTION
- B. SYSTEM METERING
- C. PRIMARY INTERCONNECTION

VI. INTERCONNECTION EQUIPMENT OWNERSHIP, OPERATION, AND MAINTENANCE

- A. DELIVERY POINT
- B. DESCRIPTION OF RESPONSIBILITIES

VII. DRAWINGS

- A. PARTIAL ONE-LINE DIAGRAM (**SK-PCM-324-4**)

I. INTRODUCTION

[This report is a revision to one issued January 27, 1988. The revisions detail 1) changes made since 1988 and 2) requirements for operating scenarios which were not possible to review for the 1988 issue.

The format for displaying the changes is to make "BOLD" any changes or additions to the original report. No effort has been made to change the original text except for occasional inaccuracies. Equipment removals and additions since original plant commissioning as well as future requirements are shown in "BOLD" as additions to the original.]

A study has been performed to determine the impact of this proposed facility on the PSNH system. All technical analysis was based on the equipment listed under Section II, and the facility arrangement illustrated on partial one-line diagram **SK-PCM-324-4**. Where actual site-specific data was not readily available, estimated or "typical" values were utilized in any required calculations. Any deviation from the list equipment of the illustrated configuration may have significant safety and/or technical ramifications. Consequently, if changes are anticipated now or in the future, PSNH should be informed immediately so that the requirements and recommendations contained within the report may be revised where necessary. This procedure will ensure that the Developer is informed of PSNH requirements in a timely fashion and should eliminate the delays and expense which could otherwise be experienced by the Developer.

II. DESCRIPTION OF MAJOR COMPONENTS

A. Description Of Facilities

This project involves the **operation** of up to 20,000 KW **with provisions to generate up to 25,000 KW** net generation on the B-112 line between Beebe River and White Lake. The energy source will be wood fired steam. Station service for the plant will be taken from the 13.8 kV generator bus.

Sketch **SK-PCM-324-4** (attached) shows the proposed addition in one-line fashion.

B. Mechanical Components

1. Turbine - Westinghouse, 3600 RPM, 20,000 KW.
2. Governor - Modified Woodward 505, electronic.

C. Electrical Components

1. Generator - Synchronous, 3600 RPM, 28,750 KVA at .8pf and 15 PSI H_2.
2. Exciter/Regulator - Westinghouse PRX300 Static System.
3. Generator Stepup Transformer - 20,000 KVA, 13.8 kV Delta - 19.9/34.5 kV Wye Grounded through a reactor.
4. GSU Neutral Reactor - 9.0 Ohms at 60 Hz.
5. 34.5 kV Line - Approximately 1.75 mi on private R.O.W.
6. Transformer to 115 kV - 25, 000 KVA, 34.5 kV - Delta - 66.4/115 kV Wye Grounded through a reactor.

7. Initial Grounding Reactor for item #6, 2-69 kV Transformers with shorted secondaries resulting in a neutral reactance of 104 Ohms when paralleled. **The final reactor, to be installed in 1995, is 61 Ohms as detailed in Section IV.A.4.**
8. 115 kV Circuit Breaker - General Electric FK-115-5000, 5000 MVA I.C., 1200A continuous.
9. 115 kV Airbreak - Joslyn RF-2, 115 kV.

III. PSNH REQUIREMENTS - GENERAL

A. Safety Considerations

1. The connection of the facility to the PSNH system must not compromise the safety of PSNH's customers, personnel, or the owner's personnel.

2. The generating facility must not have the capability of energizing a de-energized PSNH circuit.

3. An emergency shutdown switch with facility status indicator lights, and a disconnecting device with a visible open shall be made available for unrestricted access and use by PSNH personnel in the Developer's 115 kV yard. The operation of the switch shall cause all of the facility's generation to be **disconnected from the PSNH system** and shall block all automatic **reconnection to the PSNH system** until the switch is reset. The status lights, mounted with the shutdown switch, shall be located outdoors at a position acceptable to PSNH operating division personnel. A red light shall indicate that the facility has generation connected to the PSNH system. A green light shall indicate that all generation is disconnected from the PSNH system. The lights shall be driven directly from auxiliary switches located on the facility's **115 kV** circuit breaker **F190**. The disconnecting device with visible open shall be located between the PSNH system and the facility's generation.

   Modifications to the present shutdown switch implementation are required in 1995. The present box must be replaced with a box with a hinged, lockable door rather than a bolted cover. In addition, a contact from the emergency shutdown switch must be in the close circuit of OCB F190 to prevent all closing of F190 while the switch is in the operate, or "trip" position. The switch must be capable of staying operated until manually reset by PSNH personnel.

4. The settings for all protective relays required by PSNH will be developed by PSNH at the Developer's expense.

5. A crew of PSNH approved relay technicians must apply settings to and verify the proper functioning of those protective systems required by PSNH. This work will be performed at the Developer's expense.

6. The generating facility has full responsibility for ensuring that the protective system and the associated devices are maintained in reliable operating condition. PSNH reserves the right to inspect and test all protective equipment at the 115 kV interconnecting point or at the generator site whenever it is considered necessary. This inspection may include tripping of the breakers and testing the transfer trip system from Beebe River S/S and/or White Lake S/S to the site.

7. The short circuit interrupting device(s) must have sufficient interrupting capacity for all faults that might exist. The PSNH system impedance at the facility will be supplied on request.

8. All shunt-tripped short circuit interrupting devices applied to generators must be equipped with reliable power sources. A D.C. battery with associated charging facilities is considered a reliable source.

9. All synchronous generator facilities must be equipped with battery-tripped circuit breakers.

10. Any protection scheme utilizing AC control power must be designed in a fail-safe mode. That is, all protective components must utilize contacts which are closed during normal operating conditions, but which open during abnormal conditions or when control power is lost to de-energize the generator contactor coil. These schemes may be utilized only with non-latching contactors and may not be used with synchronous generators.

11. A complete set of AC and DC elementary diagrams showing the implementation of all systems required by PSNH must be supplied for PSNH review. These drawings should be supplied as soon as possible so that any non-conforming items may be corrected by the Developer without impacting the scheduled completion date of the facility.

12. All voltage transformers driving PSNH-required protection systems must be rated by the manufacturer as to accuracy class, and must be capable of driving their connected burdens with an error not exceeding 1.2 percent.

13. All current transformers driving PSNH-required protection systems must be rated by the manufacturer as to accuracy class and must be capable of driving their connected burdens with an error not exceeding 10 percent at maximum fault requirements.

14. All PSNH-required protective relays, and any other relays which PSNH might be requested to test, must be equipped with test facilities which allow secondary quantity injection and output contact isolation.

15. It is not the policy of PSNH to maintain a stock of protective relays for resale to facility Developers. Since many protective devices have delivery times of several months, Developers are strongly advised to order them as soon as possible after PSNH type-approval is received.

16. Protection of the generating facility equipment for problems and/or disturbances which might occur internal or external to the facility is the responsibility of the Developer.

17. No operation of the facility's generation is allowed until all requirements in Sections III and IV of this report have been met, and all systems required therein, are in place, calibrated, and, if applicable, proven functional. This requirement may be waived by PSNH for a given system if generation is required to demonstrate the proper functioning of that system.

B. Service Quality Considerations

1. The connection of the facility to the PSNH system must not reduce the quality of service currently existing on the PSNH system. Voltage fluctuations, flicker, and excessive voltage and current harmonic content are among the service quality considerations. Harmonic limitations should conform to the latest IEEE guidelines and/or ANSI standards.

2. In general, induction generators must be accelerated to "synchronous" speed prior to connection to the PSNH system to reduce the magnitude and duration of accelerating current and resulting voltage drop to PSNH customers to acceptable levels.

3. In general, synchronous generators may not use the "pull-in" method of synchronizing due to excessive voltage drops to PSNH customers.

4. Power factor correction capacitors may be required for some facilities either at the time of initial installation, or, at some later date. The installation will normally be done by the Developer at his expense.

5. Certain facilities having installed capacity similar in magnitude to connected circuit load may require that control modifications be made to tap changers in the electrical vicinity. Should they be necessary, the modifications will be made at the Developer's expense.

6. Automatic reclosing of the PSNH circuit after a tripping operation will occur after an appropriate time delay. If voltage blocking of automatic reclosing is required, it will be added at the Developer's expense.

   It has been determined that no further reclosing modifications at remote sites are required.

C. Metering Considerations

1. Except for protection/control and metering voltage sensing and generator and/or capacitor contactor supply voltage, no unmetered station service AC shall be taken from the station service transformers.

2. The following is a list of information which must be available to the PSNH Power Supply Department for this generator.

- Provide analog telemetry and control to the PSNH ESCC computer for monitoring of:

Telemetry at the Generator 13.8 kV Bus

1. KW net of station service.
2. KX net of station service.
3. Net KWH pulses (billing value repeated from JEM-2).

Telemetry and Control at the 34.5-115 kV Stepup Location

1. 115 kV volts.
2. 115 kV Breaker Trip and Status.
3. Loss of Guard for Transfer Trip - Status.
4. Relay or Control DC Power.
5. Battery Undervoltage - Status.
6. 86 Lockout - Status.
7. Transfer Trip (On/Off Status) - (Tones).
8. Transfer Trip (On/Off Status) - (CXR).
9. Generator breaker (52G) status.

In 1993 the White Lake-Tamworth power line carrier equipment was removed, and new line relaying was added. The telemetry at the 34.5 - 115 kV stepup location has been revised as follows:

1. **115 kV Volts.**
2. **Relay AC.**
3. **Generator Breaker Status.**
4. **B112 Transfer Trip.**
5. **Lockout Relay Operation.**
6. **Loss of Guard - Transfer Trip.**
7. **Control DC Status.**
8. **Battery Undervoltage.**

Two other items will be required to be telemetered to the PSNH ESCC computer by 3/30/96.

1. **13.8 kV generator bus voltage.**
2. **Local/Remote switch status.**

In conjunction with the monitoring of the local/remote switch, a small change in configuration is required. Both the PSNH and Tamworth Plant supervisory control units at the 34.5-115 kV stepup location will be controlled by the local/remote switch. When in "LOCAL" position, no supervisory control actions will be available. When in "REMOTE", control will be possible from either the Generating Plant or the PSNH ESCC.

NOTE: The plant operator will have supervisory control of the 115 kV breaker from the generating plant. Closing of the 115 kV breaker will be monitored by voltage relaying looking at the Developer's 34.5 kV line, allowing only dead 34.5 kV line closing of the 115 kV breaker.

- The Station Operator is to report expected output for the following day, outage and return times, and significant limitations to the PSNH dispatcher.

- The dates planned for annual inspection along with any flexibility in the planned period should be available to PSNH in accordance with NEPEX Operating Procedure #5.

- Using monthly meter readings, submit a calculated bill for generation supplied to PSNH.

- Report all generator trips caused by relay action, as well as the associated relay targets, to the PSNH dispatcher.

IV. PSNH REQUIREMENTS - SPECIFIC

A. System Configuration and Protection

1. The facility must be arranged and equipped as per partial one-line diagram **SK-PCM-324-4.**

2. The following protective functions must be supplied and connected to automatically trip 52G, 52L1, 3324 or F-190 as indicated. These devices must be utility grade as approved by PSNH.

At the Plant

32	- Reverse Power (52G)
81O	- Overfrequency (52G)
81U	- Underfrequency (52G)
59	- Overvoltage (52G)
27/47	- Three Phase Undervoltage/Phase Sequence (52G)
51G	- GSU Neutral Overcurrent (52L1)
87T	- 34.5 - 13.8 kV Transformer Differential (52U, 52G)

At the 115 kV Hi-Yard

87T	- Transformer Differential (3324, F-190)
63	- Transformer Sudden Pressure (3324, F-190)
21-1	- Zone 1 at 115 kV (F-190)
21-2	- Zone 2 at 115 kV (F-190)
51N	- Ground Relaying at 115 kV (F-190)
50/51	- F-190 Phase Overcurrent (F-190)
59N	- Open Corner Delta Relaying, 34.5 kV (3324)
Transfer Trip	- Tones from Beebe (F-190)
Transfer Trip	- Carrier from White Lake Differential (F-190)

PSNH will review these relays since the Developer has already placed some orders with manufacturers.

In 1993 the transfer trip from White Lake was removed and the following required relaying was added.

50	**- Fault Detector for Existing 21-1, 21-2**
27P-F190	**- Monitoring AC to Existing System**
50/LS-F190	**- Fault Detector for System 2**
21Z1/LS-F190	**- Zone 1 System 2**
21Z2/LS-F190	**- Zone 2 System 2**
62Z/LS-F190	**- Zone 2 Timer, System 2**
50/51N/LS-F190	**- Ground Fault Relaying System 2**
27S-F190	**- Monitoring AC to System 2**

In addition, a breaker failure scheme for OCB F190 is required to be installed in 1995 as specified in a February 12, 1988 letter to Mr. Timothy Shea.

3. The facility 34.5 - 115 kV stepup transformer must have a Delta-Gr. Wye with reactor configuration.

4. Although the final neutral reactor specifications will be determined only on the basis of actual transformer impedance and size in conjunction with actual generator data and ultimate system configuration, the following can be used for the initial 115 kV operating period. A more specific rating will be determined after a complete system review.

   104.0 OHMS at 60 Hz
   2 - 1667 kVA, 69 kV transformers in parallel. The secondary terminals of each transformer will be permanently shorted.

   The final reactor should not be ordered until detailed specifications are received from PSNH. The final reactor must comply with IEEE Standard 32-1972.

   The following is the final neutral reactor specification.

Current (Thermal):	**700A for 10.0 Seconds**
Current (Continuous):	**21A**
Frequency:	**60 Hz**
Reactance:	**61.0 Ohms**
System Voltage:	**115 kV**
Minimum Insulation Class:	**46.0 kV**
Minimum BIL:	**350 kV**
Outdoor Service	

   This reactor must be installed in 1995.

5. Overgeneration alarm and tripping of 52G after three minutes of net generation to PSNH exceeding 20.0 MW.

This requirement has been deferred and indefinitely replaced by manually implemented output control.

6. The 115 kV relaying at Beebe River is presently a single system with a non-directional ground relay. Because of the addition of Tamworth, a second system and directional ground relaying is required and will be added at the Developer's expense.

7. Transformer differential relays at White Lake presently transfer trip Beebe B112 by powerline carrier. The same condition will also require tripping of OCB F-190. This will also be done by carrier. Due to the age of the existing carrier equipment, the White Lake transmitter and Beebe receiver will all be changed to a modern design compatible with proposed Tamworth equipment.

   This equipment was installed but then deactivated in 1993 with the redesign of the PSNH White Lake S/S.

B. System Metering (at the generating plant)

Item 1) 2 - Westinghouse type KIR-11 indoor current transformers, 15 kV class, ratio 1200/5 amps.

Item 2) 2 - Westinghouse type VOY-11 voltage transformers, ratio 14400/120 volts.

Item 3) 1 - Scientific Columbus type JEM-2 solid state watthour meter, with transformer loss compensation option and KQH function.

NOTES:

1. Items 1 and 2 above were previously purchased and installed by the Developer. The voltage transformers will be used in conjunction with both the generation and station service meters.

2. Item 3 above will be specified separately and ordered by the Developer. In the interim, Public Service of New Hampshire will loan the Developer a basic watthour demand meter.

3. The isolation relay (ISO) and the (DSR) recorder shown on the diagram, in conjunction with the generation meter, will be supplied and installed by Public Service of New Hampshire.

4. Station service meters and (DSR) recorder will be supplied and installed by Public Service of New Hampshire.

5. Station service breaker 52S2 must be interlocked with generator breaker 52G so that 52S2 cannot be closed if 52G is open. If 52G trips, 52S2 will trip after a suitable short time delay.

6. Momentary shunting of the Public Service of New Hampshire station service metering will be allowed while ramping up the generation. A suitable time relay device must then trip 52S1.

7. A reverse power relay is required to trip 52S2 upon reverse power flow as generation is being brought down. Therefore, 52S1 would have to be closed prior to ramping generation down.

C. Primary Interconnection

PSNH will install the following equipment to facilitate the primary connection to its system:

1. A 115 kV tap structure to gain access to PSNH 115 kV line B112.

   (The final study may require significant changes at 115 kV, such as in-line breakers or switches on the PSNH B112 line.)

   In 1993 an in-line 115 kV switch designated 112J2 was installed on the Beebe River side of the F190 tap.

2. A 34.5 kV tap of line 346 for construction power and future backup station service.

The Developer is responsible for the following:

1. All construction from the plant to the 115 kV tap structure.

   (To facilitate test generation at 34.5 kV during 1987, substantial labor was required for engineering and operation. Although these will not be detailed in this report, they will be charged to the Developer.)

D. Telemetry and Control

Telemetry and control as listed in Section III.C.2 will be required to the PSNH ESCC computer in Manchester, NH. The channel from the site to the ESCC will be a telephone circuit which PSNH will assist in specifying, but which the Developer must order and pay for.

E. System Operation

1. One 115 kV relaying system will consist of Zone 1, Zone 2 with a Zone two timer, and a neutral overcurrent relay operating for B112 line faults.

2. Transfer trip from Beebe River via RFL tones on a telephone channel will operate breaker F-190 for any operation of Beebe B112. This will constitute a second 115 kV system.

With the construction of the Y138 line from White Lake to Saco Valley S/S, there will be times when Tamworth will be tied to Saco Valley and Maine. The second system of relaying and switch 112J2, both added in 1993, accommodate this contingency.

3. Transformer differential relays at White Lake presently transfer trip Beebe B112 by powerline carrier. The same condition will also require tripping of OCB F-190. This will also be done by carrier. The lack of this item will not preclude operation during the initial 115 kV operation. Sequential tripping via existing carrier on B112 and Item E.1. above will be temporarily acceptable. **Transfer tripping by powerline carrier from White Lake S/S is not a current requirement nor is it envisioned in the foreseeable future. See Section IV.F. "System Expansion" below.**

4. A review of the voltage sensing/switching scheme on Beebe B112 will be a part of the final system review study.

   There will be no requirements in this area.

5. The proposed Tamworth 115 kV interconnection is acceptable for the normal operation of the system. The normal operation of the system considers that the A111, E115, X178 and B112 115 kV lines and their associated primary and secondary protection systems are all in-service and that the White Lake jet is not operating. Normal operation also implies that the PSNH and Central Maine Power Company are electrically separated at switch 333J4 and OCB 347 at White Lake S/S. Any variation in this configuration is considered an abnormal system condition, during which Tamworth will not be allowed to operate. The abnormal operational concerns and future operational concerns will be addressed in the permanent 115 kV interconnection study.

   Since 1990 Tamworth has been operating according to a voltage schedule provided by PSNH. This is and will remain the primary tool for responding to nominal and off nominal system conditions. At this time, other than electrical problems between 112J2 and White Lake S/S, no single contingency has been identified on the existing PSNH system which will generally preclude operation of Tamworth tied to the system. Tamworth's output may be constrained, however, based on system conditions and Tamworth's ability to maintain its voltage schedule. The schedule may change over time.

   Brief disconnections will occasionally be necessary. For example, during switching of B112, Y138 and K1214, there are system conditions which will require Tamworth to be temporarily disconnected. These conditions are expected to be infrequent, and will be discussed with plant personnel beforehand.

6. Generator breaker 52G must not be closed when the plant is tied to the PSNH 346 line for back-up station service.

F. System Expansion

A document entitled "Tamworth F190 Summary of Proposed Protection Changes 1992-2000+" was developed in 1992 and subsequently discussed with Tamworth personnel. Although the dates are inexact, the proposed changes to F190 protection are still valid planning level assumptions. These changes are summarized as follows:

1995: Change out one F190 Zone 1 relay to be compatible with the new 115 kV breaker addition at Saco Valley S/S.

1997-2000: For the addition of 115 kV breakers at Saco Valley on the Y138 and K1214 lines, no equipment changes are anticipated on F190 subject to final setting reviews. Setting changes are likely.

Beyond 2000: White Lake S/S B112 and Y138 115 kV breakers and a possible new line to White Lake are envisioned. This would require the removal from service of F190 Z1 relaying. Transfer trip from White Lake to Tamworth was envisioned but this need has not been confirmed at this time.

In summary, future expansion of the system will require modifications to F190 at the Owner's expense which are consistent with the plant's operation as an available, reliable system element. The items listed here, along with possible changes in the previously discussed voltage schedule, provide a planning level guide to expected modifications.

V. PSNH PRICE ESTIMATES

The following estimates for labor, materials, and overheads are supplied as an aid to the Developer for financial planning purposes. Should the Developer elect to have PSNH perform any of the work described in the estimates, he will ultimately be billed for the full actual cost of any work performed, including overheads and tax effects.

Authorization for PSNH to perform any of the work or supply any of the equipment described below must be forwarded to the Supplemental Energy Sources Department along with a minimum payment covering 50% of the estimated labor and 100% of materials cost. PSNH will neither perform work nor order materials until this requirement has been met. The calculations of prepayment requirements will be net of items already prepaid.

These costs do not include the final system study.

The cost of the final system study is $5,800.00 which will be billed upon issuance of this report as previously agreed upon.

No implementation costs required by this report are included. Individual department estimates will be provided for any material or services requested of PSNH.

A. System Protection

1. All protective relay materials from the plant to the 115 kV tap structure will be purchased by the Developer. PSNH must be notified as to exact relay model numbers proposed before ordering so that proper setting capability exists for interfacing with the PSNH system.

SUBTOTAL $ 0.00

2. The Developer will hire a PSNH approved test crew to set and perform trip tests on PSNH required relays.

SUBTOTAL $ 0.00

3. Engineering - Control circuits review, specification review, meetings, PSNH required relay settings.

SUBTOTAL $ 11,400.00

4. Transfer trip tone transmitter and transfer trip carrier receiver installation and testing at Beebe River, testing only at Tamworth.

Carrier receiver with test panel	$ 5,730.00
Pre-Wired Tone Shelf (by Dev.)	0.00
Installation and Checkout, both systems	18,110.00

SUBTOTAL $ 23,840.00

5. Add a second system of 115 kV relaying at Beebe River and make the existing non-directional ground relay directional.

Material	$ 16,775.00
Labor	33,920.00

SUBTOTAL $ 50,695.00

6. Supervisory changes and programming as well as SCADA testing to tie the Developer's Chapparal to the PSNH computer.

Material	$ 6,500.00
Labor	4,385.00

SUBTOTAL $ 10,885.00

7. Carrier transfer trip replacement and instantaneous ground overvoltage relay additions at White Lake S/S, with testing only at Tamworth.

Material	$ 9,000.00	
Labor	18,010.00	
SUBTOTAL		$ 27,010.00

(NOTE: A CCVT, line trap and carrier receiver will be required at the Developer's 115 kV yard. PSNH will assist in specifying this equipment).

SECTION A TOTAL $ 123,830.00

B. System Metering

1. The Developer will purchase all required metering.

SUBTOTAL $ 0.00

2. Estimated labor to test the JEM-2, wire the instrument transformer secondaries, perform a connection verification analysis and supervise the overall metering installation.

SUBTOTAL $ 600.00

SECTION B TOTAL $ 600.00

C. Primary Interconnection

1. Material and labor to build the required structures on the PSNH right-of-way and tap the B112 line near the Developer's 115 kV yard.

SUBTOTAL $ 20,000.00

2. Material and labor required to tap the 346 line, provide construction power and miscellaneous switching for short term operation at 34.5 kV in 1987.

SUBTOTAL $ 8,000.00

SECTION C TOTAL $ 28,000.00

D. Contingent Tax Liability

1. Payment for tax on contribution in aid of construction, subject to final decision on N.H. PUC Docket DF 87-113. (26% of items A4, 5, 6, 7 and C1).

SECTION D TOTAL	$ 34,430.00
GRAND TOTAL (A + B + C + D)	$ 186,860.00

VI. INTERCONNECTION EQUIPMENT OWNERSHIP, OPERATION AND MAINTENANCE

A. Delivery Point

For the purpose of establishing ownership, operation and maintenance responsibilities, the location of facility energy delivery to PSNH (the "Delivery Point") must be defined. At this facility, the delivery point will be the point where the 115 kV line from the Developer attaches to the three pole structure at the edge of the PSNH right-of-way (Structure #2 of line F-190).

B. Description of Responsibilities

PSNH will own and maintain all equipment up to the delivery point. The Developer will own and maintain all equipment from the delivery point into and throughout the plant. Maintenance of the 115 kV equipment must only be under the authorization of the PSNH dispatcher.

VII. DRAWINGS

A. Sketch **SK-PCM-324-4** is attached.

BY PCM DATE 6/8/95 SUBJECT TAMWORTH SHEET NO. 1 OF 1
CHKD. BY ____ DATE ____ SESD #324 JOB NO. ____
SK-PCM-324-4

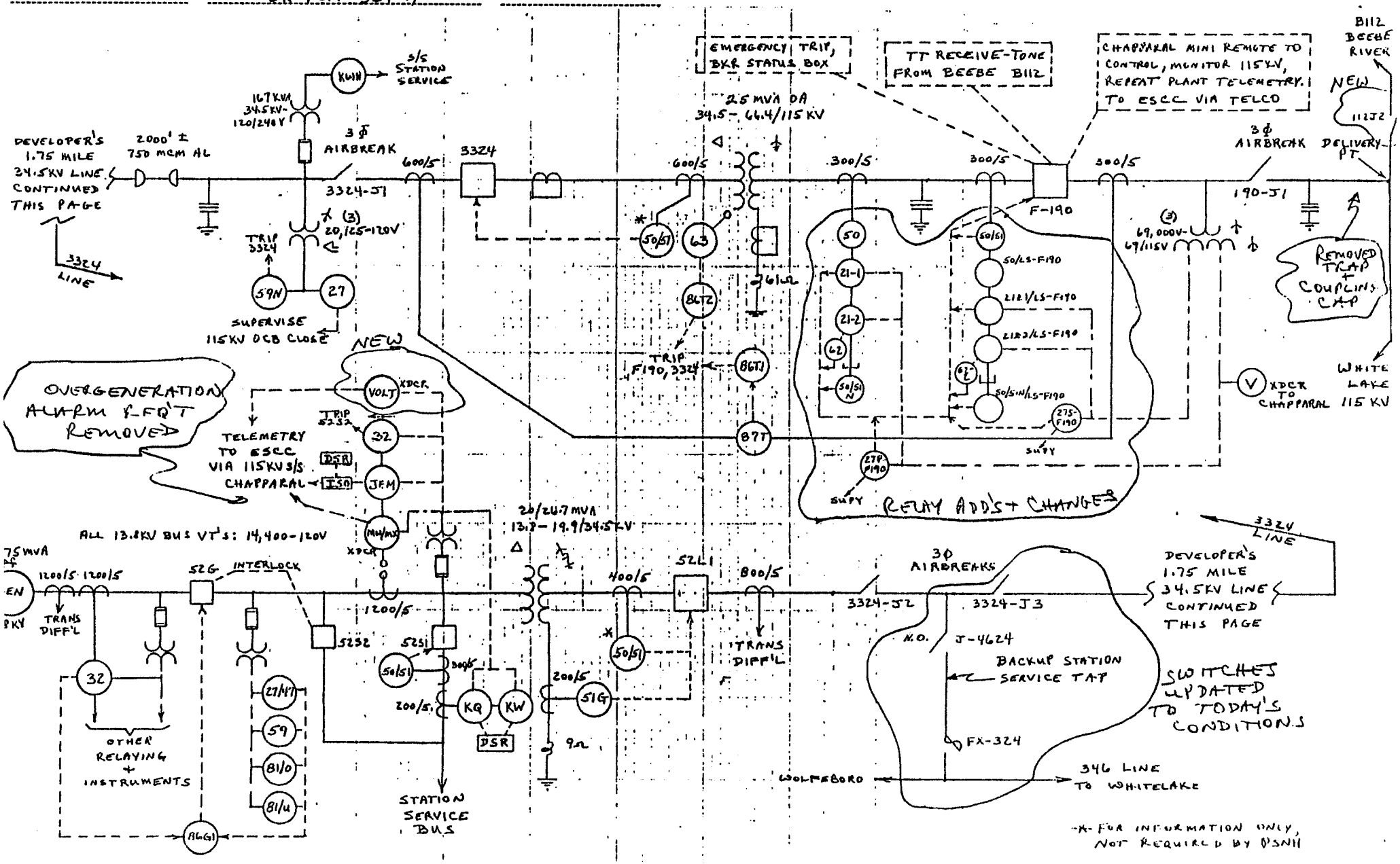

-X- FOR INFORMATION ONLY, NOT REQUIRED BY DSNH

TAMWORTH

GENERATOR VOLTAGE SCHEDULE

Voltage Schedule

Tamworth generator should adjust its reactive output (Mvar) in order to hold the voltage at the F190 breaker near 117.6 kV. This will be done while observing the F190 megawatt power flow and the generator 13.8 kV voltage limits described below.

Determination of Operating Limits

There are essentially three sets of F190 megawatt maximum limits and corresponding minimum generator 13.8 kV voltage limits that can be applied to Tamworth. The following two tables and the short explanations can be used to determine the correct operating limits.

Step 1: Select Tamworth's maximum net megawatt operating level (F190 MW), based on the configuration of the power system, from Table 1 below.

Step 2: Select the minimum generator bus voltage (13.8 kV) shown in Table 2 below, from either columns I, II, or III, based on the system configuration.

Step 3: If Tamworth cannot maintain the F190 breaker voltage while operating within the assigned limits determined in Step 1 and 2, the plant operator will call the dispatcher, inform him of that fact, and tell the dispatcher what his bus voltage is.

Step 4: The dispatcher may try to adjust the White Lake and Beebe River substation capacitors to restore Tamworth's reactive operating capabilities.

Step 5: If system conditions prevent changing the status of PSNH capacitors, the dispatcher can then use Table 2 to give the Tamworth plant operator a new maximum net megawatt output. The dispatcher will match the actual Tamworth generator 13.8 kV bus voltage to the minimum voltage column corresponding to the existing system configuration.

Table 1 - Tamworth Net MW Generation Limits

Transmission Element Out Of Service	Maximum Net MW Operating Level	Minimum Bus Voltage Reference Table 2 Column I, II, or III
Base Case Conditions Y138 Line Open	25	I
B112 (F190 to W.Lake)	0	N/A
B112 (Breaker to 112J2 Open & Y138 Closed)	22	II
Littleton Transformer	22	II
U-199 or X-178	22	II
A-111 or E-115	17	III

Table 2 - Tamworth Minimum 13.8 kV Bus Voltage

Maximum Net Megawatts	Column I: Base Case Y138 Open	Column II: Littleton Xfmr, U-199, X-178 (at Beebe), or B112 to 112J2 OOS	Column III: A-111 or E-115 OOS
25	14.5	--	--
24	14.3	--	--
23	14.1	--	--
22	14.0	14.5	--
21	13.8	14.4	--
20	13.6	14.2	--
19	13.5	14.1	
18	13.3	13.9	--
17	13.2	13.7	14.5
16	13.1	13.6	14.4
15	13.1	13.4	14.1
14	13.1	13.2	13.9
13	13.1	13.1	13.7
12	13.1	13.1	13.6
11	13.1	13.1	13.4
10	13.1	13.1	13.2
9 or Below	13.1	13.1	13.1

Additional Limitations:

- Maximum generator voltage in all cases is 14.5 kV.
- Due to equipment ratings, maximum output at 13.8 kV can be no more than 1200 amps.
- Voltage on the B-112 line can not exceed 121 kV.

All limitations described above are based on a ratio of 13.8/34.5 kV on the generator step-up transformer and 34.5/115 kV on the transformer at the interconnection point.
Any Changes on the system (i.e. any Tamworth facilities, additional transformer at White Lake, 34.5 kV protection changes, 115 kV line additions or configuration changes, etc.) may require these operating limitations to be updated.