STATE OF NEW HAMPSHIRE
PUBLIC UTILITIES COMMISSION

FREEDOM RING COMMUNICATIONS, LLC d/b/a BAYRING COMMUNICATIONS Complaint Against Verizon New Hampshire Re: Access Charges	) Docket DT 06-067

TESTIMONY OF

PETER SHEPHERD

On Behalf of

VERIZON NEW ENGLAND INC.
d/b/a VERIZON NEW HAMPSHIRE

March 9, 2007

REDACTED

ORIGINAL
N.H.P.U.C. Case No. DT 06-067
Exhibit No. 15
Witness PETER SHEPHERD
DO NOT REMOVE FROM FILE

TABLE OF CONTENTS

I. INTRODUCTION 1

II. VERIZON NH PROVIDES SWITCHED ACCESS SERVICE FOR TOLL CALLS MADE OR RECEIVED BY END-USERS WHETHER OR NOT VERIZON NH PROVIDES THE END-USER LOOP 4

III. VERIZON NH'S TARIFF REQUIRES PAYMENT OF ACCESS RATE ELEMENTS, INCLUDING THE CCL CHARGE, ON ALL INTRASTATE SWITCHED ACCESS PROVIDED TO CARRIERS 17

IV. CONCLUSION 30

V. EXHIBITS I - IV

I. INTRODUCTION

Q. PLEASE STATE YOUR NAME AND CURRENT POSITION.

A. My name is Peter Shepherd. I am a Senior Staff Consultant with Volt Information Sciences, Inc., currently assigned to a consulting engagement with Verizon New Hampshire ("Verizon NH") on Public Policy and Regulatory matters.

Q. PLEASE OUTLINE YOUR EDUCATIONAL AND PROFESSIONAL BACKGROUND.

A. I received a Bachelor of Science in Business Administration and Master of Business Administration from Babson College and have also completed courses in the Engineering programs of the University of New Mexico and Northeastern University. I have worked in the telecommunications industry for more than thirty years in a number of capacities.

I started my career in 1970 with New England Telephone and Telegraph Company ("NET") as a Central Office Technician, responsible for central office switching and interoffice trunking. Beginning in 1977, I was assigned to NET's Revenue Matters Department with increasing responsibilities for Independent Telephone Company Relations. In that organization, I had extensive involvement in coordinating joint network planning, the provision of jointly-provided services and network infrastructure modernization projects. In 1983, I became a Manager for Access Services with broad responsibilities for developing and managing access

1 services, including pricing, cost analysis, implementation, regulatory policy
2 development and product management. From 1989 through 1993, I had various
3 assignments in Marketing and Regulatory matters, leading to an assignment in 1993
4 with Verizon as a Director in the Public Policy and External Affairs Department. In
5 that role I had responsibility for state regulatory planning and support for regulated
6 retail and wholesale services provided by Verizon in the New England states. I have
7 testified and participated in numerous state commission proceedings throughout the
8 New England states and in New York on various subjects including access charges,
9 rate design, payphone service, collocation, special contracts, new product
10 introduction and regulatory reform. I retired from Verizon in November of 2003.

11 **Q. WERE YOU INVOLVED IN THE DEVELOPMENT AND SUPPORT OF**
12 **ACCESS CHARGES FOR THE STATE OF NEW HAMPSHIRE?**

13 A. Yes. I was a member of a team of managers that was responsible for
14 developing NET's intrastate access charges for New Hampshire at the time the
15 intraLATA toll market was opened to competition by this Commission during the
16 1991-1993 time period. Specifically, I was responsible for the interim switched
17 access services tariff that was developed for the initial opening of the New
18 Hampshire intraLATA toll market, when the Commission granted AT&T, MCI, U.S.
19 Sprint and Long Distance North interim authority to provide toll service in 1991. I
20 worked on the development and formulation of NET's proposal for the toll
21 competition trial in the Commission's Generic Competition Investigation, Docket
22 DE 90-002, and, in particular, NET's access charge proposal. I testified in that

1 docket on NET's access charge structure, rates and proposed tariff and was NET's
2 representative in negotiations between the parties that resulted in a stipulation that
3 the Commission approved, establishing the framework for access charges in New
4 Hampshire.

5 **Q. PLEASE SUMMARIZE YOUR TESTIMONY.**

6 A. The Commission should deny BayRing's complaint. The service Verizon
7 NH provides to BayRing and other carriers when it carries their toll traffic is
8 switched access, not switched interconnection tandem transit service, as BayRing
9 alleges. The tandem transit service provisions of the tariff apply only to the delivery
10 of **local** traffic, carried by Verizon NH, that originates from one carrier's network
11 and terminates with another carrier's network. The testimony explains why the
12 service at issue here is clearly switched access: namely, a service that involves a
13 carrier's use of Verizon NH's network for the transmission and switching of a
14 carrier's **toll** traffic to another carrier's or Verizon NH's end-user.

15 Moreover, BayRing contends that even if the Commission determines that the
16 service is switched access service, the rates charged to carriers should not include
17 carrier common line (or "CCL") charges because a call that originates with one
18 carrier and terminates with another carrier does not use a Verizon NH common line.
19 I explain that Verizon NH is properly applying its intrastate access tariff to toll
20 traffic. Specifically, I explain why the application of the CCL is expressly provided
21 for in the access tariff and arises from the access charge structure established by the
22 Commission in the DE 90-002 Generic Competition Investigation. As I testified

therein, the carrier common line rate element was deliberately established as a contribution rate element applicable to all switched access usage and **not** as an element designed to recover costs related to a carrier's use of end-user access lines or loop-related costs. The language of the approved tariff, in fact, specifies that all switched access is subject to carrier common line charges for that very reason, i.e., to provide contribution that otherwise would have been provided from toll services. In short, the tariff is clear as to the application of the carrier common line element, and there was an express public policy underlying its adoption. Nothing has occurred to alter the Commission's prior access charge determinations, and the tariff is being applied consistent with those prior determinations.

II. VERIZON NH PROVIDES SWITCHED ACCESS SERVICE FOR TOLL CALLS MADE OR RECEIVED BY END-USERS WHETHER OR NOT VERIZON NH PROVIDES THE END-USER LOOP

Q. WHAT IS VERIZON NH'S UNDERSTANDING OF THE ISSUE UNDER INVESTIGATION?

A. BayRing's April 28, 2006 petition to the Commission raises two issues. First, BayRing claims (at page 4) that certain calls made by its end-user customers, that traverse Verizon NH's network for delivery to a wireless carrier's end-user customers on a wireless carrier's network, are not switched access service subject to the provisions of Verizon NH Tariff NHPUC No. 85. This is so, BayRing contends, even though Verizon NH provides the switching and transport to provide access to the wireless carrier's network. Rather, BayRing argues that the switching and transmission services Verizon NH provides constitute tandem transit service subject

to the provisions of Verizon NH Tariff NHPUC No. 84. Second, the petition challenges the lawful application of switched access charges under Tariff NHPUC No. 85 and, in particular, application of the carrier common line element when Verizon NH provides a switched access service that does not involve a Verizon NH end-user and does not use a Verizon NH loop. For the reasons stated in Section III of my testimony, BayRing's contentions regarding the lawful application of the CCL are entirely misplaced.

Q. PLEASE EXPLAIN SWITCHED INTERCONNECTION AND TANDEM TRANSIT SERVICES?

A. Switched interconnection service is provided by Verizon NH to a telecommunications carrier (or "TC," also referred to as a competitive LEC or "CLEC") under Tariff NHPUC No. 84 where an effective interconnection agreement is not in place. Switched interconnection service provides the TC with access to Verizon NH's network where the TC can exchange traffic with Verizon NH either at the line-side of a Verizon NH end office switch (known as "Meet Point C"), the trunk-side of a Verizon NH end office switch (known as "Meet Point A"), or the trunk-side of a Verizon NH tandem switch (known as "Meet Point B"). Part C, Section 1.3.3 of the tariff, also provides an option for Meet Point B switched interconnection arrangements, allowing calls originated by one TC to be routed to a Verizon NH tandem for delivery by Verizon NH to another TC also having a Meet Point B switched interconnection arrangement at the same Verizon NH tandem or to an independent telephone company ("ITC"). This Meet Point B switched

interconnection option is referred to as tandem transit service (or "TTS"), which is also described in Part A of the tariff as:

> **Tandem Transit Service**—An offering provided by the Telephone Company to requesting competitive LECs that enables the TC whose customer originated an intraLATA call destined for a customer of another LEC (not a customer of the Telephone Company) to utilize a Telephone Company tandem switch as a means of establishing connectivity with the terminating competitive LEC. Tandem transit service is not applicable to calls that utilize an interexchange carrier for which interconnection with either the originating and/or terminating LEC(s) are provided pursuant to meet point billing, while service to the interexchange carrier is provided pursuant to switched exchange access service tariffs or other applicable contract arrangements. [Part A, Section 1.3.2.]

While Verizon NH is not obligated to provide TTS under the interconnection provisions of the Telecommunications Act of 1996 or FCC rules implementing the Act, Verizon NH provides TTS on a voluntary basis as a means for a TC to interconnect indirectly with the facilities of other carriers for the express purpose of exchanging local traffic pending establishment of direct interconnection arrangements between those providers. TCs may chooseVerizon NH's TTS offering to interconnect indirectly with other carriers but these carriers should not be permitted to change the terms, application or use of this voluntary service arrangement.

Significantly, these switched interconnection services are expressly limited to the transport and termination of ***local*** calls on one party's network that originate from the other party's network. For example NHPUC No. 84, Part C, Section 1.1.1, provides:

> Switched interconnection services may only be used for the termination of ***local*** calls to NXXs served on the Telephone Company's network, including calls redirected from the TC to the Telephone Company under Number Portability that otherwise meet the criteria described in Part B, Section 11. [Section 1.1.1.C., emphasis added.]

Q. CAN THE FACILITIES USED FOR SWITCHED INTERCONNECTION SERVICES BE USED TO TRANSPORT OTHER TYPES OF TRAFFIC?

A. Yes. To avoid the need for a TC to install separate facilities to handle other types of traffic, such as toll calls, Verizon NH has provided in Tariff NHPUC No. 84 that the physical facilities used to provide switched interconnection service can also be used to deliver toll and/or switched access traffic to Verizon NH. For example, Part C, Section 1.1.1.C., of NHPUC No. 84 states:

> Facilities used to provide switched interconnection services may be used to deliver toll, and/or interexchange traffic as provided in Section 1.7.3 following. Toll and Interexchange Switched Access Services that terminate on Switched Interconnection facilities will be rated under the appropriate State and/or Federal Tariffs ("Feature Group Service").

Comparable provisions are also contained in NHPUC No. 84, Part C, Section 1.1.1.D, Section 1.3.1, and Section 1.7.3.

When toll and switched access are combined on the same trunks used to exchange local traffic, NHPUC No. 84, Part C, Section 1.1.1.C.1, specifies that toll and switched access are rated under the appropriate state and/or federal tariffs for the switched access feature group service being provided.

Q. WHY ARE TOLL OR SWITCHED ACCESS CALLS, ORIGINATED BY ONE TC AND ROUTED TO A VERIZON NH TANDEM FOR DELIVERY

TO ANOTHER TC OR LEC'S END-USER, NOT SWITCHED INTERCONNECTION TANDEM TRANSIT SERVICE?

A. As explained above, switched interconnection service may be used only for the transport and termination of ***local*** calls on one party's network that originated on the other party's network, as established by NHPUC No. 84, Part C, Section 1.1.1. Although toll and switched access can be combined on the same trunks used for the exchange of local traffic, NHPUC No. 84, Part C, Section 1.1.1.C.1, requires that toll and switched access traffic must be rated under the appropriate state and/or federal tariffs for the switched access feature group service being provided.

NHPUC No. 84, Part C, Section 1.1.2.B, likewise specifies that when the TC uses such combined trunks for local, toll and/or switched access traffic, the rates and charges described in NHPUC No. 84 for switched interconnection services **only** apply to the local traffic of the TC:

> When the TC uses combined trunk groups as described in Section 1.7.3, the rates and charges described below will only apply to the local traffic of the TC. The local traffic will be determined based on the data provided as described in Section 1.7 following.[1]

Thus, while the tariff permits combining local traffic and toll or switched access traffic on the same tandem trunk groups, it is also clear that switched interconnection TTS rates and charges apply only when **local** traffic is exchanged with another TC or an ITC. Conversely, as specified by NHPUC No. 84, Part C,

[1] The TC is obligated under the tariff to provide usage percentage factors for the nature of the traffic carried over the combined trunks or usage details so that the proper charges can be applied for each type of traffic. Indeed, where the TC fails to report or provide the requisite information to determine billing, the traffic is rated as access. BayRing (and other carriers) have been providing the requisite information, thus evidencing their knowledge of the tariff requirements to properly report the nature of the types of traffic.

Sections 1.1.1.C and 1.1.2.B, state and/or federal switched access tariffs apply for a TC's use of Verizon NH's network in the provision of its toll service (for the exchange of toll traffic with another TC or ITC) and the provision of its switched access service (for the exchange of traffic associated with the toll service of another TC, ITC or an interexchange carrier).

Also, Part A, Section 1.3.2, of the tariff explains that TTS is not applicable for calls involving an interexchange carrier where interconnection with either the originating and/or terminating LEC(s) are provided pursuant to Meet Point Billing. In such instances, service to the interexchange carrier is provided pursuant to switched exchange access service tariffs:

> Tandem transit service is not applicable to calls that utilize an interexchange carrier for which interconnection with either the originating and/or terminating LEC(s) are provided pursuant to meet point billing, while service to the interexchange carrier is provided pursuant to switched exchange access service tariffs or other applicable contract arrangements. [Part A, Section 1.3.2.]

In short, BayRing's claim that such traffic is not switched access under NHPUC No. 85, but rather TTS purchased under NHPUC No. 84, is unfounded and not consistent with the express language of the tariff approved by this Commission.

Q. ARE THERE OTHER FLAWS WITH BAYRING'S POSITION?

A. Yes. BayRing's argument is based on the false premise that a provider of originating or terminating switched access service must have its own end-user on the originating or terminating end of the call. As explained above, this premise is wrong and is inconsistent with the terms and conditions of Tariff Nos. 84 and 85.

Moreover, while switched access Tariff No. 85 provides for the TC's use of Verizon NH facilities to originate or terminate the TC's toll services from or to a Verizon NH end-user, it does not require such use and is not limited to instances involving a Verizon NH end-user. That is precisely why such limitations are not documented in the tariff. In fact and practice, switched access is also applicable where Verizon NH is collaborating with another TC, ITC or other carrier to provide the TC, whose end-user originates a non-local call, with transmission and switching for the purposes of terminating non-local toll calls. This is switched access service pursuant to Tariff NHPUC No. 85, which applies according to Section 2.1 when carriers use Verizon NH's network to provide their toll services. In fact, applying the logic of BayRing's petition, originating or terminating switched access charges would never apply to any Meet Point Billing arrangement where an ITC or CLEC collaborate with Verizon NH to jointly furnish switched access transport for an interexchange carrier that provides its toll service to a non-Verizon NH end-user. This is unsupported and inconsistent as Meet Point Billing arrangements for the joint provision of switched access service by multiple exchange carriers is an industry standard practice that has been in place for over 20 years and is in place in every other jurisdiction in which Verizon operates.

Q. DOES VERIZON NH'S SWITCHED INTERCONNECTION TARIFF NO. 84 MAKE CLEAR DISTINCTIONS BETWEEN LOCAL TRAFFIC AND TOLL TRAFFIC?

A. Yes. The distinction is necessary because NHPUC No. 84 only provides for the use of Verizon NH's network by TCs for switching and transmission of local traffic and NHPUC No. 85 provides for the use of Verizon NH's network by carriers for switching and transmission of toll or switched access traffic. Because the tariff clearly states that switched interconnection service, and its associated rates including TTS, apply only to the exchange of local traffic, while toll and switched exchange access traffic is rated under the appropriate access services tariff, a clear distinction is made in the tariff between "local" and "toll" traffic.

Part A, Section 1.3.2 of NHPUC No. 84, for example, defines local traffic as a call that originates and terminates within a local calling area as defined in NHPUC No. 83, Part A, Section 6.[2] The same tariff section also describes "toll service" as that which is defined in the Telecommunications Act and, for purposes of the tariff, treats all calls for which toll dialing parity applies as "toll service." The Telecommunication Act, in turn, defines toll service as **"telephone service between stations in different exchange areas** for which there is made a separate charge not included in contracts with subscribers for exchange service." 47 U.S.C. 153 (emphasis added).

These distinctions are important for the proper application of the tariff and draw bright lines between switched interconnection TTS, which applies only to the exchange of **local** traffic, and switched access, which applies to the exchange of (1)

[2] The tariff also provides that IntraLATA calls originated on a presubscription (i.e., 1+ dialed) or casual dialed (i.e., 10XXX/101XXXX+) basis; calls to ported numbers redirected from Verizon NH to the TC or from the TC to Verizon NH; and calls delivered to Internet service providers are **not** considered local traffic.

toll traffic and/or switched exchange access traffic dialed on a 1+ presubscribed or 10XXX/101XXXX casually-dialed basis and (2) calls that utilize an interexchange carrier, where the originating or terminating TC and Verizon NH are providing access pursuant to a Meet Point Billing arrangement.[3]

Therefore, contrary to BayRing's claim, non-local calls that originate from one TC and terminate to another TC, using a Verizon NH tandem arrangement to deliver the call, are provided as switched access and not as switched interconnection TTS under the terms of Tariff No. 84. Verizon NH provides the TC with transmission and switching for the purposes of originating or terminating **toll** service, which under the tariff is switched access service pursuant to NHPUC No. 85 – **not** No. 84. Likewise, non-local calls originating from or terminating to a TC, using a Verizon NH tandem arrangement to deliver the call to or from an interexchange carrier, are also provided as switched access and not as switched interconnection TTS under the terms of NHPUC No. 84.

Q. IN ADDITION TO THE EXPRESS LANGUAGE OF THE TARIFF, ARE THERE COMPELLING LEGAL AND POLICY REASONS CONTRADICTING BAYRING'S CONTENTION THAT THE SERVICE PROVIDED BY VERIZON NH IS NOT SWITCHED ACCESS BUT RATHER TANDEM TRANSIT SERVICE?

[3] NHPUC No. 84, Part A, Section 1.3.2, specifically provides that switched exchange access service is the "offering of transmission or switching services to TCs for the purposes of the origination or termination of telephone **toll** service."

A. Yes. There are several federal and New Hampshire-specific rulings that contradict BayRing's contentions. First, under the Telecommunications Act, telecommunications carriers have a duty "to interconnect directly or indirectly with the facilities and equipment of other telecommunications carriers." Section 251(a)(1). All local exchange carriers have the "duty to establish reciprocal compensation arrangements for the transport and termination of telecommunications." Section 251(b)(5). Incumbent local exchange carriers also have the duty to provide "interconnection with the local exchange carrier's network – (A) for the transmission and routing of telephone exchange service and exchange access." Section 251(c)(2). In implementing these provisions of the Telecommunications Act, the FCC has determined that *interconnection* services for the exchange of **local** traffic are different than *access* services for **toll** traffic:

> We conclude, however, as a legal matter, that transport and termination of **local** traffic are different services than access for long distance telecommunications.... The Act preserves the legal distinctions between charges for transport and termination of **local** traffic and interstate and intrastate charges for **long-distance** traffic. [Local Competition Order at 1033, emphasis added.]

Second, the FCC explained that access charges were developed to address situations in which multiple carriers collaborate to complete a long-distance call, typically involving an originating LEC or LECs, an interexchange carrier and a terminating LEC or LECs. Rather than switched interconnection service, which is only applicable to the exchange of local traffic, the FCC determined that the exchange of traffic for non-local calls would be subject to interstate and intrastate access charges:

> [S]tate commissions have the authority to determine what geographic areas should be considered "local areas" for the purpose of applying reciprocal compensation obligations under section 251(b)(5), consistent with the state commissions' historical practice of defining local service areas for wireline LEC's. Traffic originating or terminating outside of the applicable local area would be subject to interstate and intrastate access charges. [Local Competition Order at 1035.]

Q. HAS THE NEW HAMPSHIRE PUBLIC UTILITIES COMMISSION ALSO MADE SIMILAR DETERMINATIONS?

A. Yes. First, Verizon NH filed revisions to its access services tariff, NHPUC No. – 78, that went into effect March 21, 1991 in compliance with the Commission's Order No. 20,007 in Docket DE 90-002. In that Order, the Commission approved NET's intrastate switched access service tariff applicable to the four interexchange carriers (AT&T, LDN, MCI and U.S. Sprint) that had been permitted on an interim basis to provide competitive toll services. Sections 1.1 and 1.2 of the tariff specified that switched access service is provided to interexchange carriers, including resellers or other carriers certified by the Commission, that use Verizon NH's network to provide toll service. In essence, Order No. 20,007 authorized those four carriers to provide toll services on an interim basis, pending further investigation into opening the New Hampshire market to intrastate toll competition. By approving Verizon NH's access service tariff, the Commission specifically authorized and required Verizon NH to provide switched access to carriers that use Verizon NH's network for the purpose of providing **toll** services.

1 In its September 27, 1993 Order No. 20,980 in Docket DE 90-002 ("Order
2 Authorizing Access Rates for All New Hampshire Local Exchange Carriers"), the
3 Commission approved NET's Tariff No. 78, filed on August 16, 1993 and effective
4 October 1, 1993. These compliance provisions replaced the interim access tariff
5 applicable to toll providers, implementing the Commission's previous Orders[4],
6 which set the foundation for intrastate access charges and toll competition in New
7 Hampshire. Sections 1.1 and 1.2 of the approved access tariff continued to specify
8 that switched access service is provided to interexchange carriers, including resellers
9 or other entities certified by the Commission, where the carrier uses Verizon NH's
10 network to provide its services – reflecting the Commission's policy on access
11 charges to be applied for the provision of competitive toll services.

12 Subsequent versions of Verizon NH's access service tariff (NHPUC No. 79
13 and NHPUC No. 85) also contained this language in their respective "General
14 Regulations" sections, including the governing tariff currently in effect. (Copies of
15 the relevant tariffs were provided during discovery[5] and are provided as Exhibit I
16 attached to this testimony.) Moreover, in its Order No. 24,080, the Commission
17 determined, at least for non-ISP bound traffic exchanged between carriers, that such
18 traffic shall continue to be designated as local or toll based on the physical location
19 of the end-users. While the Commission determined that CLEC local calling areas
20 do not need to mirror the ILEC local calling areas, the payment of switched access

[4] Report and Order No. 20,864 issued June 3, 1993 and Report and Order No. 20,916 issued August 2, 1993, Docket DE 90-002, Generic Investigation into IntraLATA Toll Competition Access Rates.

[5] Verizon NH Reply to One Communications' First Set of Data Requests, Item 1-1.

1 service charges (for toll traffic) and interconnection reciprocal compensation charges
2 (for local traffic) associated with the exchange of non-ISP traffic will be assessed
3 according to the definition of the ILEC local calling areas.[6] (Exhibit II contains
4 copies of the Orders or relevant portions referenced throughout this testimony.)

5 In short, the Commission has unambiguously recognized in various
6 proceedings that switched access service applies to toll calls where a carrier uses
7 Verizon NH's network in the provision of a toll service. The types of traffic subject
8 to switched access are clearly specified in Verizon NH's intrastate tariffs and have
9 been consistently applied by Verizon NH accordingly.

10 **Q. WHAT CONCLUSIONS SHOULD THE COMMISSION REACH?**

11 A. Under the terms of both Tariff No. 84 and No. 85, it is clear that the service
12 provided by Verizon NH is switched access and not switched interconnection TTS.
13 It is also clear that where Verizon NH provides transmission and switching services
14 for a carrier's use in completing toll calls, Verizon NH is providing switched access
15 for the exchange of toll traffic. It is also the case that switched interconnection TTS
16 **only** applies for the exchange of local traffic.[7] In light of prior FCC determinations
17 and determinations of this Commission, the Commission must enforce the tariff as

[6] DT 00-223 Investigation as to Whether Certain Calls are Local at 56-58 ("FURTHER ORDERED, that reciprocal compensation or access charges shall be due for non-ISP bound traffic in accordance with the ILEC local calling areas" at 60-61).

[7] Not surprisingly, no other intervenor in this docket has taken a similar position and claimed that the applicable service is TTS. See AT&T Supplemental Response to VZ-ATT 1-2 and One Communications Supplemental Response to Verizon 1-2.

written and find that switched access is the relevant service which Verizon NH is providing.

III. VERIZON NH'S TARIFF REQUIRES PAYMENT OF ACCESS RATE ELEMENTS, INCLUDING THE CCL CHARGE, ON ALL INTRASTATE SWITCHED ACCESS PROVIDED TO CARRIERS.

Q. DOES VERIZON NH'S ACCESS SERVICE TARIFF NO. 85 REQUIRE PAYMENT OF CARRIER COMMON LINE CHARGES ON ALL SWITCHED ACCESS SERVICE?

A. Yes. The tariff is explicit that a carrier common line charge applies and is billed for each switched access service provided under the tariff. This requirement is stated at the beginning of Section 5.1, which prescribes that: "Carrier common line access service **is billed to each switched access service** provided under this tariff…" (emphasis added).

Section 5.4.1 also specifies that the carrier common line charge applies to all switched access: "Except as set forth herein, **all switched access service provided to the customer will be subject to carrier common line access charges**." Section 5.4.1.A (emphasis added). This is further reinforced by additional terms in Section 5.4.1[8] and Section 5.3.1[9], describing that carrier common line rates and charges

[8] "When access to the local exchange is required to provide a customer service (e.g., MTS type, Telex, Data, etc.) that uses resold IC's private line service, switched access service rates and regulations as set forth in Section 6 will apply except when such access to the local exchange is required for the provision of an enhanced service. **Carrier common line access rates and charges apply**." Section 5.4.1.B, emphasis added.

[9] "Where the customer is reselling MTS and/or MTS type service(s) on which the carrier common line access and switched access charges have been assessed, the customer will obtain FGA, FGB or FGD switched access service under this tariff (refer to Section 6) for originating and/or terminating access in the

apply to switched access provided to resellers of "MTS" (i.e., toll) type and interexchange carrier private line services.

Section 5.4.1 also goes on to explain that carrier common line rates and charges will be billed to all intrastate switched access service provided under this tariff for switched access provided through (1) a Meet Point Billing arrangement[10], (2) WATS or WATS-type service[11], and (3) non-800 originating and terminating minutes as well as 800 originating and terminating minutes.[12]

Language was placed in all of these sections to underscore the principle that carrier common line charges apply for all types of switched access calls.

Q. HOW DOES THE ACCESS TARIFF PRESCRIBE THAT CARRIER COMMON LINE CHARGES APPLY FOR ALL MEET POINT BILLING SWITCHED ACCESS MINUTES?

---

local exchange. Such access group arrangements whether single trunks or trunk groups **will have carrier common line access charges applied.**" Section 5.3.1, emphasis added.

[10] "The switched access service provided by the Telephone Company includes the switched access service provided for both interstate and intrastate communications. **The carrier common line access rates and charges will be billed to each switched access service provided under this tariff** in accordance with Section 4.1 and Section 5.4.2." Section 5.4.1.C, emphasis added.

[11] "Where switched access services connect with private line type services at Telephone Company designated WSOs for provision of WATS or WATS type services, switched access service minutes which are carried on that end of the service (i.e., originating minutes for outward WATS and WATS type services) **will be assessed carrier common line access per minute charges.**" Section 5.4.1.D, emphasis added. (WATS is an acronym for Wide Area Telecommunications Service.)

[12] Section 5.1.4.C also makes reference to Section 5.4.2 for the application of carrier common line charges to all switched access minutes. This section provides that the CCL charge applies to **all** originating and **all** terminating non-800 minutes, and **all** 800 data base access minutes, whether ultimately terminating to a common line 800 service or a WAL 800 service. (WAL is an acronym for WATS or 800 Service dedicated access line.)

A. NHPUC No. 85, Section 5.4.1.C's reference to Section 4.1 pertains to billing matters, generally, and to the application of the carrier common line charge, specifically, for all intrastate switched access provided through a Meet Point Billing arrangement with another local exchange carrier:

> Meet Point Billing - Where more than one exchange telephone company is involved in the provision of access service, the Telephone Company will bill such access services in accordance with the regulations set forth in Section 3.1. [Section 4.1.12.A.]

Section 3.1 further explains the application of Meet Point Billing as it relates to the joint provision of transport and that all other switched access charges apply according to the local exchange carrier's access tariff:

> Each exchange telephone company will provide the portion of the local transport element in its operating territory to an IP [interconnection point] with another exchange telephone company and will bill the charges in accordance with its access service tariff. The charges for the local transport element will be determined as described in Section 3.1.2K and 3.1.2L. **All other appropriate charges in each exchange telephone company tariff are applicable.** [Section 3.1.2.D, emphasis added.]

These provisions were included in the tariff to highlight the requirement that carrier common line charges apply to all switched access service, including Meet Point Billing arrangements, and that, while local transport receives a special calculation, other switched access charges including CCL are required by the tariff.

Q. WHY DOES THE TARIFF REQUIRE THE APPLICATION OF THE CARRIER COMMON LINE CHARGES TO ALL SWITCHED ACCESS MINUTES?

A. When initially proposed in the Commission's Generic Competition Docket, DE 90-002, the intrastate tariff (and its successors) were developed to mirror in large part the structure of the interstate switched access tariff. The intent at the time was to have as much commonality with the interstate tariff as possible for ease of administration and customer understanding, while allowing the flexibility to tailor provisions of the tariff to requirements specific to New Hampshire, including important public policy objectives. The major difference in the New Hampshire intrastate tariff was the establishment of the carrier common line rate element as a vehicle to provide contribution **equivalent to the contribution obtained from toll rates and charges**, rather than as a charge for the carrier's use of Verizon NH's common lines and associated costs – as in the interstate tariff. Significantly, the intrastate CCL element was adopted in the Generic Competition Docket to promote the important public policy objective of retaining contribution for the support of services like basic residence exchange, which had traditionally been supported through toll rates.

While the tariff also permits a toll provider to use a Verizon NH common line to provide competing toll service to a Verizon NH end-user, this does not diminish the fact that the CCL rate element was never designed for or limited to the recovery of costs related to the use of end-user loops. Rather, as I will explain further, it was, and still is, a rate element designated exclusively **to provide a level of contribution targeted to an overall rate level** and was set on a residual basis to obtain the targeted contribution levels upholding this important public policy objective. That is

why the tariff language explicitly and repeatedly spells out the requirement that carrier common line charges apply to **all** switched access usage.

Q. PLEASE EXPLAIN THE DEVELOPMENT OF THE CARRIER COMMON LINE RATE ELEMENT.

A. When access charges were adopted in DE 90-002, NET explained that as toll competition was introduced in New Hampshire, it was important that the revenue contribution supporting exchange services that had been traditionally provided by toll services be maintained regardless of whether NET or a competitor provided the toll services. As NET's Mr. Michael McCluskey testified in that proceeding (discussed further below), a necessary ingredient to the introduction of toll competition in New Hampshire was setting an economically efficient relationship between toll and access.[13] , The purpose of that rate structure was to provide equivalent levels of contribution through a new switched access charge contribution element, reflecting contribution that would otherwise be provided by NET toll services in the absence of competition. In other words, to support rates for other services under rate of return regulation, NET recommended the introduction of originating and terminating carrier common line as contribution rate elements to NET's switched access tariff. The first set of switched access charges approved by the Commission only contained elements for local switching and local transport, and the contribution was built into each rate element for these specific functions. This

[13] Exhibit III attached to my testimony contains excerpts of all the DE 90-002 testimony referenced within this testimony.

was done by using the average rate per minute for toll, reflecting its contribution, as the basis for setting the rates for the switched access elements. In short, the same level of support to exchange rates was provided whether NET provided the toll service on a retail basis or whether another carrier provided the toll service by using NET's access services.

When NET made its proposal for permanent access charges in DE 90-002, it recommended a change in the access structure. Instead of having all local switching and local transport rates discretely include contribution, NET proposed setting these rates at incremental cost levels, and establishing originating and terminating carrier common line rates **solely** as a contribution element. As NET's witness explained:

> In addition to the local switching and local transport element, the Company is introducing originating and terminating carrier common line elements **which reflect contribution**. The sum of the cost-based local transport and local switching rate elements which would apply on an end-to-end basis would fall far below the retail rates, since the sum would contain no contribution beyond incremental cost. **The sole purpose of the carrier common line rate element** is to bring the end-to-end access rate from the incremental costs of transport and switching up to a level which results in the proper relationship between toll and access. [McCluskey Testimony at 12-13, emphasis added.]

The testimony went on to note that obtaining contribution from the carrier common line element equivalent to the contribution in toll rates, under NET's proposal, was necessary to promote rate continuity since only the interim access rates would be affected and no other rates, including exchange rates, would require any changes.

In addition, further support of NET's position was provided in testimony in the Generic Competition Docket by Dr. William Taylor, who was asked by NET to

review the proposed tariff structure from the perspective of an economist. When asked whether the proposal to isolate and recover contribution solely through originating and terminating carrier common line elements for switched access had an economic rationale, Dr. Taylor testified:

> The required level of contribution from access charges will be obtained through originating and terminating carrier common line charges -- **which are effectively non-cost-based charges levied on all toll carriers for interconnecting with the NET network.** The advantage of isolating the required contribution into charges for interconnection (at the originating and terminating ends) is that it minimizes the distortion caused by pricing carrier access above incremental cost. [Taylor Testimony at 4, emphasis added.]

Thus, the proposed switched access tariff rate design and structure for CCL – which the Commission approved – was intended to be an element that solely applied for the purpose of obtaining contribution from all toll providers using NET's network and was **not** a cost-based element designed to recover costs associated with the use of NET common lines.

Moreover, based on this rate structure design, I filed testimony on May 1, 1992 concerning the actual rate development for switched access rates. In my testimony I explained that:

> NET's proposal consists of two switched rate element categories. The first category comprises the network-based "traffic sensitive" elements of Local Transport and Local Switching. The second category is the Carrier Common Line element which is an element **designed to provide contribution and establish the correct overall price relationship, based on the difference in cost to provide the retail versus wholesale service.** [Shepherd Testimony at 4, emphasis added.]

I also explained that the carrier common line element was designed solely as a contribution element and that it was more appropriate to isolate contribution to these elements, rather than from the traffic sensitive network elements that would be priced at an incremental cost-based level. I explained this was:

> "... in order to establish the proper price signals to the market and facilitate the appropriate retail/wholesale linkage for any future transition of these retail and wholesale prices towards the overall level of their costs." [Shepherd Testimony, at 5.]

Thus, it was abundantly clear when the access charges were established by NET and adopted by this Commission that the CCL charge was not intended to recover costs for use of specific components of NET's network (as were the local switching and transport charges). Rather, the CCL charge was set and was to be applied to ensure that the use of NET's network for toll services by any carrier continued to provide the same level of contribution to exchange services as when NET was the only provider of toll services. As noted above, this policy is furthered by having the CCL charge apply to all access services as clearly specified in the new Section 3.5:

> Except as set forth herein, **all Switched Access Service provided to the customer will be subject to Carrier Common Line Access charges.** [Emphasis added.]

The only exception applied to the provision of enhanced services, in which case switched access charges, including the CCL, were not applicable.

Q. IS THERE OTHER EVIDENCE THAT THE CARRIER COMMON LINE ELEMENT WAS INTENDED SOLELY AS AN ELEMENT TO OBTAIN

CONTRIBUTION FROM ALL SWITCHED ACCESS USAGE RATHER THAN AS AN ELEMENT SPECIFIC TO THE USE OF END-USER COMMON LINES?

A. Yes. In its August 21, 1992 rebuttal testimony in the Generic Competition docket, NET re-emphasized that:

> [T]he Company's proposal to establish the traffic sensitive switched access rates at the level of incremental costs **and recover contribution through a separate originating and terminating carrier common line rate element** is more appropriate and will facilitate future transitions of toll and access rates in the direction of overall incremental costs in response to competitive market forces. [McCluskey Testimony, at 32, emphasis added.]

Also, Mr. McCluskey and I testified at hearings that the carrier common line charge was solely a contribution element, **set on a residual basis to establish the overall access charge rate level** for originating and terminating switched access, and not a charge based on the cost of or use of access lines. (Examples are included as Exhibit IV to this testimony.[14]) Unlike the interstate tariff, the proposed intrastate switched access tariff's CCL charge was solely an element to provide contribution applicable to all switched access minutes of use:

> The carrier common line element is an element that applies on both an originating and a terminating basis to the extent that the carrier uses the local exchange carrier switched network." [12/3/1992 Day XIV, Shepherd Cross-Examination at 86.]

Specific language was included in the proposed switched access tariff which was also carried forward to the tariff ultimately approved by this Commission and its

[14] DE 90-002 Transcript Day X at 199-200, 224-226, 230-232; Day XII at 196-198, 202-214; Day XIII at 12, 24-26, 169-171; Day XIV at 48-52, 74-82, 84-89, 98-106.

1 successor tariffs, specifying that carrier common line applies to **all** switched access
2 for a carrier's use of NET's (now Verizon NH's) local exchange switched network,
3 supporting the rate design objectives.

4 **Q. WAS NET'S SWITCHED ACCESS TARIFF THAT THE COMMISSION**
5 **APPROVED THE OUTCOME OF A NEGOTIATED SETTLEMENT IN DE**
6 **90-002?**

7 A. Yes. The signatories[15] negotiated a host of issues in their Stipulation and
8 Agreement, resolving a number of matters in the proceeding. Among them were the
9 structure and rates for the local exchange carriers' switched access tariffs. The
10 Stipulation regarding NET's switched access rate design, structure and rate levels
11 was a compromise from NET's initial position in the case. Rather than linking the
12 contribution in the overall originating and terminating switched access rate to NET's
13 retail toll and 800 services, Section IIIA of the Stipulation established overall
14 switched access transitional rate targets to reduce, in four phases, the overall rate to
15 an equivalent interstate average rate per minute. However, the stipulated rate design
16 and structure did **not** depart from the fundamental objective of establishing local
17 transport and local switching rates at incremental cost and isolating the carrier
18 common line element to provide contribution.

---

[15] Commission Staff, Office of Consumer Advocate, Business and Industry Association, AT&T Communications of New England Inc., Long Distance North of New Hampshire Inc., MCI Telecommunications Corp., Sprint Communications Company of New Hampshire Inc., Bretton Woods Telephone Company, Dunbarton Telephone Company Inc., Granite State Telephone Inc., Merrimack County Telephone Company, Wilton Telephone Company Inc., Chichester Telephone Company, Kearsarge Telephone Company, Meriden Telephone Company Inc., Union Telephone Company, Contel of NEW HAMPSHIRE Inc. dba GTE New Hampshire, Contel of ME Inc. dba GTE Maine, and New England Telephone and Telegraph Company were signatories.

1 In developing Attachment 2 of the Stipulation, the signatories' rate design set
2 overall end-to-end as well as terminating access rate targets for non-800 switched
3 access.[16] The contribution to be recovered in the originating and terminating carrier
4 common line rates was then established residually by removing the incremental cost
5 based rates for local switching and local transport.

6 That rate design – and the fact that the carrier common line rate elements
7 were residually set to provide contribution – were also established in testimony
8 provided through a witness panel explaining key aspects of the Stipulation and
9 Agreement.[17] In explaining the Attachment 2 described above, Mr. Salvatore
10 (AT&T's expert witness) was questioned by Mr. Gary Cohen, one of the
11 Commission's retained outside counsel, regarding the rate design and rate
12 development. The testimony again established that the carrier common line elements
13 were designed as contribution elements – rather than a mechanism to recover the cost
14 of using a local loop.[18]

---

[16] The same principle was followed in establishing the CCL rate for originating and terminating 800 switched access.

[17] On March 22, 1993, a panel of witnesses testified about the Stipulation and Agreement in a hearing before the Commission in DE 90-002. The panel consisted of AT&T's witness Mr. William Salvatore representing interexchange carriers, Ms. Kate Bailey for the Commission Staff, Mr. Michael Campbell representing New Hampshire Independent Telephone Companies and myself on behalf of NET.

[18] Questioned by Mr. Cohen:

Q During the hearings if I recall the testimony from Mr. Shepherd and Mr. McCluskey in terms of a carrier common line element, they talked in terms of a contribution element **as opposed to anything geared to the local loop**.

A (Salvatore) As I said, traditionally the carrier line charge was a charge for the local loop. Mr. Shepherd can help me with this, the way the elements themselves are structured is that the local transport and local switching elements are set at incremental costs. **The remainder of the access charge is put into the carrier common line charge. So, one could think of it as a contribution element.**

Q So what you are saying, you're not suggesting that the loop is priced at incremental cost, are you?

1 Based on the evidence, the Commission ultimately approved a Stipulation
2 and its associated rate design and rate structure as explained above.[19] NET
3 submitted its compliance tariff on August 16, 1993, which was approved by the
4 Commission[20] and became effective October 1, 1993.

5 That tariff and its successor tariffs have **all** been based on the access charge
6 framework established in DE 90-002, utilizing the carrier common line as a
7 contribution element that was intended to replace contribution NET would otherwise
8 have recovered from toll. The approved tariff provided that carriers using NET's
9 switched network to provide competitive toll services would be subject to switched
10 access charges including the CCL. The tariff language today is a product of the
11 access charge structure determined in DE 90-002 and is clear in its application.
12 Nothing has occurred over the course of time to alter these determinations, and they
13 are just as appropriate today as they were in 1993.

14 **Q. HAS VERIZON BEEN A PARTY TO A SIMILAR ADJUDICATION IN ANY**
15 **OTHER STATE JURISDICTION?**

16 A. Yes. Verizon New York was involved in a similar complaint regarding
17 application of its access Tariff PSC NY No. 11 in Case No. 04-C-1548. In that

---

A (Salvatore) No, I'm saying that the local transport and the switch are priced at incremental cost. **Carrier common line is the difference between the incremental cost for local switching and the incremental costs of local transport to get to the 16 cent total access charge.**
Q So it's the remainder?
A (Salvatore) It is the remainder. I used the term "residual." [Day XV Transcript at 19-20, emphasis added.]

[19] Report and Order Nos. 20,864 issued June 3, 1993 and 20,916 issued August 2, 1993.

[20] Order No. 20,980 issued September 27, 1993.

1 proceeding WilTel Communications filed a complaint with the New York Public
2 Service Commission regarding the tariff's application of carrier common line and
3 local switching charges on calls terminating to wireless carriers. WilTel made
4 essentially the same claim as BayRing does here - it was inappropriate for Verizon
5 New York to charge the CCL when Verizon New York does not provide the local
6 switching or local loop service.

7 The New York Public Service Commission rejected WilTel's complaint. The
8 commission found that the application of the CCL was consistent with its prior rate
9 determination and that the tariff permitted Verizon New York to assess the disputed
10 charges. The same factors are present here. The CCL was set by this Commission to
11 achieve a specific policy objective and was not tied to the use of specific pieces of
12 Verizon NH's network. And, Verizon NH's tariff is clear that the CCL applies to all
13 switched access services.

14 **Q. WHAT WOULD THE FINANCIAL IMPACT BE TO VERIZON NH AND ITS**
15 **RATEPAYERS IF THE COMMISISON WERE TO FIND OTHERWISE?**

16 A. Verizon NH's February 8, 2007 compliance response to the Commission's
17 Procedural Order No. 24,705 provided general order of magnitude estimates of the
18 potential financial impact to Verizon NH and its ratepayers if the Commission were
19 ultimately to decide that Verizon NH had not properly applied the tariff. Verizon
20 NH estimated that CCL charges of approximately **[begin proprietary]** **$*** million**
21 **[end proprietary]** were billed to carriers for intrastate switched access where

Verizon NH was not the provider of the end-users' access lines for the two-year period January 2005 through December 2006. Verizon NH also estimated that the annual impact to Verizon NH and it ratepayers if the disputed charges were no longer collected prospectively would be approximately **[begin proprietary]** **$*** million** **[end proprietary]** per annum. This would represent a serious, further downward earnings-impact to Verizon NH's latest Commission reported earnings deficit for operations in the State of New Hampshire. Eliminating this important source of contribution could necessitate offsetting increases to other rates.

IV. CONCLUSION

Q. HOW SHOULD THE COMMISSION PROCEED WITH THIS CASE?

A. The Commission should deny BayRing's complaint. As demonstrated in this testimony, the service at issue is not switched interconnection tandem transit service, which only applies for the delivery of **local** traffic. Rather, the service is switched access service, which applies to the use of Verizon NH's switched network for the transmission and switching of another carrier's **toll** traffic. The application of the access tariff approved by the Commission is consistent with the access charge framework and structure established in the Generic Competition investigation, Docket DE 90-002. That proceeding established Verizon NH's carrier common line element solely as a contribution element applicable to all switched access usage. The language of the approved tariff specifies that **all** switched access is subject to carrier common line charges for that very reason, to provide contribution and support

1 to maintain other ratepayer rates. Nothing has occurred to change the Commission's

2 prior access charge determinations.

EXHIBIT I

REFERENCED TARIFF PROVISIONS CONSISTING OF:

NHPUC No. 78	(Effective 3/21/1991)
NHPUC No. 78	(Effective 10/2/1993)
NHPUC No. 79	
NHPUC No. 85	
NHPUC No. 84	Part A, Section 1.3.2
	Part C, Section 1.1.1.C
	Part C, Section 1.1.2.B
	Part C, Section 1.3.1
	Part C, Section 1.7.3

Note: Paper copies only.

ATTACHMENT
ITEM Onecom 1-1(e)
VZ # 94

March 19, 1991

Ms. Beth Osler
Director-Regulatory

Please arrange to have the following material filed with the New Hampshire Public Utilities Commission to meet the issue date of March 20, 1991.

The Attachment lists the tariff pages affected by this filing.

This filing provides for changes to NHPUC No. 78 necessary to comply with Order No. 20,077 in Docket DE 90-002 dated March 11, 1991 which authorizes intrastate Switched Access Service charges by New England Telephone Company in the state of New Hampshire. These charges will be assessed to the four Interexchange Carriers (AT&T, LDN, MCI and U.S. Sprint) authorized to offer, on an interim basis, a number of specific custom network add on services or to resell intrastate long distance traffic, as specified in consecutive Order Nos. 20,039; 20,040; 20,041 and 20,042.

Attached are the necessary copies of the tariff pages. Please return the receipted duplicates and two copies of Mr. Duffy's transmittal letter to this office for recording and filing in the Secretary's office.

Michael J. McCluskey
Michael J. McCluskey
Director

cc: J. G. Scanlon

5179R

ATTACHMENT

Tariff pages issued March 20, 1991 for effect March 21, 1991 consist of:

P.U.C. - N.H. - No. 78

- Title Page	
- Master Table of Contents	
- Table of Contents	- Second Revision of Page 1
- Tariff Information	- Fourth Revision of Page 1
	- Second Revision of Pages 2 and 3
- Section 1	- Second Revision of Page 1
- Section 2	- Second Revision of Pages 1 through 7
- Section 3	- Second Revision of Page 1
- Section 4	- Second Revision of Pages 1 through 4
	- First Revision of Page 5
- Section 5	- Second Revision of Page 1
- Section 6	- Second Revision of Page 1

0037
FILE

New England Telephone
NYNEX Company

Patrick Duffy

[illegible] Street
[illegible] New Hampshire 03101
[illegible] 641-1860

March 20, 1991

MAR 20 1991

State of New Hampshire
Public Utilities Commission
8 Old Suncook Road
Concord, New Hampshire 03301

Commissioners:

We are submitting the following tariff pages which provide for changes to NHPUC No. 78 necessary to comply with Order No. 20,077 in Docket DE 90-002 dated March 11, 1991 which authorizes intrastate Switched Access Service charges by New England Telephone Company in the state of New Hampshire. The tariff pages issued March 20, 1991 for effect March 21, 1991 consist of:

NHPUC - No. 78

- Title Page	
- Master Table of Contents	
- Table of Contents	- Second Revision of Page 1
- Tariff Information	- Fourth Revision of Page 1
	- Second Revision of Pages 2 and 3
- Section 1	- Second Revision of Page 1
- Section 2	- Second Revision of Pages 1-7
- Section 3	- Second Revision of Page 1
- Section 4	- Second Revision of Pages 1-4
	- First Revision of Page 5
- Section 5	- Second Revision of Page 1
- Section 6	- Second Revision of Page 1

These charges will be assessed to the four Interexchange Carriers (AT&T, LDN, MCI and U.S. Sprint) authorized to offer, on an interim basis, a number of specific custom network add on services or to resell intrastate long distance traffic, as specified in consecutive Order Nos. 20,039; 20,040; 20,041 and 20,042.

Please return the copies of the pages marked "Duplicate" with your stamp of receipt.

Respectfully submitted,
NEW ENGLAND TELEPHONE AND TELEGRAPH COMPANY

Patrick Duffy

NEW ENGLAND TELEPHONE

AND

TELEGRAPH COMPANY

ACCESS SERVICES (C)

REGULATIONS, RATES AND CHARGES

EFFECTIVE IN THE

STATE OF NEW HAMPSHIRE

NEW ENGLAND TELEPHONE AND TELEGRAPH COMPANY

MASTER TABLE OF CONTENTS

NHPUC - No. 78

TARIFF INFORMATION

ACCESS SERVICES (C)

Section 1 - Application of Tariff
Section 2 - General Regulations
Section 3 - Ordering Provisions for Switched Access Service
Section 4 - Switched Access Service
Section 5 - Additional Engineering, Additional Labor and Miscellaneous Services
Section 6 - Operating Territory

ACCESS SERVICES (C)

TABLE OF CONTENTS

	Page No.
Concurring Carriers	1
Connecting Carriers	1
Other Participating Carriers	1
Explanation of Symbols	2
Explanation of Abbreviations	2
1. APPLICATION OF TARIFF	1
2. GENERAL REGULATIONS	1
2.1 Obligations of the IC	1
2.1.1 Jurisdictional Report Requirements	1
2.1.2 Determination of Intrastate Charges for Mixed Interstate and Intrastate Access Service	6
2.1.3 Report Requirements When More Than One Exchange Telephone Company is Involved	7
ORDERING PROVISIONS FOR SWITCHED ACCESS SERVICE	1
4. SWITCHED ACCESS SERVICE	1
4.1 General	1
4.1.1 Rate Elements	1
4.2 Rate Regulations	4
4.2.1 Description and Application of Rates and Charges	4
4.2.2 Measuring Access Minutes	5
4.3 Rates and Charges	5
4.3.1 Local Switching	5
4.3.2 Local Transport	5
5. ADDITIONAL ENGINEERING, ADDITIONAL LABOR AND MISCELLANEOUS SERVICES	1
6. OPERATING TERRITORY	1

ACCESS SERVICES (C)

CONCURRING CARRIERS

BRETTON WOODS TELEPHONE COMPANY

CHICHESTER TELEPHONE COMPANY

CONTEL OF NEW HAMPSHIRE

DIXVILLE TELEPHONE COMPANY

DUNBARTON TELEPHONE COMPANY

GRANITE STATE TELEPHONE COMPANY

KEARSARGE TELEPHONE COMPANY

MERIDEN TELEPHONE COMPANY

MERRIMACK COUNTY TELEPHONE COMPANY

UNION TELEPHONE COMPANY

WILTON TELEPHONE COMPANY

CONNECTING CARRIERS

NO CONNECTING CARRIERS

OTHER PARTICIPATING CARRIERS

NO OTHER PARTICIPATING CARRIERS

REGISTERED SERVICE MARKS	REGISTERED TRADEMARKS
NONE	NONE

ACCESS SERVICES (C)

EXPLANATION OF SYMBOLS

(C) - To signify changed regulation
(D) - To signify discontinued rate or regulation
(I) - To signify increase
(N) - To signify new rate or regulation
(R) - To signify reduction
(S) - To signify the incorporation of material previously effective on a supplement
(T) - To signify a change in text but no change in rate or regulation

EXPLANATION OF ABBREVIATIONS

ac	-	Alternating current
AML	-	Actual Measured Loss
ANI	-	Automatic Number Identification
AT&T-C	-	AT&T Communications
BD	-	Business Day
BHMC	-	Busy Hour Minutes of Capacity
CAROT	-	Centralized Automatic Reporting on Trunks
CI	-	Channel Interface
CO	-	Central Office
COCTX	-	Central Office Centrex
Cont'd	-	Continued
CPE	-	Customer Provided Equipment
Ctx	-	Centrex
dB	-	decibel
dBrnC	-	Decibel Reference Noise C-Message Weighting
dBrnCO	-	Decibel Reference Noise C-Message Weighted O
dBv	-	Decibel(s) Relative to 1 Volt (Reference)
dBv1	-	Decibel(s) Relating To 1 Volt (Reference)
dc	-	direct current
DP	-	Dial Pulse
DTMF	-	Dual Tone Multifrequency
EDD	-	Envelope Delay Distortion
ELEPL	-	Equal Level Echo Path Loss
EML	-	Expected Measured Loss
EPL	-	Echo Path Loss
ERL	-	Echo Return Loss
ESS	-	Electronic Switching System
ESSX	-	Electronic Switching System Exchange
f	-	frequency

ACCESS SERVICES (C)

EXPLANATION OF ABBREVIATIONS

FID	-	Field Identifier
F.C.C.	-	Federal Communications Commission
FX	-	Foreign Exchange
Hz	-	Hertz
IC	-	Interexchange Carrier
ICB	-	Individual Case Basis
ICL	-	Inserted Connection Loss
kbps	-	kilobits per second
kHz	-	kilohertz
LATA	-	Local Access and Transport Area
ma	-	milliamperes
Mbps	-	Megabits per second
MHz	-	Megahertz
MRC	-	Monthly Recurring Charge
MTS	-	Message Telecommunications Service(s)
NPA	-	Numbering Plan Area
NRC	-	Nonrecurring Charge
NTS	-	Non-Traffic Sensitive
NXX	-	Three-Digit Central Office Code
OTPL	-	Zero Transmission Level Point
PBX	-	Private Branch Exchange
PCM	-	Pulse Code Modulation
PLR	-	Private Line Ringdown
POT	-	Point of Termination
rms	-	root-mean-square
RSM	-	Remote Switching Modules
RSS	-	Remote Switching Systems
SRL	-	Singing Return Loss
SSN	-	Switched Service Network
SWC	-	Serving Wire Center
TES	-	Telephone Exchange Service(s)
TLP	-	Transmission Level Point
TSPS	-	Traffic Service Position System
USOC	-	Uniform Service Order Code
V & H	-	Vertical & Horizontal
WATS	-	Wide Area Telecommunications Service(s)

ACCESS SERVICES (C)

1. Application of Tariff

1.1 This tariff contains regulations, rates and charges applicable to Switched Access Services and other miscellaneous services, hereinafter referred to collectively as service(s), provided by the New England Telephone and Telegraph Company, hereinafter referred to as the Telephone Company, to Interexchange Carrier(s) including resellers or other entities engaged in the provision of Public Utility Common Carrier Services which utilize the network of the Telephone Company, who are certified to provide such services by the New Hampshire Public Utilities Commission. Regulations, rates and charges, specified herein will be applied covering a period which will terminate no later than the implementation of an interim tariff as approved in New Hampshire Docket No. 90-002. (C) (C)

1.2 For purposes of administering this tariff Interexchange Carriers, including resellers or other entities engaged in the provision of Public Utility Common Carrier Services which utilize the network of the Telephone Company, who are certified to provide such services by the New Hampshire Public Utilities Commission, are hereinafter referred to as ICs. (C) (C)

1.3 The provision of such services by the Telephone Company as set forth in this tariff does not constitute a joint undertaking with the IC for the furnishing of any service.

1.4 The regulations, rates and charges contained herein are in addition to the regulations, rates and charges specified in other tariffs of the Telephone Company which are referenced herein.

1.5 The operating territory of the Telephone Company for the State of New Hampshire comprises the locations set forth in Section 6 following.

ACCESS SERVICES (C)

2. General Regulations

General regulations as set forth in NYNEX F.C.C. No. 1 Section 2 for Access Services are applicable, as appropriate, for terminating-only Feature Group C and originating, terminating or two-way Feature Groups B and D Switched Access unless otherwise specified herein. (C) (C)

2.1 Obligations of the IC

2.1.1 Jurisdictional Report Requirements

(A) Jurisdictional Reports

(1) (a) When the IC orders Switched Access Service for both interstate and intrastate use, the projected interstate percentages of originating and terminating use must be provided in whole numbers to the Telephone Company.

(b)(i) For purposes of developing the projected interstate percentages, the IC shall consider every call that enters the IC's network, directly or indirectly, at a point within the same state as the state where the called station is located to be intrastate and every call that enters the IC's network, directly or indirectly, at a point in a state different from the state in which the called station is located to be interstate. (C) (C)

(ii) For purposes of developing the projected estimate of FGC terminating intrastate usage as set forth in (2)(b) following, the IC shall consider every call that enters the IC's network, directly or indirectly, at a point within the same state where the called station is located to be intrastate. (C) (C)

(c) These whole number percentages will be used by the Telephone Company to apportion the originating and terminating use, rates and/or nonrecurring charges between interstate and intrastate until a revised report is received as set forth in (4) following.

(2) (a) For Feature Groups B and D Switched Access Service, when the call detail is adequate to determine the appropriate jurisdiction, the Telephone Company will develop the projected interstate percentage for originating access minutes by dividing the measured interstate originating access minutes, by the total originating access minutes. The projected interstate percentage will be developed on a monthly basis by end office. (C)

2. General Regulations (Cont'd)

2.1 Obligations of the IC (Cont'd)

2.1.1 Jurisdictional Report Requirements (Cont'd)

(A) Jurisdictional Reports (Cont'd)

When an IC orders Switched Access Service for non 800 (C)
Access Service originating usage, the IC shall provide (C)
a projected interstate percentage of originating use for each end office involved. These percentages will be used by the Telephone Company as the projected interstate percentages in the event that originating call details are insufficient to determine the jurisdiction for the call.

When an IC orders Feature Groups B and D Switched (C)
Access Service for non 800 Access Service terminating (C)
use, the IC shall provide a projected interstate percentage of terminating use for each end office involved.

(b) In addition to the regulations in (a) preceding, when an IC orders Feature Group C which will be utilized for terminating intrastate usage, the IC shall supply a projected estimate of such intrastate terminating access minutes of use excluding those minutes which originated over Feature Group D. The IC shall provide this projected estimate of intrastate usage for each end office involved to be utilized in the event that such call details are unavailable. For purposes of developing the projected intrastate estimate, the IC shall utilize the same considerations as those set forth in (1)(b)(ii) preceding.

(c) For Feature Groups B and D Switched Access Service (N)
used for 800 Access Service, the IC will provide separate projected interstate percentages of originating and terminating 800 Access Service use for each end office. (N)

ACCESS SERVICES (C)

2. General Regulations (Cont'd)

2.1 Obligations of the IC (Cont'd)

2.1.1 Jurisdictional Report Requirements (Cont'd)

(A) Jurisdictional Reports (Cont'd)

(2) (Cont'd)

(d) The Telephone Company will designate the numbers obtained by subtracting the projected interstate percentage for originating access minutes and the projected interstate percentage for terminating access minutes from 100 as the projected intrastate percentages of use (e.g., 100 - projected interstate percentages of originating use = intrastate percentage of originating use). (T)

(3) The projected interstate percentages of use and intrastate percentages of use as set forth in (1) preceding will be used to determine the charges as follows:

(a) The number of originating access minutes for a group will be multiplied by the projected interstate percentage of originating use to determine the originating interstate access minutes. The number of originating interstate access minutes so determined will be subtracted from the total number of originating access minutes for the group to determine the originating intrastate access minutes.

(b) The number of terminating access minutes for a group will be multiplied by the projected interstate percentage of terminating use to determine the terminating interstate access minutes. The number of terminating interstate access minutes as determined will be subtracted from the total number of terminating access minutes for the group to determine the terminating intrastate access minutes.

2. General Regulations (Cont'd)

2.1 Obligations of the IC (Cont'd)

2.1.1 Jurisdictional Report Requirements (Cont'd)

(A) Jurisdictional Reports (Cont'd)

(4) Effective on the first of January, April, July and October of each year the IC may update the jurisdictional report. For purposes of implementation, the IC must update the (C) jurisdictional report in conjunction with the effective date of this tariff to reflect the originating and terminating percentages of use for the ensuing period. (C) The IC shall forward to the Telephone Company, to be received no later than 20 calendar days after the first of each such month, a revised report showing the interstate percentages of originating and terminating use and for Feature Group C the actual or estimated terminating intrastate usage for the past three months ending the last day of December, March, June and September, respectively, for each originating service and/or terminating service arranged for interstate and intrastate use. A separate revised update is required in the event the IC has outstanding orders for Feature Groups B and D Service in order to reflect any changes in (C) the quarterly percentage of interstate use prior to actual completion. Except as set forth in (2) preceding where jurisdiction can be determined from the call detail, the revised report will serve as the basis for the next three months billing and will be effective on the bill date in the following month (i.e., February, May, August and November) for that service. No prorating or back billing will be done based on the report. If the IC does not supply the report, other than the initial (C) report, the Telephone Company will assume the percentages (C) for originating and terminating use and/or terminating intrastate usage information to be the same as that provided in the last quarterly report. For those cases in which a quarterly report has never been received from the IC, the Telephone Company will assume the percentages for originating and terminating use and/or terminating intrastate usage information to be the same as that provided in the order for service as set forth in (1) and (2) preceding.

(5) The IC reported projected interstate percentages of use as set forth in (2)(a) preceding will be used for the apportionment of rates or nonrecurring charges associated with Feature Groups B and D Switched Access Service until (C) the end of the quarter during which the service was activated. The IC reported estimate of terminating intrastate use as set forth in (2)(b) preceding will be used to bill such rates associated with intrastate Feature Group C. Thereafter, the projected interstate percentages

ACCESS SERVICES (C)

2. General Regulations (Cont'd)

2.1 Obligations of the IC (Cont'd)

2.1.1 Jurisdictional Report Requirements (Cont'd)

(A) Jurisdictional Reports (Cont'd)

(5) (Cont'd)

for such apportionment and a projected estimate of terminating intrastate use for such billing will be developed quarterly by the Telephone Company based on the data used to develop the projected interstate percentages of use and the projected estimate of terminating use as set forth in (2) preceding. Where call detail is insufficient to make such a determination, the IC reported projected interstate percentages of use and the projected estimate of terminating use as set forth in (4) preceding will be used by the Telephone Company for such apportionment.

(6) For Feature Groups B and D Switched Access Service, the IC reported projected interstate percentages of use will be used for the apportionment of nonrecurring charges until the end of the quarter during which the service was activated as follows: (C)

(i) the projected interstate percentage of originating use will be used to determine the apportionment of charges for originating trunks.

(ii) the projected interstate percentage of terminating use will be used to determine the apportionment of charges for terminating trunks.

(iii) the average of the projected interstate percentage of originating use and the projected interstate percentage of terminating use will be used to determine the apportionment of charges for two-way lines or trunks (i.e., originating percentage interstate use + terminating percentage interstate use divided by 2 = average percent of interstate use for two-way trunks).

2. General Regulations (Cont'd)

2.1 Obligations of the IC (Cont'd)

2.1.1 Jurisdictional Report Requirements (Cont'd)

(B) The IC shall keep sufficient detail from which the percentages of interstate use for Feature Groups B and D, 800 Access (C) Service and terminating intrastate use for Feature Group C (C) can be ascertained and upon request of the Telephone Company make the records available for inspection. Such a request will be initiated by the Telephone Company no more than once per year. The IC shall supply the data within 30 calendar days of the Telephone Company request.

2.1.2 Determination of Intrastate Charges for Mixed Interstate and Intrastate Access Service

When mixed interstate and intrastate Access Service is provided, all charges (i.e., nonrecurring, monthly and/or usage), will be prorated between interstate and intrastate. The percentages and intrastate terminating usage for Feature Group C as set forth in 2.1.1(A) preceding will serve as the basis for calculating the charges. The percentages of an Access Service to be charged as intrastate are applied in the following manner:

(A) For monthly and/or usage and nonrecurring chargeable rate elements associated with Access Services other than intrastate terminating Feature Group C multiply the intrastate percent times the quantity of chargeable elements times the state tariff rate per element.

ACCESS SERVICES (C)

2. General Regulations (Cont'd)

2.1 Obligations of the IC (Cont'd)

2.1.2 Determination of Intrastate Charges for Mixed Interstate and Intrastate Access Service (Cont'd)

(B) For usage sensitive (i.e., access minutes) chargeable rate elements, charges are calculated as follows:

(1) multiply the percent intrastate use times actual use (i.e., measured, Telephone Company assumed average use) times the state tariff rate, and

(2) multiply the estimated or actual terminating use for intrastate FGC times the state tariff rate and add this amount to the product obtained in (1) preceding. (T) (T)

The intrastate percentage and terminating intrastate use for FGC will change as revised usage reports are submitted or a revised percentage and/or revised FGC terminating intrastate usage are calculated as set forth in 2.1.1 preceding.

2.1.3 Report Requirements When More Than One Exchange Telephone Company is Involved

In addition to furnishing the jurisdictional reports specified in 2.1.1 and 2.1.2 preceding, when service(s) is provided where one end of the Local Transport element is in the Telephone Company operating territory and the other end is in another Exchange Telephone Company operating territory, the IC shall provide on the first business day of each calendar month a record of usage data and the other Exchange Telephone Company associated with it. This information will be used to calculate billing as set forth in NYNEX F.C.C. No. 1, Section 2.4.7. (C)

ACCESS SERVICES (C)

3. Ordering Provisions for Switched Access Service

Regulations, rates and charges for ordering provisions applicable to Switched Access Service under this tariff are the same as those set forth in NYNEX F.C.C. No. 1 Section 5 for terminating-only Feature Group C and (C)
originating, terminating or two-way Feature Groups B and D. (C)

ACCESS SERVICES (C)

4. Switched Access Service

The Switched Access Services provided under the rates and regulations in this tariff are for (a) terminating-only Feature Group C; (b) terminating 800 Access Service when such service is ordered and provisioned out of NYNEX F.C.C. No. 1 and (c) originating, terminating or two-way Feature Groups B and D. The access code for originating non-800 Feature Group D switching is a uniform access code of the form 10XXX. Regulations for these services are the same as the regulations set forth in NYNEX F.C.C. No. 1, as applicable, unless otherwise specified herein. (C) (C) (C)

4.1 General

4.1.1 Rate Elements

There are two rate elements which apply to Switched Access Service:

- Local Switching (described in 4.1.1(A) following)

- Local Transport (for terminating-only Feature Group C and originating, terminating or two-way Feature Groups B and D described in NYNEX F.C.C. No. 1 Section 6.1.3(A)). (C) (C)

4. Switched Access Service (Cont'd)

4.1 General (Cont'd)

4.1.1 Rate Elements (Cont'd)

The following diagram depicts a generic view of the components of Switched Access Service and the manner in which the components are combined to provide a complete Access Service:

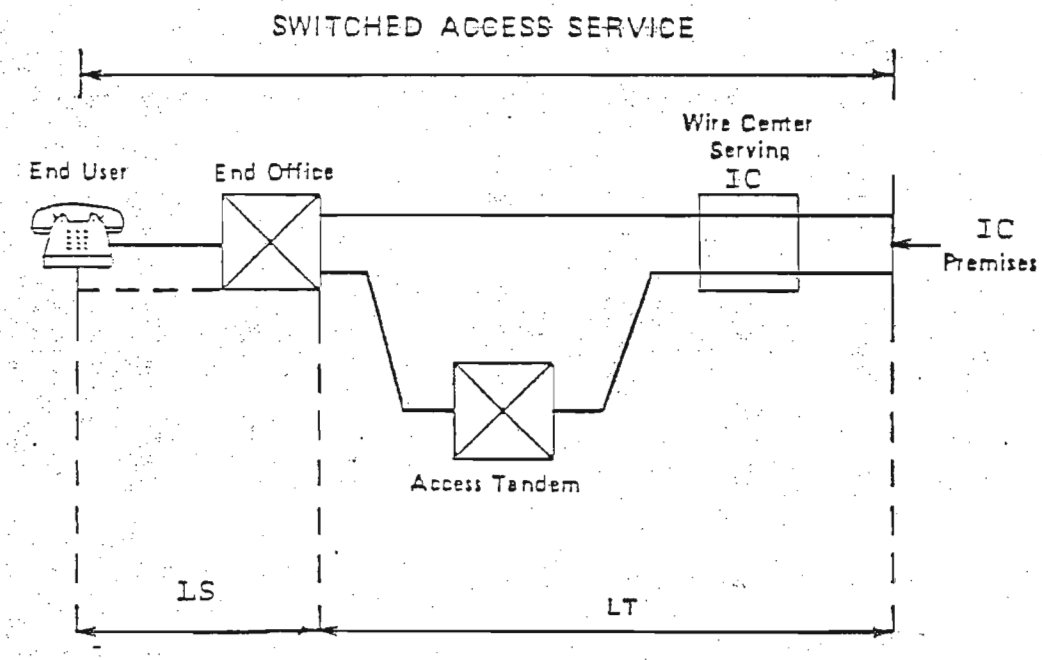

LS - Local Switching
LT - Local Transport

ACCESS SERVICES (C)

4. Switched Access Service (Cont'd)

4.1 General (Cont'd)

4.1.1 Rate Elements (Cont'd)

(A) Local Switching

The Local Switching rate element provides for the use of common lines and the local end office switching and end user termination functions necessary to complete the transmission of Switched Access communications to the end users served by the local end office. The Local Switching rate element includes the Local Access, Line Termination, and Intercept functions.

(1) Local Access

The Local Access function provides for the use of end office switching equipment.

There are two types of Local Access functions, i.e., Common Switching functions and Transport Termination functions. These are described in (a) and (b) following.

(a) Common Switching

Common Switching provides the local end office switching functions associated with the various access (i.e., Feature Group) switching arrangements. The Common Switching arrangements provided for terminating-only Feature Group C and originating, terminating or two-way Feature Groups B and D are (C)
described in NYNEX F.C.C. No. 1 Section 6.2. (C)

Included as part of Common Switching are various optional features which the IC can order to meet the IC's specific communications requirements. These optional features are described in NYNEX F.C.C. No. 1 (C)
Section 6.3.1 for terminating-only Feature Group C and originating, terminating or two-way Feature Groups B (C)
and D. (C)

ACCESS SERVICES (C)

4. Switched Access Service (Cont'd)

4.1 General (Cont'd)

4.1.1 Rate Elements (Cont'd)

(A) Local Switching (Cont'd)

(b) Transport Termination

Transport Termination provides for the line or trunk side arrangements which terminate the Local Transport facilities. Included as part of Transport Termination are various nonchargeable optional termination arrangements. These optional terminating arrangements are described in NYNEX F.C.C. No. 1 (C)
Section 6.3.2 for terminating-only Feature Group C (C)
and originating, terminating or two-way Feature Groups (C)
B and D. (C)

The number of Transport Terminations provided will be determined by the Telephone Company as set forth in NYNEX F.C.C. No. 1 Section 6.5.6. (C)

(2) Line Termination

The Line Termination function provides the terminations for the end user lines terminating in the local end office.

(3) Intercept

The Intercept function provides for the termination of a call at a Telephone Company Intercept operator or recording. The operator or recording tells a caller why a call, as dialed, could not be completed, and if possible, provides the correct number.

4.2 Rate Regulations

4.2.1 Description and Application of Rates and Charges

(A) Application of Rates

(1) Local Switching and Local Transport rates are applied to all minutes of use measured as specified in 4.2.2 following. (T)

(2) As specified in the Commission's Order No. 20,077, Switched Access originating and/or terminating charges apply to all intrastate messages subject to this tariff. (N) (N)

ACCESS SERVICES (C)

4. Switched Access Service (Cont'd)

4.2 Rate Regulations (Cont'd)

4.2.2 Measuring Access Minutes

Regulations for measuring access minutes for originating, terminating or two-way Feature Groups B and D are the same as (C) those set forth in NYNEX F.C.C. No. 1 Section 6.7.6. For calls (C) terminating over Feature Group C, the estimated and/or actual minutes are the chargeable access minutes.

4.3 Rates and Charges

4.3.1 Local Switching

	Rate Per Access Minute
Originating For All Offered Feature Groups	$0.0753
Terminating For All Offered Feature Groups	0.0734

4.3.2 Local Transport
For all offered Feature Groups

(A) Rates

	Local Transport Termination	Local Transport Facility	
- Per Access Minute	$0.0115		
- Per Mile, Per Access Minute		$0.000653	(C)

(B) Nonrecurring Charge

The nonrecurring charge for installation of a trunk is as specified in NYNEX F.C.C. No. 1 Section 30.6.1(C). (C)

ACCESS SERVICES (C)

5. Additional Engineering, Additional Labor and Miscellaneous Services

Regulations and charges for additional engineering, additional labor and miscellaneous services applicable to Switched Access Service provided under the regulations and rates in this tariff are the same as those set forth in NYNEX F.C.C. No. 1 Section 13 for terminating-only Feature Group C (C) and originating, terminating or two-way Feature Groups B and D. (C)

ACCESS SERVICES (C)

6. Operating Territory

6.1 The operating territory of the Telephone Company for New Hampshire comprises the following locations, defined by the names of rate centers:

Alstead
Ashland
Barrington
Bartlett
Bedford
Belmont
Berlin
Bethlehem
Bristol
Campton
Canaan
Candia
Canterbury
Center Harbor
Center Ossipee
Center Sandwich
Charlestown
Claremont
Colebrook
Concord
Conway
Danbury
Deerfield
Derry
Dover
Dublin
Durham
Enfield
Epping
Epsom
Errol
Exeter
Farmington
Fitzwilliam
Franconia
Franklin
Goffstown
Gorham
Greenfield
Greenville
Groveton
Hampstead
Hampton
Hancock
Hanover
Harrisville
Hinsdale
Jackson
Jaffrey
Jefferson
Keene
Kingston
Laconia
Lancaster
Lebanon
Lisbon
Littleton
Lyme
Madison
Manchester
Marlborough
Marlow
Meredith
Merrimack
Milan
Milford
Milton
Milton Mills
Monroe
Nashua
New Boston
New market
Newport
N. Conway
N. Stratford
N. Walpole
Northwood
N. Woodstock
Orford
Pelham
Penacook
Peterborough
Piermont
Pike
Pittsburg
Pittsfield
Plainfield
Plaistow
Plymouth
Portsmouth
Raymond
Rindge
Rochester
Rumney
Rye Beach
Salem
Sanbornville
Seabrook
Somersworth
S. Hampton
Spofford
Sullivan
Sunapee
Suncook
Tamworth
Tilton
Troy
Twin Mountain
Walpole
Warren
W. Chesterfield
W. Lebanon
Westmoreland
W. Stewartstown
Whitefield
Winchester
Wolfeboro
Woodsville

0060

ATTACHMENT
ITEM One Comm (-Ke)
VZ # 84

New England Telephone
A NYNEX Company
900 Elm Street, Floor 19
Manchester, New Hampshire 03101-2008
Phone (603) 641-1660
Fax (603) 641-1678

R E C E I P T

Michael J. McCluskey
Vice President - NH

August 16, 1993

State of New Hampshire
Public Utilities Commission
8 Old Suncook Road
Concord, NH 03301

Commissioners:

We are filing herewith in compliance with NHPUC Order No. 20,916 in Docket #DE 90-002, dated August 2, 1993 the following tariff pages for effect October 1, 1993.

NHPUC - No. 75
Part A - Section 1 - Sixth Revision of Page 3

NHPUC - No. 78

Cover Sheet	
Master Table of Contents	
Table of Contents	- Third Revision of Page 1
Table of Contents	- Original Pages 2 through 7
Tariff Information	- Fifth Revision of Page 1
Tariff Information	- Third Revision of Page 2 and 3
Section 1	- Third Revision of Page 1
Section 2	- Fourth Revision of Page 1
	- Third Revision of Pages 2 and 3
	- Fourth Revision of Pages 4, 5, and 6
	- Third Revision of Page 7
	- Original Pages 8 through 52
Section 3	- Fourth Revision of Page 1
	- Original Pages 2 through 9
Section 4	- Fourth Revision of Page 1
	- Third Revision of Page 2
	- Fourth Revision of Pages 3, 4, and 5
Section 5	- Fourth Revision of Page 1
Section 6	- Third Revision of Page 1
	- Original Pages 2 through 26
Section 7	- Original Page 1
Section 8	- Original Page 1
Section 9	- Original Page 1
Section 10	- Original Page 1
Section 11	- Original Pages 1 and 2
Section 12	- Original Pages 1 and 2
Section 13	- Original Pages 1 and 2
Section 14	- Original Page 1
Section 15	- Original Page 1

RECEIVED
AUG 16 1993
N.H. PUBLIC UTILITIES COMMISSION

This filing is the first of a four-step, phase-down schedule to reduce NET's present switched access charges. In addition, this filing specifies that intrastate access services are available to carriers certified as public utilities and authorized by the New Hampshire Public Utilities Commission to provide interexchange services within New Hampshire. Since equal access is now in place throughout New Hampshire, Feature Group C will be eliminated to all but Independent Telephone Company end offices. Other revisions to the access tariff include more stringent jurisdictional reporting requirements, provisions for auditing IXC reported PIU (percent interstate use) data and other terms and conditions consistent with the interstate tariff which are required to convert the limited application of the present tariff to a more comprehensive tariff applicable to the competitive New Hampshire toll market.

Tariff NHPUC - No. 75 is revised to specify that carriers and resellers must purchase access services for the use of NET's exchange network and facilities in the provision of their services and will continue the prohibition on resale of basic exchange and foreign exchange services.

The estimated revenue effect of these revisions is an annual reduction of approximately $1.37 million in intrastate access charge revenues.

Please return the copies of the pages marked "Duplicate" with your stamp of receipt.

Respectfully submitted,
NEW ENGLAND TELEPHONE AND TELEGRAPH COMPANY

Michael J. McCluskey

Michael J. McCluskey
1847r/2

GENERAL REGULATIONS AND DEFINITIONS

1.2. ESTABLISHING AND FURNISHING SERVICE (Continued)

1.2.2. RESPONSIBILITY OF THE CUSTOMER (Continued)

E. The customer is responsible for payment of all charges for service as follows:

1. Bills are due when rendered and are payable at an office of the Telephone Company or its authorized agents. Delayed payment of bills for existing service may result in the interruption or discontinuance of all associated service at the same location and within the same classification.

2. The customer is required to pay, in accordance with the Telephone Company's established collection and billing practice, all charges for exchange, end user access, and private line services; Message Telecommunications Service (MTS) messages, including charges for messenger service; and for all services billed by the Company for other carriers. The customer is held responsible for all charges for telephone service rendered at the customer's telephone, including charges for MTS messages on which the charges have been made collect.

3. In order to safeguard it against loss of charges or tolls due at the time service may be terminated, the Telephone Company may require a customer or applicant for telephone service to make a cash deposit equal to the estimated amount of charges for service to be billed, for any period of two months. The rate of interest for customer deposits is set by the Public Utilities Commission in accordance with Rule 403.04 (b)(2) of the Public Utilities Commission's Code of Administrative Rules. Simple interest is credited to the customer annually or upon termination of the service or the return of the deposit by the Telephone Company. The receipt of such a deposit by the Telephone Company in no way relieves the customer or applicant from compliance with the Telephone Company's regulations as to advance payments (if any) and the prompt payment of bills, nor does it constitute a waiver or modification of the practices of the Telephone Company for the discontinuance of service for non-payment of any sums due for service rendered.

4. Whenever a check or draft presented for payment of service is not accepted by the institution on which it is written, a $5.00 charge applies per check or draft returned.

1.2.3. USE OF SERVICE

A. Except as provided in Section 8 for Public Access Line Service, and in Section 6 for Call Forwarding II Custom Calling Service, service shall not be used in competition with the business of the Telephone Company. Interexchange Toll Service Providers (other than a LEC Toll Provider using its own network) must purchase service from NHPUC - 78 for the conveyance of such interexchange service(s) when using LEC facilities or purchasing LEC services to originate or terminate its intrastate toll traffic. (C)

B. Service is furnished subject to the condition that it will not be used for an unlawful purpose. Service will not be furnished if any law enforcement agency, acting within its jurisdiction, advises that such service is being used or will be used in violation of law. If the Telephone Company receives other evidence that such service is being or will be so used, it will either discontinue or deny the service or refer the matter to the appropriate law enforcement agency.

NEW ENGLAND TELEPHONE AND TELEGRAPH COMPANY

RATES AND CHARGES

EFFECTIVE IN
THE STATE OF
NEW HAMPSHIRE

NEW ENGLAND TELEPHONE AND TELEGRAPH COMPANY

MASTER TABLE OF CONTENTS

NHPUC - No. 78

ACCESS SERVICES

TARIFF INFORMATION

Section 1 - Application of Tariff
Section 2 - General Regulations
Section 3 - Carrier Common Line Access Service
Section 4 - Reserved For Future Use
Section 5 - Ordering Provisions for Switched Access Service
Section 6 - Switched Access Service
Section 7 - Reserved For Future Use
Section 8 - Reserved For Future Use
Section 9 - Reserved For Future Use
Section 10 - Reserved For Future Use
Section 11 - Special Facilities Routing of Access Services
Section 12 - Specialized Services or Arrangements
Section 13 - Additional Engineering, Additional Labor and Miscellaneous Services
Section 14 - Reserved for Future Use
Section 15 - Operating Territory

Dated: August 16, 1993

Michael J. McCluskey
Vice President - New Hampshire

Authorized by NHPUC Order No. 20,916, in DE 90-002, dated August 2, 1993.

ACCESS SERVICES

		Page No.	
TARIFF INFORMATION			(T)
	CONCURRING/CONNECTING AND/OR OTHER PARTICIPATING CARRIERS	1	
	EXPLANATION OF SYMBOLS	2	
	EXPLANATION OF ABBREVIATIONS	2	
	REFERENCE TO OTHER TARIFFS	2	
	REFERENCE TO OTHER PUBLICATIONS	2	
1.	APPLICATION OF TARIFF	1	
2.	GENERAL REGULATIONS	1	
2.1	Undertaking of the Telephone Company	1	
2.1.1	Scope	1	
2.1.2	Limitations	1	
2.1.3	Liability	2	
2.1.4	Provision of Services	5	
2.1.5	Installation and Termination of Services	5	
2.1.6	Maintenance of Services	5	
2.1.7	Changes and Substitutions	5	
2.1.8	Refusal and Discontinuance of Service	6	
2.1.9	Limitation of Use of Metallic Facilities	7	
2.1.10	Notification of Service-Affecting Activities	7	
2.1.11	Coordination with Respect to Network Contingencies	8	
2.1.12	Provision and Ownership of Telephone Numbers	8	
2.2	Use	8	
2.2.1	General	8	
2.2.2	Interference or Impairment	8	
2.2.3	Unlawful Use	9	
2.3	Obligations of the Customer	9	
2.3.1	Damages	9	
2.3.2	Ownership of Facilities and Theft	10	
2.3.3	Equipment Space and Power	10	
2.3.4	Availability for Testing	10	
2.3.5	Balance	10	
2.3.6	Design of Customer Services	10	
2.3.7	References to the Telephone Company	11	
2.3.8	Claims and Demands for Damages	11	
2.3.9	Coordination with Respect to Network Contingencies	12	(T)

ACCESS SERVICES

Page No.

2. GENERAL REGULATIONS (Continued)

2.1 Obligations of the Customer (Continued)

2.3.10 Jurisdictional Report Requirements 13
2.3.11 Determination of Intrastate Charges for Mixed Interstate and Intrastate Access Service 18
2.3.12 Report Requirements When More Than One Exchange Telephone Company is Involved 19

2.4 Payment Arrangements and Credit Allowances 20

2.4.1 Payment of Rates, Charges and Deposits 20
2.4.2 Minimum Periods 27
2.4.3 Cancellation of an Order for Service 27
2.4.4 Credit Allowance for Service Interruptions 27
2.4.5 Re-establishment of Service Following Fire, Flood or Other Occurrence 29
2.4.6 Title or Ownership Rights 30
2.4.7 Ordering, Rating and Billing of Access Services Where More Than One Exchange Telephone Company Is Involved 31

2.5 Connections 37

2.6 Definitions 37

Access Code 37
Access Minutes 37
Access Tandem 37
Answer/Disconnect Supervision 38
Attenuation Distortion 38
Bit 38
Business Day 38
Busy Hour Minutes of Capacity 38
Call 39
Carrier or Common Carrier 39
CCS 39
Central Office 39
Central Office Prefix 39
Channel(s) 39
Channelize 39

ACCESS SERVICES

Page No.

2. GENERAL REGULATIONS (Continued)

2.6 Definitions (Continued)

Coin Station	40
Common Line	40
Communications System	40
Conversation Minutes	40
Customer(s)	40
Decibel	41
Decibel Reference Noise C-Message Weighting	41
Decibel Reference Noise C-Message Referenced to 0	41
Detail Billing	41
Directory Assistance	41
Echo Path Loss	41
Echo Return Loss	42
Effective 2-Wire	42
Effective 4-Wire	42
End Office Switch	42
End User	43
Entry Switch	43
Equal Level Echo Path Loss	43
Expected Measured Loss	43
Exchange	43
Field Identifier	43
First Come - First Served	44
First Point of Switching	44
Frequency Shift	44
Grandfathered	44
Host Office	44
Immediately Available Funds	44
Impedance Balance	45
Individual Case Basis	45
Inserted Connection Loss	45
Interexchange Carrier (IC) or Interexchange Common Carrier	45
Interstate Communications	46
Intrastate Communications	46
Legal Holiday	46
Line Side Connection	46
Local Access and Transport Area	46
Local Calling Area	46
Local Tandem Switch	46

ACCESS SERVICES

Page No.

2. GENERAL REGULATIONS (Continued)

2.6 Definitions (Continued)

Loss Deviation	47
Major Fraction Thereof	47
Message	47
Network Control Signaling	47
North American Numbering Plan	48
Off-Hook	48
On-Hook	48
Operator Services Provider	48
Originating Direction	48
Pay Telephone	48
Point of Termination	49
Premises	49
Remote Switching Modules and/or Remote Switching Systems	49
Return Loss	49
Service Access Code	50
Singing Return Loss	50
Subtending End Office of an Access Tandem	50
Switching Systems	50
Terminating Direction	51
Traffic Type	51
Transmission Path	51
Trunk	51
Trunk Group	51
Trunk-Side Connection	52
Two-Wire to Four-Wire Conversion	52
Uniform Service Order Code (USOC)	52
V&H Coordinates Method	52
WATS Serving Office	52
Wire Center	52

ACCESS SERVICES

		Page No.
3.	CARRIER COMMON LINE ACCESS SERVICE	1
3.1	Limitations	1
3.1.1	Exclusions	1
3.1.2	Access Groups	1
3.1.3	WATS Access Lines	1
3.2	Undertaking of the Telephone Company	2
3.2.1	Provision of Service	2
3.2.2	Interstate and Intrastate Use	2
3.3	Obligations of the Customer	2
3.3.1	Switched Access Service Requirement	2
3.3.2	Supervision	2
3.4	Determination of Usage Subject to Carrier Common Line Access Charges	3
3.4.1	Determination of Jurisdiction	3
3.4.2	Local Exchange Access and Enhanced Services Exemption	3
3.5	Resold Services	3
3.5.1	Scope	3
3.6	Coin Services	4
3.6.1	Collection and Remittance of Coin Station Monies	4
3.6.2	Provision of Message Call Detail Concerning Station Monies	4
3.6.3	Payment of Coin Sent-Paid Monies	4
3.7	Rate Regulations	7
3.7.1	Billing of Charges	7
3.7.2	Measuring and Recording of Call Detail	7
3.7.3	Unmeasured Feature Group B Usage	7
3.7.4	Percent Interstate Use	7
3.7.5	Determination of Charges	8
3.8	Rates and Charges	9

ACCESS SERVICES

		Page No.
4.	RESERVED FOR FUTURE USE	1
5.	ORDERING PROVISIONS FOR SWITCHED ACCESS SERVICE	1
6.	SWITCHED ACCESS SERVICE	1
6.1	General	1
6.1.1	Rate Categories	1
6.1.2	Special Facilities Routing	6
6.1.3	Design Layout Report	7
6.1.4	Acceptance Testing	7
6.1.5	Ordering Options and Conditions	7
6.2	Provision and Description of Switched Access Feature Groups	7
6.3	Local Switching Optional Features	7
6.3.1	Common Switching	8
6.3.2	Transport Termination	14
6.3.3	WATS Access Line Service Termination	14
6.4	Transmission Specifications	15
6.5	Obligations of the Telephone Company	15
6.6	Obligations of the Customer	15
6.6.1	Reports Requirements	15
6.6.2	Supervisory Signaling	15
6.6.3	Trunk Group Measurement Reports	16
6.6.4	Design of Switched Access Services	16
6.7	Rate Regulations	17
6.7.1	Description and Application of Rates and Charges	17
6.7.2	Minimum Periods	21
6.7.3	Reserved For Future Use	21
6.7.4	Change of Switched Access Service Arrangement Type	21
6.7.5	Moves	22
6.7.6	Measuring Access Minutes	22
6.7.7	Network Blocking Charge for Feature Group D	22
6.7.8	Reserved For Future Use	23
6.7.9	Reserved For Future Use	23
6.7.10	Reserved For Future Use	23
6.7.11	Mileage Measurement	23

ACCESS SERVICES

		Page No.
6.	SWITCHED ACCESS SERVICE (Continued)	
	6.8 Rates and Charges	24
	6.8.1 Local Transport	24
	6.8.2 Local Switching	26
	6.8.3 800 Access Service	26
7.	RESERVED FOR FUTURE USE	1
8.	RESERVED FOR FUTURE USE	1
9.	RESERVED FOR FUTURE USE	1
10.	RESERVED FOR FUTURE USE	1
11.	SPECIAL FACILITIES ROUTING OF ACCESS SERVICES	1
	11.1 Description of Special Facilities Routing of Access Services	1
	11.1.1 Diversity	1
	11.1.2 Avoidance	1
	11.1.3 Cable-Only Facilities	1
	11.2 Rates and Charges for Special Facilities Routing of Access Service	2
	11.2.1 Diversity	2
	11.2.2 Avoidance	2
	11.2.3 Diversity and Avoidance Combined	2
	11.2.4 Cable-Only Facilities	2
12.	SPECIALIZED SERVICE OR ARRANGEMENTS	1
	12.1 General	1
	12.2 Move Charges	1
	12.3 Rates and Charges	2
13.	ADDITIONAL ENGINEERING, ADDITIONAL LABOR AND MISCELLANEOUS SERVICES	1
	13.1 Rates and Charges	2
14.	RESERVED FOR FUTURE USE	1
	OPERATING TERRITORY	1

ACCESS SERVICES

CONCURRING CARRIERS

NO CONCURRING CARRIERS

CONNECTING CARRIERS

NO CONNECTING CARRIERS

OTHER PARTICIPATING CARRIERS

NO OTHER PARTICIPATING CARRIERS

REGISTERED SERVICE MARKS	REGISTERED TRADEMARKS
NONE	NONE

ACCESS SERVICES

EXPLANATION OF SYMBOLS

(C) - To signify changed regulation
(D) - To signify discontinued rate or regulation
(I) - To signify increase
(N) - To signify new rate or regulation
(R) - To signify reduction
(S) - To signify the incorporation of material previously effective on a supplement
(T) - To signify a change in text but no change in rate or regulation
(X) - To signify matter relocated without a change (C)

EXPLANATION OF ABBREVIATIONS

ac	-	Alternating current	(T)
ANI	-	Automatic Number Identification	
BHMC	-	Busy Hour Minutes of Capacity	
CO	-	Central Office	
dB	-	decibel	
dc	-	direct current	
ELEPL	-	Equal Level Echo Path Loss	
EPL	-	Echo Path Loss	
f	-	frequency	
FID	-	Field Identifier	
F.C.C.	-	Federal Communications Commission	
Hz	-	Hertz	
IC	-	Interexchange Carrier	
ICB	-	Individual Case Basis	
LATA	-	Local Access and Transport Area	
MTS	-	Message Telecommunications Service(s)	
NPA	-	Numbering Plan Area	
NXX	-	Three-Digit Central Office Code	
TSPS	-	Traffic Service Position System	
USOC	-	Uniform Service Order Code	
V & H	-	Vertical & Horizontal	
WATS	-	Wide Area Telecommunications Service(s)	(T)

REFERENCE TO OTHER TARIFFS

Whenever reference is made in this tariff to other tariffs of the Telephone Company, the reference is to the tariffs in force as of the effective date of this tariff, and to amendments thereto and successive issues thereof. (N)

REFERENCE TO OTHER PUBLICATIONS

erence to publications, (technical or otherwise), may be made in this riff. Such publications may be obtained from the sources specified in NYNEX Tariff F.C.C. No. 1. (N)

ACCESS SERVICES

Material previously on this page now appears on page 2.

1. Application of Tariff

1.1 This tariff contains regulations, rates and charges applicable to Switched Access Services and other miscellaneous services, hereinafter referred to collectively as service(s), provided by the New England Telephone and Telegraph Company, hereinafter referred to as the Telephone Company, to Interexchange Carrier(s) including resellers or other entities engaged in the provision of Public Utility Common Carrier Services which utilize the network of the Telephone Company, who are certified to provide such services by the New Hampshire Public Utilities Commission. (D)
(D)

1.2 For purposes of administering this tariff Interexchange Carriers, including resellers or other entities engaged in the provision of Public Utility Common Carrier Services which utilize the network of the Telephone Company, who are certified to provide such services by the New Hampshire Public Utilities Commission, are hereinafter referred to as Customers. (T)

1.3 The provision of such services by the Telephone Company as set forth in this tariff does not constitute a joint undertaking with the Customer for the furnishing of any service. (T)

The regulations, rates and charges contained herein are in addition to the regulations, rates and charges specified in other tariffs of the Telephone Company which are referenced herein.

1.5 The operating territory of the Telephone Company for the State of New Hampshire is comprised of the locations set forth in Section 15.

2. General Regulations

2.1 Undertaking of the Telephone Company (N)

2.1.1 Scope

(A) The Telephone Company does not undertake to transmit messages under this tariff.

(B) The Telephone Company shall be responsible only for the installation, operation and maintenance of the services it provides.

(C) The Telephone Company will, for maintenance purposes, test its services only to the extent necessary to detect and/or clear troubles.

(D) Services are provided 24 hours daily, seven days per week, except as set forth in other applicable sections of this tariff.

(E) The Telephone Company does not warrant that its facilities and services meet standards other than those set forth in this tariff.

2.1.2 Limitations

(A) The customer may not assign or transfer the use of services provided under this tariff; however, where there is no interruption of use or relocation of the services, such assignment or transfer may be made to:

(1) another customer, whether an individual, partnership, association or corporation, provided the assignee or transferee assumes all outstanding indebtedness for such services, and the unexpired portion of the minimum period and the termination liability applicable to such services, if any; or

(2) a court-appointed receiver, trustee or other person acting pursuant to law in bankruptcy, receivership, reorganization, insolvency, liquidation or other similar proceedings, provided the assignee or transferee assumes the unexpired portion of the minimum period and the termination liability applicable to such services, if any. (N)

2. General Regulations (Cont'd)

2.1 Undertaking of the Telephone Company (Cont'd) (N)

2.1.2 Limitations (Cont'd)

In all cases of assignment or transfer, the written acknowledgment of the Telephone Company is required prior to such assignment or transfer which acknowledgement shall be made within 15 days from the receipt of notification. All regulations and conditions contained in this tariff shall apply to such assignee or transferee.

The assignment or transfer of services does not relieve or discharge the assignor or transferor from remaining jointly or severally liable with the assignee or transferee for any obligations existing at the time of the assignment or transfer.

(B) The use, installation and restoration of services shall be in accordance with Part 64.401, Appendix A, of the Federal Communications Commission's Rules and Regulations, which specifies the priority system for such activities.

(C) Subject to compliance with the rules mentioned in (B) preceding, where a shortage of facilities or equipment exists at any time, either for temporary or protracted periods, the services offered herein will be provided to customers on a first-come, first-served basis.

2.1.3 Liability

(A) The Telephone Company's liability, if any, for its willful misconduct is not limited by this tariff. With respect to any other claim or suit, by a customer or by any others, for damages associated with the installation, provision, termination, maintenance, repair or restoration of service, and subject to the provisions of (B) through (G) following, the Telephone Company's liability, if any, shall not exceed an amount equal to the proportionate charge for the service for the period during which the service was affected. This liability for damages shall be in addition to any amounts that may otherwise be due the customer under this tariff as a Credit Allowance for a Service Interruption. (N)

2. General Regulations (Cont'd)

2.1 Undertaking of the Telephone Company (Cont'd) (N)

2.1.3 Liability (Cont'd)

(B) The Telephone Company shall not be liable for any act or omission of any other carrier or customer providing a portion of a service, nor shall the Telephone Company for its own act or omission hold liable any other carrier or customer providing a portion of a service.

(C) The Telephone Company is not liable for damages to the customer's premises resulting from the furnishing of a service, including the installation and removal of equipment and associated wiring, unless the damage is caused by the Telephone Company's negligence.

(D) The Telephone Company shall be indemnified, defended and held harmless by the end user against any claim, loss or damage arising from the end user's use of services offered under this tariff, involving:

(1) Claims for libel, slander, invasion of privacy, or infringement of copyright arising from the end user's own communications;

(2) Claims for patent infringement arising from the end user's acts combining or using the service furnished by the Telephone Company in connection with facilities or equipment furnished by the end user or Customer or;

(3) All other claims arising out of any act or omission of the end user in the course of using services provided pursuant to this tariff.

(E) The Telephone Company shall be indemnified, defended and held harmless by the Customer against any claim, loss or damage arising from the customer's use of services offered under this tariff, involving:

(1) Claims for libel, slander, invasion of privacy, or infringement of copyright arising from the customer's own communications; (N)

2. General Regulations (Cont'd)

2.1 Undertaking of the Telephone Company (Cont'd) (N)

2.1.3 Liability (Cont'd)

(E) (Cont'd)

(2) Claims for patent infringement arising from the customer's acts combining or using the service furnished by the Telephone Company in connection with facilities or equipment furnished by the customer or the end user.

(3) All other claims arising out of any act or omission of the customer in the course of using services provided pursuant to this tariff.

(F) The Telephone Company does not guarantee or make any warranty with respect to its services when used in an explosive atmosphere. The Telephone Company shall be indemnified, defended and held harmless by the customer from any and all claims by any person relating to the customer's use of services so provided.

(G) No license under patents (other than the limited license to use) is granted by the Telephone Company or shall be implied or arise by estoppel, with respect to any service offered under this tariff. The Telephone Company will defend the customer against claims of patent infringement arising solely from the use by the customer of services offered under this tariff and will indemnify such customer for any damages awarded based solely on such claims.

(H) The Telephone Company's failure to provide or maintain services under this tariff shall be excused by labor difficulties, governmental orders, civil commotions, criminal actions taken against the Telephone Company, acts of God and other circumstances beyond the Telephone Company's reasonable control, subject to the Credit Allowance for a Service Interruption as set forth in Section 2.4.4. (N)

2. General Regulations (Cont'd)

2.1 Undertaking of the Telephone Company (Cont'd) (N)

2.1.4 Provision of Services

The services offered under the provisions of this tariff are subject to availability. The Telephone Company, to the extent that such services are or can be made available with reasonable effort, and after provision has been made for the Telephone Company's telephone exchange services, will provide to the customer upon reasonable notice services offered in other applicable sections of this tariff at rates and charges specified therein.

2.1.5 Installation and Termination of Services

The Access Services provided under this tariff (A) include Telephone Company communication facilities up to the Point of Termination as defined in Section 2.6 which denotes the demarcation point and (B) will be installed by the Telephone Company to such Point of Termination. If the Point of Termination is moved subsequent to the original installation, the charges as set forth in Section 6.7.5 for Switched Access Services apply as appropriate. Any additional terminations at the customer's premises beyond such Point of Termination are the sole responsibility of the customer.

2.1.6 Maintenance of Services

The services provided under this tariff shall be maintained by the Telephone Company. The customer or others may not rearrange, move, disconnect, remove or attempt to repair any facilities provided by the Telephone Company, other than by connection or disconnection to any interface means used, except with the written consent of the Telephone Company.

2.1.7 Changes and Substitutions

Except as provided for equipment and systems subject to FCC Part 68 Regulations at 47 C.F.R. Section 68.110(b), the Telephone Company may, where such action is reasonably required in the operation of its business, (A) substitute, change or rearrange any facilities used in providing service under this tariff, including but not limited to, (1) substitution of different metallic facilities, (2) substitution of carrier or derived facilities for metallic facilities used to provide other than metallic facilities and (3) substitution of metallic facilities for carrier or derived facilities used to (N)

2. General Regulations (Cont'd)

2.1 Undertaking of the Telephone Company (Cont'd) (N)

2.1.7 Changes and Substitutions (Cont'd)

provide other than metallic facilities, (B) change minimum protection criteria, (C) change operating or maintenance characteristics of facilities or (D) change operations or procedures of the Telephone Company. In case of any such substitution, change or rearrangement, the transmission parameters will be within the range as set forth in Section 6. The Telephone Company shall not be responsible if any such substitution, change or rearrangement renders any customer furnished services obsolete or requires modification or alteration thereof or otherwise affects their use or performance. If such substitution, change or rearrangement materially affects the operating characteristics of the facility, the customer will be given adequate notice in writing. Reasonable time will be allowed for any redesign and implementation required by the change in operating characteristics. The Telephone Company will work cooperatively with the customer to determine reasonable notification requirements.

3 Refusal and Discontinuance of Service

(A) Unless the provisions of Section 2.2.2(B) apply, if the customer fails to comply with Sections 2.1.6, 2.2.3, 2.3.1, 2.3.4, 2.3.5 or 2.4, including any payments to be made by it on the dates and times herein specified, the Telephone Company may, on thirty (30) days' written notice by Certified U.S. Mail to the person designated by the customer to receive such notices of noncompliance, refuse additional applications for service and/or refuse to complete any pending orders for service at any time thereafter. If the Telephone Company does not refuse additional applications for service on the date specified in the thirty (30) days' notice, and the customer's noncompliance continues, nothing contained herein shall preclude the Telephone Company's right to refuse additional applications for service without further notice. (N)

2. General Regulations (Cont'd)

2.1 Undertaking of the Telephone Company (Cont'd) (N)

2.1.8 Refusal and Discontinuance of Service (Cont'd)

(B) Unless the provisions of Section 2.2.2.(B) apply, if the customer fails to comply with Sections 2.1.6, 2.2.3, 2.3.1, 2.3.4, 2.3.5 or 2.4, including any payments to be made by it on the dates and times herein specified, the Telephone Company may, on thirty (30) days written notice by Certified U.S. Mail to the person designated by the customer to receive such notices of noncompliance, discontinue the provision of the services involved at any time thereafter. In the case of such discontinuance, all applicable charges, including termination charges, shall become due. If the Telephone Company does not discontinue the provision of the services involved on the date specified in the thirty (30) days notice, and the customer's noncompliance continues, nothing contained herein shall preclude the Telephone Company's right to discontinue the provision of the services involved without further notice.

1.9 Limitation of Use of Metallic Facilities

Signals applied to a metallic facility shall conform to the limitations set forth in Technical Reference Publication AS No. 1. In the case of application of dc telegraph signaling systems, the customer shall be responsible, at its expense, for the provision of current limiting devices to protect the Telephone Company facilities from excessive current due to abnormal conditions and for the provision of noise mitigation networks when required to reduce excessive noise.

2.1.10 Notification of Service-Affecting Activities

The Telephone Company will provide the customer timely notification of service-affecting activities that may occur in normal operation of its business. Such activities may include, but are not limited to, equipment or facilities additions, removals or rearrangements, routine preventative maintenance and major switching machine change-out. Generally, such activities are not individual customer service specific; they affect many customer services. No specific advance notification period is applicable to all service activities. The Telephone Company will work cooperatively with the customer to determine the reasonable notification requirements. With some emergency or unplanned service-affecting conditions, such as an outage resulting from cable damage, notification to the customer may not be possible. (N)

2. General Regulations (Cont'd)

2.1 Undertaking of the Telephone Company (Cont'd)

2.1.11 Coordination with Respect to Network Contingencies

The Telephone Company intends to work cooperatively with the customer to develop network contingency plans in order to maintain maximum network capability following natural or man-made disasters which affect telecommunications services, in accordance with Part 64.401, Appendix A of the Federal Communications Commission's Rules and Regulations.

2.1.12 Provision and Ownership of Telephone Numbers

The Telephone Company reserves the reasonable right to assign, designate or change telephone numbers, any other call number designations associated with Access Services, or the Telephone Company serving central office prefixes associated with such numbers, when necessary in the conduct of its business. Should it become necessary to make a change in such number(s), the Telephone Company will furnish to the customer six months notice, by Certified U.S. Mail, of the effective date and an explanation of the reasons for such change(s). In the case of emergency conditions however, e.g., a fire in a wire center, it may be necessary to change a telephone number without six months notice in order to provide service to the customer.

2.2 Use

2.2.1 General

A Customer, authorized by the New Hampshire Public Utilities Commission, offering Public Utilities Common Carrier Services will receive service under NHPUC - No. 78, as set forth in Section 1. preceding.

2.2.2 Interference or Impairment

(A) The characteristics and methods of operation of any circuits, facilities or equipment provided by other than the Telephone Company and associated with the facilities utilized to provide services under this tariff shall not interfere with or impair service over any facilities of the Telephone Company, its affiliated companies, or its connecting and concurring carriers involved in its services, cause damage to their plant, impair the privacy of any communications carried over their facilities or create hazards to the employees of any of them or the public.

2. General Regulations (Cont'd)

2.2 Use (Cont'd)

2.2.2 Interference or Impairment (Cont'd)

(B) Except as provided for equipment or systems subject to the FCC Part 68 Rules in 47 C.F.R. Section 68.108, if such characteristics or methods of operation are not in accordance with (A) preceding, the Telephone Company will, where practicable, notify the customer that temporary discontinuance of the use of a service may be required; however, where prior notice is not practicable, nothing contained herein shall be deemed to preclude the Telephone Company's right to temporarily discontinue forthwith the use of a service if such action is reasonable under the circumstances. In case of such temporary discontinuance, the customer will be promptly notified and afforded the opportunity to correct the condition which gave rise to the temporary discontinuance. During such period of temporary discontinuance, credit allowance for service interruptions as set forth in Section 2.4.4 is not applicable.

2.2.3 Unlawful Use

The service provided under this tariff shall not be used for an unlawful purpose.

2.3 Obligations of the Customer

2.3.1 Damages

The customer shall reimburse the Telephone Company for damages to Telephone Company facilities utilized to provide services under this tariff caused by the negligence or willful act of the customer or resulting from the customer's improper use of the Telephone Company facilities, or due to malfunction of any facilities or equipment provided by other than the Telephone Company. Nothing in the foregoing provision shall be interpreted to hold one customer liable for another customer's actions. The Telephone Company will, upon reimbursement for damages, cooperate with the customer in prosecuting a claim against the person causing such damage and the customer shall be subrogated to the right of recovery by the Telephone Company for the damages to the extent of such payment.

2. General Regulations (Cont'd)

2.3 Obligations of the Customer (Cont'd)

2.3.2 Ownership of Facilities and Theft

Facilities utilized by the Telephone Company to provide service under the provisions of this tariff shall remain the property of the Telephone Company. Such facilities shall be returned to the Telephone Company by the customer, whenever requested, within a reasonable period following the request in as good condition as reasonable wear will permit.

2.3.3 Equipment Space and Power

The customer shall furnish or arrange to have furnished to the Telephone Company, at no charge, equipment space and electrical power required by the Telephone Company to provide services under this tariff at the points of termination of such services. The selection of ac or dc power shall be mutually agreed to by the customer and the Telephone Company. The customer shall also make necessary arrangements in order that the Telephone Company will have access to such spaces at reasonable times for installing, testing, repairing or removing Telephone Company services.

2.3.4 Availability for Testing

The services provided under this tariff shall be available to the Telephone Company at times mutually agreed upon in order to permit the Telephone Company to make tests and adjustments appropriate for maintaining the services in satisfactory operating condition. Such tests and adjustments shall be completed within a reasonable time. No credit will be allowed for any interruptions involved during such tests and adjustments.

2.3.5 Balance

All signals for transmission over the services provided under this tariff shall be delivered by the customer balanced to ground except for ground start, duplex (DX) and McCulloh-Loop (Alarm System) type signaling and dc telegraph transmission at speeds of 75 baud or less.

2.3.6 Design of Customer Services

Subject to the provisions of Section 2.1.7, the customer shall be solely responsible, at its own expense for the overall design of its services and for any redesigning or rearrangement of its services which may be required because of changes in facilities, operations or procedures of the Telephone Company, minimum protection criteria or operating or maintenance characteristics of the facilities.

2. General Regulations (Cont'd)

2.3 Obligations of the Customer (Cont'd)

2.3.7 References to the Telephone Company

The customer may advise End Users that certain services are provided by the Telephone Company in connection with the service the customer furnishes to End Users; however, the customer shall not represent that the Telephone Company jointly participates in the customer's services.

2.3.8 Claims and Demands for Damages

(A) With respect to claims of patent infringement made by third persons, the customer shall defend, indemnify, protect and save harmless the Telephone Company from and against all claims arising out of the combining with, or use in connection with, the services provided under this tariff, any circuit, apparatus, system or method provided by the customer.

(B) The customer shall defend, indemnify and save harmless the Telephone Company from and against suits, claims, losses or damages including punitive damages, attorneys' fees and court cost by third persons arising out of the construction, installation, operation, maintenance, or removal of the customer's circuits, facilities, or equipment connected to the Telephone Company's services provided under this tariff, including, without limitation, Workmen's Compensation claims, actions for infringement of copyright and/or unauthorized use of program material, libel and slander actions based on the content of communications transmitted over the customer's circuits, facilities or equipment, and proceedings to recover taxes, fines, or penalties for failure of the customer to obtain or maintain in effect any necessary certificates, permits, licenses, or other authority to acquire or operate the services provided under this tariff; provided, however, the foregoing indemnification shall not apply to suits, claims, and demands to recover damages for damage to property, death, or personal injury unless such suits, claims or demands are based on the tortious conduct of the customer, its officers, agents or employees.

2. General Regulations (Cont'd)

2.3 Obligations of the Customer (Cont'd)

2.3.8 Claims and Demands for Damages (Continued)

(C) The customer shall defend, indemnify and save harmless the Telephone Company from and against any suits, claims, losses or damages, including punitive damages, attorneys' fees and court costs by the customer or third parties arising out of any act or omission of the customer in the course of using services provided under this tariff.

2.3.9 Coordination with Respect to Network Contingencies

The customer shall, in cooperation with the Telephone Company, coordinate in planning the actions to be taken to maintain maximum network capability following natural or man-made disasters which affect telecommunications services.

2. General Regulations (Cont'd)

2.3 Obligations of the Customer (Cont'd)

2.3.10 Jurisdictional Report Requirements

A. General

The customer is required in accordance with the regulations specified following, to report projected and actual Switched Access Service(s) percentage(s) of interstate usage (PIU) to the Telephone Company unless specified otherwise in the regulations below. For purposes of developing and reporting percentages of interstate use, the customer shall consider every call that enters the customer's network (either directly or indirectly) at a point in a state different from the state in which the called station is located to be interstate. The customer shall consider every call that enters the customer's network (either directly or indirectly) at a point within the same state as that which the called party is located to be intrastate.

The customer is responsible for reporting percentages of interstate use by Feature Group, by traffic type (as defined in Section 2.6) and by Service Access Code, [as defined in Section 2.6 (including but not limited to 700 service access code and 800 Access Service)]. Service Access Code percentages are to be reported for originating usage. Percentages of interstate use are to be reported by the customer in whole numbers. The whole number percentages will be used by the Telephone Company to apportion the use, rates and/or nonrecurring charges between interstate and intrastate jurisdictions as detailed in Section 2.3.10 D.

- In the case of Feature Group D, where originating call detail is adequate and the Telephone Company is able to determine jurisdiction, the IC reported PIU will not be utilized. The originating PIU will be developed by the Telephone Company on a monthly basis, by end office, by dividing the measured originating access minutes by the total originating access minutes.

For purposes of implementation, the customer is required to update their jurisdictional report in conformance with the regulations contained herein, for the impending Effective Quarter (refer to Section 2.3.10 B). If less than thirty calendar days exist from the effective date of this tariff to the impending Effective Quarter, the customer is required to update their report for the ensuing Effective Quarter.

2. General Regulations (Cont'd)

2.3 Obligations of the Customer (Cont'd)

2.3.10 Jurisdictional Report Requirements (Cont'd)

A. General (Cont'd)

When ordering Switched Access Service for both interstate and intrastate use, the customer is required to report to the Telephone Company projected originating and terminating PIUs for each service ordered, for which adequate call detail (from which jurisdiction might otherwise be determined) may not be available to the Telephone Company. From the projected PIU, the Telephone Company will determine the projected percentage of intrastate use by subtracting the PIU from one-hundred; for example:

- o 100 - the projected PIU originating = the projected percent of intrastate use originating.

- o 100 - the projected PIU terminating = the projected percent of intrastate use terminating.

In the event that the projected PIU(s) provided by the customer when ordering service changes prior to the date upon which the Telephone Company provides that service to the customer, the customer shall report the PIU change(s) to the Telephone Company prior to service completion.

B. Changes in Projected PIUs

Subsequent to the customer's report at the time of ordering Switched Access Service, the customer is required to report to the Telephone Company any change in the projected PIU and shall report such change to the Telephone Company on a quarterly basis. The customer shall report such changes effective on the first day of January, April, July and October. The customer shall forward the revised report so that it is received by the Telephone Company no later than the 21st day of January, April, July and October. Each report is to show the PIU for the appropriate past three month period as shown in the following example:

2. General Regulations (Cont'd)

2.3 Obligations of the Customer (Cont'd)

2.3.10 Jurisdictional Report Requirements (Cont'd)

B. Changes in Projected PIUs (Cont'd)

EFFECTIVE QUARTER	REPORTING PIU OVER 3 MONTH PERIOD BEGINNING	ENDING	REPORT DUE TO TELCO NO LATER THAN
January 1	October 1	December 31	January 21
April 1	January 1	March 31	April 21
July 1	April 1	June 30	July 21
October 1	July 1	September 30	October 21

The changes so reported will be used by the Telephone Company as the basis for billing over the next three months and the changes will be effective on the bill date of the month immediately following the effective quarter(s) listed above. No prorating or back billing will be done based on the report.

In either of the following events, the customer is not required to prepare an updated report: (1) when the projected PIU(s) provided by the customer when ordering service do not change, or (2) when the revised PIU(s) reported by a customer in an updated quarterly report do not change from one quarterly report period to the next. In such circumstances, the Telephone Company will continue to use the PIUs last reported by the customer.

C. Service Specific Reporting Requirements

(1) In compliance with and in addition to the report requirements set forth in the preceding regulations, when FGB is used for non-800 Access, the customer is required to include in that percentage all 800 Access terminating usage which terminates on a common line. Conversely, when FGB is used for 800 Access Service, the customer's reported PIU for 800 Access terminating usage shall exclude 800 Access terminating usage which terminates on a common line.

(2) In compliance with and in addition to the report requirements set forth in the preceding regulations, when FGD is used for non-800 Access, the customer is required to include in that percentage all 800 Access terminating usage which terminates on a common line. Conversely, when FGD is used for 800 Access Service, the customer's reported PIU for 800 Access terminating usage shall exclude 800 Access terminating usage which terminates on a common line.

2. General Regulations (Cont'd)

2.3 Obligations of the Customer (Cont'd)

2.3.10 Jurisdictional Report Requirements (Cont'd)

C. Service Specific Reporting Requirements (Cont'd)

(3) When a customer orders FGD Service, in addition to the preceding regulations, the customer shall provide the PIU for each end office.

(4) When a customer orders Directory Assistance Service, the customer shall, in its order, provide the projected PIU for terminating use for each Directory Access Service group ordered. (A method the customer may wish to adopt could be to use its terminating traffic from its premises to the involved Directory Assistance Location).

2. General Regulations (Cont'd)

2.3 Obligations of the Customer (Cont'd)

2.3.10 Jurisdictional Report Requirements (Cont'd)

D. Determination and Apportionment of Rates and Nonrecurring Charges

(1) The projected interstate percentage of use and intrastate percentage of use will be used to determine the charges as follows:

a. The number of originating access minutes for a group will be multiplied by the projected interstate percentage of originating use to determine the originating interstate access minutes. The number of originating interstate access minutes so determined will be subtracted from the total number of originating access minutes for the group to determine the originating intrastate access minutes.

b. The number of terminating access minutes for a group will be multiplied by the projected interstate percentage of terminating use to determine the terminating interstate access minutes. The number of terminating interstate access minutes so determined will be subtracted from the total number of terminating access minutes for the group to determine the terminating intrastate access minutes.

The intrastate access minutes for a group will be billed as set forth in (2) following.

(2) The following is applicable to all Feature Groups. The customer projected PIUs will be used for the apportionment of rates and/or nonrecurring charges until the end of the quarter during which the service was activated. The projected interstate percentage will be used for apportionment by the Telephone Company until it is superseded by the data contained in a customer's revised report.

The customer reported interstate percentages of use will be used for the apportionment of nonrecurring charges as follows:

a. The customer reported interstate percentage of originating use will be used to determine the apportionment of charges for originating lines or trunks.
b. The customer reported interstate percentage of terminating use will be used to determine the apportionment of charges for terminating lines or trunks.
c. The average of the customer reported interstate percentage of originating use and the customer reported interstate percentage of terminating use will be used to determine the apportionment of charges for two-way lines or trunks (i.e. originating percentage interstate use + terminating percentage interstate use divided by 2 = average percent of interstate use for two-way lines or trunks.

2. General Regulations (Cont'd)

2.3 Obligations of the Customer (Cont'd)

2.3.10 Jurisdictional Report Requirements (Cont'd)

E. Jurisdictional Audits

The customer shall keep sufficient detail from which the percentages of interstate use for all Feature Groups and other applicable services can be ascertained and, upon request of the Telephone Company, make such records available for inspection and audit. The audit shall be performed by an independent party as authorized by the Telephone Company. Such a request will be initiated by the Telephone Company no more than once per year. The customer shall supply the data within 30 calendar days of the Telephone Company request.

In the event that an audit ascertains that any reported percentage of interstate use was different from the audited percentage, the Telephone Company shall apply the difference to all usage affected by the audit. The customer shall be back billed or credited, to the date that the percentage was reported, but not to exceed twelve months.

In the event that an audit ascertains that a customer has misreported the percentage of use by 5% or more, the customer shall reimburse the Telephone Company for the cost of the audit. Proof of cost shall be the bills submitted to the Telephone Company by the auditor. Bills are subject to a late payment penalty and payment shall be made in immediately available funds, within 31 days from receipt of bill, or by the following bill date whichever is shorter, in accordance with regulations set forth in Section 2.4.1.

For purposes of implementation, the Telephone Company will initiate the jurisdictional audit process no sooner than one year from the effective date of this tariff.

2.3.11 Determination of Intrastate Charges for Mixed Interstate and Intrastate Access Service

When mixed interstate and intrastate Access Service is provided, all charges (i.e., nonrecurring, monthly and/or usage) including optional features charges, will be prorated between interstate and intrastate. The percentages as set forth in Section 2.3.10 will serve as the basis for calculating the charges. The percentages of an Access Service to be charged as intrastate are applied in the following manner:

(A) For monthly and/or usage and nonrecurring chargeable rate elements associated with Access Services multiply the intrastate percent times the quantity of chargeable elements times the state tariff rate per element.

2. General Regulations (Cont'd)

2.3 Obligations of the Customer (Cont'd)

2.3.11 Determination of Intrastate Charges for Mixed Interstate and Intrastate Access Service (Cont'd)

(B) For usage sensitive (i.e., access minutes) chargeable rate elements, charges are calculated as follows:

(1) multiply the percent intrastate use times actual use (i.e., measured, Telephone Company assumed average use) times the state tariff rate.

The intrastate percentage will change as revised usage reports are submitted or a revised percentage is calculated as set forth in Section 2.3.10.

2.3.12 Report Requirements When More Than One Exchange Telephone Company is Involved

In addition to furnishing the jurisdictional reports specified in Sections 2.3.10 and 2.3.11, when service(s) is provided where one end of the Local Transport element is in the Telephone Company operating territory and the other end is in another Exchange Telephone Company operating territory, the Customer will provide on the first business day of each calendar month a record of usage data and the other Exchange Telephone Company associated with it. This information will be used to calculate billing as set forth in Section 2.4.7.

2. General Regulations (Cont'd)

2.4 Payment Arrangements and Credit Allowances

2.4.1 Payment of Rates, Charges and Deposits

(A) The Telephone Company will, in order to safeguard its interests, require only a customer which has a proven history of late payments to the Telephone Company or does not have established credit except for a customer which is a successor of a company which has established credit and has no history of late payments to the Telephone Company, to make a deposit prior to or at any time after the provision of a service to the customer to be held by the Telephone Company as a guarantee of the payment of rates and charges. Such deposit may not exceed the actual or estimated rates and charges for the service for a two month period. The fact that a deposit has been made in no way relieves the customer from complying with the Telephone Company's regulations as to the prompt payment of bills. At such time as the provision of the service to the customer is terminated the amount of the deposit will be credited to the customer's account and any credit balance which may remain will be refunded. At the option of the Telephone Company, such a deposit will be refunded or credited to the customer's account when the customer has established credit or after the customer has established a one year prompt payment record at any time prior to the termination of the provision of the service to the customer. In case of a cash deposit, for the period the deposit is held by the Telephone Company, the customer will receive interest at the same percentage rate as that set forth in (B)(2)(b)(i) or in (B)(2)(b)(ii), whichever is lower. Interest will accrue for the number of days from the date the customer deposit is received by the Telephone Company to and including the date such deposit is credited to the customer's account or the date the deposit is refunded by the Telephone Company. Should a deposit be credited to the customer account, as indicated above, no interest will accrue on the deposit from the date such deposit is credited to the customer's account.

(B) The Telephone Company shall bill on a current basis all charges incurred by and credits due to the customer under this tariff attributable to services established or discontinued or provided during the preceding billing period. In addition, the Telephone Company shall bill in advance charges for all services to be provided during the ensuing billing period except for charges associated with service usage and for the Federal Government which will be billed in arrears.

2. General Regulations (Cont'd)

2.4 Payment Arrangements and Credit Allowances (Cont'd)

2.4.1 Payment of Rates, Charges and Deposits (Cont'd)

At the option of the customer, all nonrecurring charges associated with a Standard or Negotiated Interval Access Order may be billed over a three month period in monthly installments subject to the following:

- All nonrecurring charges associated with a given Access Order must be billed in monthly installments.

- The total of the nonrecurring charges associated with a given Access Order must be $500.00 or more.

- 50% of the total nonrecurring charges will be billed in the first monthly billing period after the charges are incurred, and 25% of the total nonrecurring charges plus a Service Charge will be billed in each of the following two monthly billing periods.

- The Service Charge is a fraction of the total remaining nonrecurring charges. The Service Charge is calculated as follows:

Service Charge	=	30 x	decimal value set forth in (B)(2)(b)(ii) following	x Total Remaining Nonrecurring Charges

- The customer must request installment billing on or before the Application Date for a Standard or Negotiated Interval Access Order.

- The customer may elect to pay the unbilled charges before the expiration of the installment plan.

- More than one installment plan may be in effect for the same customer at the same time.

- If the customer disconnects service before the expiration of the plan period, all unbilled charges plus a Service Charge, if applicable, will be included in the final bill rendered.

2. General Regulations (Cont'd)

2.4 Payment Arrangements and Credit Allowances (Cont'd)

2.4.1 Payment of Rates, Charges and Deposits (Cont'd)

The bill day (i.e., the billing date of a bill for a customer for Access Service under this tariff), the period of service each bill covers and the payment date will be as follows:

(1) The Telephone Company will establish a bill day each month for each customer account. The bill will cover nonusage sensitive service charges for the ensuing billing period for which the bill is rendered, any known unbilled nonusage sensitive charges for prior periods and unbilled usage charges for the period after the last bill day thru the current bill day. Any known unbilled usage charges for prior periods and any known unbilled adjustments will be applied to this bill. Payment for such bills is due as set forth in (2) following. If payment is not received by the payment date, as set forth in (2) following in immediately available funds, a late payment penalty will apply as set forth in (2) following.

(2)(a) All bills dated as set forth in (1) preceding for service, provided to the customer by the Telephone Company, are due 31 days (payment date) after the bill day or by the next bill date (i.e., same date in the following month as the bill date) whichever is the shortest interval, except as provided herein, and are payable in immediately available funds. If such payment date would cause payment to be due on a Saturday, Sunday or a Legal Holiday, payment for such bills will be due from the customer as follows:

If such payment date falls on a Sunday or on a Legal Holiday which is observed on a Monday, the payment date shall be the first non-Holiday day following such Sunday or Legal Holiday. If such payment date falls on a Saturday or on a Legal Holiday which is observed on Tuesday, Wednesday, Thursday, or Friday, the payment date shall be the last non-Holiday day preceding such Saturday or Legal Holiday.

2. General Regulations (Cont'd)

2.4 Payment Arrangements and Credit Allowances (Cont'd)

2.4.1 Payment of Rates, Charges and Deposits (Cont'd)

(b) Further, if any portion of the payment is received by the Telephone Company after the payment date as set forth in (a) preceding, or if any portion of the payment is received by the Telephone Company in funds which are not immediately available to the Telephone Company, then a late payment penalty shall be due to the Telephone Company. The late payment penalty shall be the portion of the payment not received by the payment date times a late factor. The late factor shall be the lesser of:

(i) the highest interest rate (in decimal value) which may be levied by law for commercial transactions for the number of days from the payment date to and including the date that the customer actually makes the payment to the Telephone Company, or

(ii) 0.0005 per day for the number of days from the payment date to and including the date that the customer actually makes the payment to the Telephone Company.

(c) In the event that a billing dispute occurs concerning any charges billed to the customer by the Telephone Company the following regulations will apply.

- The first day of the dispute shall be the date on which the customer furnishes the Telephone Company with the account number under which the bill has been rendered, the date of the bill and the specific items on the bill being disputed.

- The date of resolution shall be the date on which the Telephone Company completes its investigation of the dispute, notifies the customer of the disposition and, if the billing dispute is resolved in favor of the customer, applies credit for the correct disputed amount, the disputed amount penalty and/or late payment penalty as appropriate.

2. General Regulations (Cont'd)

2.4 Payment Arrangements and Credit Allowances (Cont'd)

2.4.1 Payment of Rates, Charges and Deposits (Cont'd)

- If a billing dispute is resolved in favor of the Telephone Company, any payments withheld pending resolution of the dispute shall be subject to the late payment penalty set forth in (b) preceding. Further, the customer will not receive credit for the disputed amount or the disputed amount penalty.

- If a customer disputes a bill within three months of the payment date and pays the total billed amount on or before the payment date, and the billing dispute is resolved in favor of the customer, the customer will receive a credit for a disputed amount penalty from the Telephone Company for the period starting with the date of payment and ending on the date of resolution. The credit for a disputed amount penalty shall be as set forth following.

- If a customer disputes a bill within three months of the payment date and pays the total billed amount after the payment date and the billing dispute is resolved in favor of the customer, the customer will receive a credit for a disputed amount penalty from the Telephone Company for the period starting with the date of payment and ending on the date of resolution. The credit for a disputed amount penalty shall be as set forth following. The late payment penalty applied to the disputed amount resolved in the customer's favor as set forth in (b) preceding will be credited.

- If a customer disputes a bill within three months of the payment date and does not pay the disputed amount or does not pay the billed amount (i.e., the nondisputed and disputed amount), and the billing dispute is resolved in favor of the customer, the customer will not receive a credit for a disputed amount penalty from the Telephone Company. The late payment penalty applied to the disputed amount resolved in the customer's favor as set forth in (b) preceding will be credited.

2. General Regulations (Cont'd)

2.4 Payment Arrangements and Credit Allowances (Cont'd)

2.4.1 Payment of Rates, Charges and Deposits (Cont'd)

- If a customer disputes a bill after three months from the payment date and pays the total billed amount on or before the dispute date, and the billing dispute is resolved in favor of the customer, the customer will receive a credit for a disputed amount penalty from the Telephone Company for the period starting with the date of dispute and ending on the date of resolution. The credit for a disputed amount penalty shall be as set forth following. The customer will not receive a credit for the late payment penalty.

- If a customer disputes a bill after three months from the payment date and does not pay the disputed amount or does not pay the billed amount (i.e., the nondisputed amount and disputed amount) and the billing dispute is resolved in favor of the customer, the customer will not receive a credit for a disputed amount penalty from the Telephone Company. However, if the customer pays the disputed amount or the billed amount after the date of dispute and before the date of resolution the customer will receive a credit for a disputed amount penalty from the Telephone Company for the period starting with the date of payment and ending on the date of resolution. The credit for a disputed amount penalty shall be as set forth following. The customer will receive a credit for the late payment penalty, if applicable, from the Telephone Company. The late payment penalty credit shall be the disputed amount resolved in the customer's favor times a late payment penalty factor as set forth in (b) preceding, for the period starting with the date of dispute and ending on the date of payment of the disputed amount or the date of resolution whichever occurs first.

2. General Regulations (Cont'd)

2.4 Payment Arrangements and Credit Allowances (Cont'd)

2.4.1 Payment of Rates, Charges and Deposits (Cont'd)

The disputed amount penalty shall be the disputed amount resolved in the customer's favor times a penalty factor. The penalty factor shall be the lesser of:

(i) the highest interest rate (in decimal value) which may be levied by law for commercial transactions for the number of days from the first date to and including the last date of the period involved, or

(ii) 0.0005 per day for the number of days from the first date to and including the last date of the period involved.

(C) Adjustments for the quantities of services established or discontinued in any billing period beyond the minimum period set forth for services in other sections of this tariff will be prorated to the number of days or major fraction of days based on a 30 day month. The Telephone Company will, upon request and if available, furnish such detailed information as may reasonably be required for verification of any bill.

(D) When a rate as set forth in this tariff is shown to more than two decimal places, the charges will be determined using the rate shown. The resulting amount will then be rounded to the nearest penny (i.e., rounded to two decimal places).

(E) When more than one copy of a customer bill for services provided under the provisions of this tariff is furnished to the customer, an additional charge applies for each additional copy of the bill as set forth in Section 13.

2. General Regulations (Cont'd)

2.4 Payment Arrangements and Credit Allowances (Cont'd)

2.4.2 Minimum Periods

The minimum period for which services are provided and for which rates and charges are applicable is one month.

The minimum period for which service is provided and for which rates and charges are applicable for a Specialized Service or Arrangement provided on an individual case basis as set forth in Section 12 is one month unless a different minimum period is established with the individual case filing.

When a service is discontinued prior to the expiration of the minimum period, charges are applicable, whether the service is used or not. The applicable charge will be the total monthly charges, at the rate level in effect at the time service is discontinued, for the remainder of the minimum period plus all applicable nonrecurring charges.

2.4.3 Cancellation of an Order for Service

Provisions for the cancellation of an order for service are set forth in other applicable sections of this tariff.

2.4.4 Credit Allowance for Service Interruptions

(A) General

A service is interrupted when it becomes unusable to the customer because of a failure of a facility component used to furnish service under this tariff or in the event that the protective controls applied by the Telephone Company result in the complete loss of service by the customer as set forth in Section 6.5. An interruption period starts when an inoperative service is reported to the Telephone Company and ends when the service is operative.

(B) When A Credit Allowance Applies

In case of an interruption to any service, allowance for the period of interruption, if not due to the negligence of the customer, shall be as follows:

(1) For Switched Access Service no credit shall be allowed for an interruption of less than 24 hours. The customer shall be credited for an interruption of 24 hours or more at the rate of 1/30 of the sum of (a) any applicable monthly rates or (b) the assumed minutes of use charge, when applicable for the service involved, for each period of 24 hours or major fraction thereof that the interruption continues.

2. General Regulations (Cont'd)

2.4 Payment Arrangements and Credit Allowances (Cont'd)

2.4.4 Credit Allowance for Service Interruptions (Cont'd)

(2) The credit allowance(s) for an interruption or for a series of interruptions shall not exceed the sum of (a) any applicable monthly rate or (b) the assumed minutes of use charge, whichever is applicable for the service involved, for the service interrupted in any one monthly billing period.

(3) Service interruptions for Specialized Service or Arrangements provided under the provisions of Section 12 following shall be administered in the same manner as those set forth in this section unless other regulations are specified with the individual case filing.

(C) When a Credit Allowance Does Not Apply

No credit allowance will be made for:

(1) Interruptions caused by the negligence of the customer.

(2) Interruptions of a service due to the failure of equipment or systems provided by the customer or others.

(3) Interruptions of a service during any period in which the Telephone Company is not afforded access to the premises where the service is terminated.

(4) Interruptions of a service when the customer has released that service to the Telephone Company for maintenance purposes, to make rearrangements, or for the implementation of an order for a change in the service during the time that was negotiated with the customer prior to the release of that service. Thereafter, a credit allowance as set forth in (B) preceding applies.

(5) Periods when the customer elects not to release the service for testing and/or repair and continues to use it on an impaired basis.

(6) Periods of temporary discontinuance as set forth in Section 2.2.2(B).

(7) An interruption or a group of interruptions, resulting from a common cause, for amounts less than one dollar.

2. General Regulations (Cont'd)

2.4 Payment Arrangements and Credit Allowances (Cont'd)

2.4.4 Credit Allowance for Service Interruptions (Cont'd)

(D) Use of an Alternative Service Provided by the Telephone Company

Should the customer elect to use an alternative service provided by the Telephone Company during the period that a service is interrupted, the customer must pay the tariffed rates and charges for the alternative service used.

(E) Temporary Surrender of a Service

In certain instances, the customer may be requested by the Telephone Company to surrender a service for purposes other than maintenance, testing or activity relating to a service order. If the customer consents, a credit allowance will be granted. The credit allowance will be 1/1440 of the monthly rate for each period of 30 minutes or fraction thereof that the service is surrendered. In no case will the credit allowance exceed the monthly rate for the service surrendered in any one monthly billing period.

2.4.5 Re-establishment of Service Following Fire, Flood or Other Occurrence

(A) Nonrecurring Charges Do Not Apply

Charges do not apply for the re-establishment of service following a fire, flood or other occurrence attributed to an Act of God provided that:

(1) The service is of the same type as was provided prior to the fire, flood and other occurrence.

(2) The service is for the same customer.

(3) The service is at the same location on the same premises.

(4) The re-establishment of service begins within 60 days after Telephone Company service is available. (The 60 day period may be extended a reasonable period if the renovation of the original location on the premises affected is not practical within the allotted time period).

(B) Nonrecurring Charges Apply

Nonrecurring Charges apply for establishing service at a different location on the same premises or at a different premises pending re-establishment of service at the original location.

2. General Regulations (Cont'd)

2.4 Payment Arrangements and Credit Allowances (Cont'd)

2.4.6 Title or Ownership Rights

The payment of rates and charges by customers for the services offered under the provisions of this tariff does not assign, confer or transfer title or ownership rights to proposals or facilities developed or utilized, respectively, by the Telephone Company in the provision of such services.

2. General Regulations (Cont'd)

2.4 Payment Arrangements and Credit Allowances (Cont'd)

2.4.7 Ordering, Rating and Billing of Access Services Where More Than One Exchange Telephone Company is Involved

The Telephone Company will handle ordering, rating and billing of Access Services under this tariff where more than one Exchange Telephone Company is involved in the provision of Access Service as follows:

(A) (1) When a Feature Group A Switched Access Service is ordered by a customer where one end of the Local Transport element is in the Telephone Company operating territory and the other end is in another Exchange Telephone Company operating territory, the Exchange Telephone Company in whose territory the first point of switching is located will accept the order. In addition the Exchange Telephone Company in whose territory the customer point of termination is located must also receive a copy of the order from the customer. The Exchange Telephone Company that accepts the order will then determine the charges involved, arrange to provide the Access Service ordered and bill the charges in accordance with its Access Service tariff.

(2) When a Feature Group B Switched Access Service is ordered by a customer where one end of the Local Transport element is in the Telephone Company operating territory and the other end is in another Exchange Telephone Company operating territory, and when notified by the Telephone Company which accepts the order that the involved Exchange Telephone Companies cannot implement multi-company billing (meet point billing), ordering, provisioning, rating, and billing regulations, as set forth in (1) preceding for Feature Group A, will also apply to Feature Group B.

2. General Regulations (Cont'd)

2.4 Payment Arrangements and Credit Allowances (Cont'd)

2.4.7 Ordering, Rating and Billing of Access Services Where More Than One Exchange Telephone Company is Involved (Cont'd)

(B) Except as set forth in (A)(2) preceding, when Feature Group B, C* and/or D Switched Access Service and/or Directory Assistance Service is ordered by a customer where one end of the Local Transport element is in the Telephone Company operating territory and the other end is in another Exchange Telephone Company operating territory, the orders shall be received as follows:

(1) For FGC* and/or Directory Assistance Service, the Exchange Telephone Company in whose operating territory the end office is located must receive the order from the customer.

(2) For Feature Group B and/or D Switched Access Service ordered to an end office, the Exchange Telephone Company in whose operating territory the end office is located must receive the order from the customer.

(3) For Feature Group B and/or D Switched Access Service ordered to an access tandem, the Exchange Telephone Company in whose territory the access tandem is located must receive the order from the customer.

(4) For the Service ordered set forth in (1), (2) and (3) preceding, the Exchange Telephone Company in whose territory the customer premises is located must also receive a copy of the order from the customer.

Each Exchange Telephone Company will provide the portion of the Local Transport element in its operating territory to an interconnection point (IP) with another Exchange Telephone Company and will bill the charges in accordance with its Access Service tariff. The charges for the Local Transport element will be determined as set forth in (D) following. The Local Transport Facility and Termination rates are set forth in Section 6. All other appropriate charges in each Exchange Telephone Company tariff are applicable.

* As of August 21, 1992, FGC is available from end offices in operating territories of only Exchange Telephone Companies other than New England Telephone.

2. General Regulations (Cont'd)

2.4 Payment Arrangements and Credit Allowances (Cont'd)

2.4.7 Ordering, Rating and Billing of Access Services Where More Than One Exchange Telephone Company is Involved (Cont'd)

(C) When a WATS Access Line Service is ordered and Channel Mileage applies (i.e., the WATS Serving Office and the end user end office are not coterminous) and one end of the Channel Mileage element is in the Telephone Company operating territory and the other end is in another Exchange Telephone Company operating territory, the Exchange Telephone Company in whose operating territory the end office is located must receive the order from the customer. In addition, the Exchange Telephone Company in whose territory the WATS Serving Office is located must also receive a copy of the order from the customer. Each Exchange Telephone Company will provide the portion of the Channel Mileage element in its operating territory to an interconnection point (IP) with another Exchange Telephone Company and will bill the charges in accordance with its Access Service tariff. The rate for the Channel Mileage element will be determined as set forth in (D) following. All other appropriate charges in each Exchange Telephone Company tariff are applicable.

(D) The charges for the Local Transport element and the rate for the Channel Mileage element for services provided as set forth in (B) and (C) preceding are determined as follows:

(1) Determine the appropriate Local Transport Facility or Channel Mileage by computing the airline mileage between the two ends of the Local Transport Facility or Channel Mileage element. Determine the airline mileage for the Local Transport Facility Charge using the V & H Coordinate method as set forth National Exchange Carrier Association, Inc. Tariff F.C.C. No. 4. Determine the airline mileage for the Channel Mileage element using the V & H Coordinate method.

2. General Regulations (Cont'd)

2.4 Payment Arrangements and Credit Allowances (Cont'd)

2.4.7 Ordering, Rating and Billing of Access Services Where More Than One Exchange Telephone Company is Involved (Cont'd)

(D) (Cont'd)

(2) For Feature Groups B, C* and D Switched Access Services, the Local Transport charges are determined as set forth in (a) thru (e) following.

(a) Multiply:

The number of access minutes
by
the number of airline miles as determined in (1) preceding
by
the Telephone Company's appropriate Local Transport Facility per mile per access minute rate
by
the Telephone Company's billing percentage factor.

(b) Divide:

The product of (a) by 100:

The resulting amount is the total Local Transport Facility charge.

(c) Multiply:

The number of access minutes
by
the Telephone Company's appropriate Local Transport Termination per minute rate.

(d) Divide:

The product of (c) by two (2). The resulting amount is the total Local Transport Termination charge.

(e) Add:

The products of (b) and (d) for the total Local Transport charges.

*As of August 21, 1992, FGC is available from end offices in operating territories of only Exchange Telephone Companies other than New England Telephone.

2. General Regulations (Cont'd)

2.4 Payment Arrangements and Credit Allowances (Cont'd)

2.4.7 Ordering, Rating and Billing of Access Services Where More Than One Exchange Telephone Company is Involved (Cont'd)

(E) The interconnection points will be determined by the Exchange Telephone Companies involved. The billing percentage (BP) factor for the Telephone Company for the service between the two involved offices is listed in National Exchange Carrier Association, Inc. Tariff F.C.C. No. 4.

2. General Regulations (Cont'd)

2.4 Payment Arrangements and Credit Allowances (Cont'd)

2.4.7 Ordering, Rating and Billing of Access Services Where More Than One Exchange Telephone Company is Involved (Cont'd)

(F) Example - Switched Access

(1) Layout

a) Feature Group B, C* or D Switched Access is ordered to End Office A.
b) End Office A is in operating territory of Exchange Telephone Company A.
c) Premises of ordering IC is in operating territory of Exchange Telephone Company B.

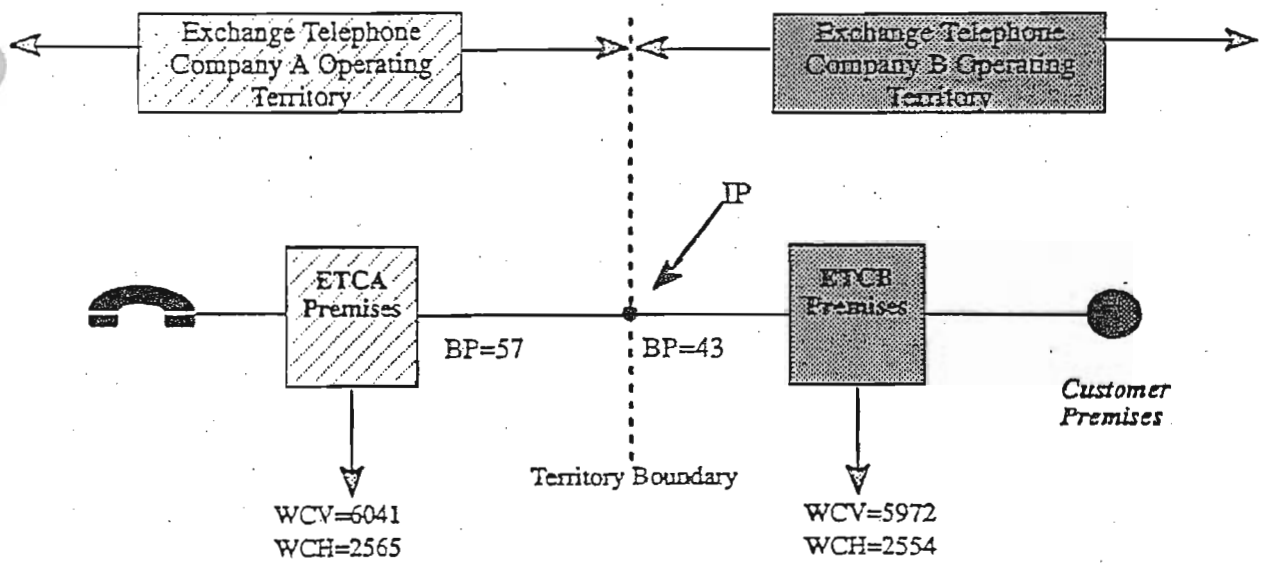

*As of August 21, 1992, FGC is available from end offices in operating territories of only Exchange Telephone Companies other than New England Telephone.

2. General Regulations (Cont'd)

2.5 Connections

Equipment and Systems (i.e., terminal equipment, multiline terminating systems and communications systems) may be connected with Switched Access Service furnished by the Telephone Company where such connection is made in accordance with the provisions specified in Technical Publication PUB AS No. 1 and in Section 2.1.

2.6 Definitions

Certain terms used herein are defined as follows:

Access Code

The term "Access Code" denotes a uniform five or seven digit code assigned by the Telephone Company to an individual customer. The five digit code has the form 10XXX, and the seven digit code has the form 950-0XXX or 950-1XXX.

Access Minutes

The term "Access Minutes" denotes that usage of exchange facilities in intrastate service for the purpose of calculating chargeable usage. On the originating end of an intrastate call, usage is measured from the time the originating end user's call is delivered by the Telephone Company to and acknowledged as received by the customer's facilities connected with the originating exchange. On the terminating end of an intrastate call, usage is measured from the time the call is received by the end user in the terminating exchange. Timing of usage at both originating and terminating ends of an intrastate call shall terminate when the calling or called party disconnects, whichever event is recognized first in the originating and terminating exchanges, as applicable.

Access Tandem

The term "Access Tandem" denotes a Telephone Company switching system that provides a concentration and distribution function for originating or terminating traffic between end offices and a customer's premises.

2. General Regulations (Cont'd)

2.6 Definitions (Cont'd)

Answer/Disconnect Supervision

The term "Answer/Disconnect Supervision" denotes the transmission of the switch trunk equipment supervisory signal (off-hook or on-hook) to the customer's point of termination as an indication that the called party has answered or disconnected.

Attenuation Distortion

The term "Attenuation Distortion" denotes the difference in loss at specified frequencies relative to the loss at 1004 Hz, unless otherwise specified.

Bit

The term "Bit" denotes the smallest unit of information in the binary system of notation.

Business Day

The term "Business Day" denotes the time of day that a company is open for business. Generally, in the business community, these are 8:00 or 9:00 A.M. to 5:00 or 6:00 P.M., respectively, with an hour for lunch, Monday through Friday, resulting in a standard forty (40) hour work week. However, Business Day hours for the Telephone Company may vary based on company policy, union contract and location. To determine such hours for an individual company, or company location, that company should be contacted.

Busy Hour Minutes of Capacity (BHMC)

The term "Busy Hour Minutes of Capacity (BHMC)" denotes the customer specified maximum amount of Switched Access Service access minutes the customer expects to be handled in an end office switch during any hour in an 8:00 A.M. to 11:00 P.M. period for the Feature Group ordered. This customer furnished BHMC quantity is the input data the Telephone Company uses to determine the number of transmission paths for the Feature Group ordered.

2. General Regulations (Cont'd)

2.6 Definitions (Cont'd)

Call

The term "Call" denotes a customer attempt for which the complete address code (e.g., 0-, 911, or 10 digits) is provided to the serving dial tone office.

Carrier or Common Carrier

See Interexchange Carrier.

CCS

The term "CCS" denotes a hundred call seconds, which is a standard unit of traffic load that is equal to 100 seconds of usage or capacity of a group of servers (e.g., trunks).

Central Office

The term "Central Office" denotes a local Telephone Company switching system where Telephone Exchange Service customer station loops are terminated for purposes of interconnection to each other and to trunks.

Central Office Prefix

The term "Central Office Prefix" denotes the first three digits (NXX) of the seven digit telephone number assigned to a customer's Telephone Exchange Service when dialed on a local basis.

Channel(s)

The term "Channel(s)" denotes an electrical or photonic, in the case of fiber optic-based transmission systems, communications path between two or more points of termination.

Channelize

The term "Channelize" denotes the process of multiplexing/demultiplexing wider bandwidth or higher speed channels into narrower band-width or lower speed channels.

2. General Regulations (Cont'd)

2.6 Definitions (Cont'd)

Coin Station

The term "Coin Station" denotes a location where Telephone Company equipment is provided in a public or semipublic place where Telephone Company customers can originate telephonic communications and pay the applicable charges by inserting coins into the equipment.

Common Line

The term "Common Line" denotes a line, trunk, pay telephone line or other facility provided under the general and/or local exchange service tariffs of the Telephone Company, terminated on a central office switch. A common line-residence is a line or trunk provided under the residence regulations of the general and/or local exchange service tariffs. A common line-business is a line provided under the business regulations of the general and/or local exchange service tariffs.

Communications System

The term "Communications System" denotes channels and other facilities which are capable of communications between terminal equipment provided by other than the Telephone Company.

Conversation Minutes

The term "Conversation Minutes" denotes the measurement of minutes beginning when either answer supervision or an off-hook supervisory signal is received from the terminating end user's end office and ending when either disconnect supervision or an on-hook supervisory signal is received from the terminating end user's end office, indicating the called party has disconnected.

Customer(s)

The term "Customer(s)" denotes any individual, partnership, association, joint-stock company, trust, corporation, or governmental entity or other entity which subscribes to the services offered under this tariff, including Interexchange Carriers (ICs), resellers or other entities engaged in the provisioning of Public Utility Common Carrier Services which utilize the network of The Telephone Company and who have been certified to provide such services by the New Hampshire Public Utility Commission, as described in Section 1.

2. General Regulations (Cont'd)

2.6 Definitions (Cont'd)

Decibel

The term "Decibel" denotes a unit used to express relative difference in power, usually between acoustic or electric signals, equal to ten (10) times the common logarithm of the ratio of two signal powers.

Decibel Reference Noise C-Message Weighting

The term "Decibel Reference Noise C-Message Weighting" denotes noise power measurements with C-Message weighting in decibels relative to a reference 1000 Hz tone of 90 dB below 1 milliwatt.

Decibel Reference Noise C-Message Referenced to 0

The term "Decibel Reference Noise C-Message Referenced to 0" denotes noise power in "Decibel Reference Noise C-Message Weighting" referred to or measured at a zero transmission level point.

Detail Billing

The term "Detail Billing" denotes the listing of each message and/or rate element for which charges to a customer are due on a bill prepared by the Telephone Company.

Directory Assistance

The term "Directory Assistance" denotes the provision of telephone numbers by a Telephone Company operator when the operator location is accessed by a customer by dialing (NPA) 555-1212.

Echo Path Loss

The term "Echo Path Loss" denotes the measure of reflected signal at a 4-wire point of termination without regard to the send and receive Transmission Level Point.

2. General Regulations (Cont'd)

2.6 Definitions (Cont'd)

Echo Return Loss

The term "Echo Return Loss" denotes a ~~frequency weighted measure of~~ return loss over the middle of the voiceband (approximately 500 to 2500 Hz), where talker echo is most annoying.

Effective 2-Wire

The term "Effective 2-Wire" denotes a condition which permits the simultaneous transmission in both directions over a channel, but it is not possible to insure independent information transmission in both directions. Effective 2-wire channels may be terminated with 2-wire or 4-wire interfaces.

Effective 4-Wire

The term "Effective 4-Wire" denotes a condition which permits the simultaneous independent transmission of information in both directions over a channel. The method of implementing effective 4-wire transmission is at the discretion of the Telephone Company (physical, time domain, frequency-domain separation or echo cancellation techniques). Effective 4-wire channels may be terminated with a 2-wire interface at the customer's premises. However, when terminated 2-wire, simultaneous independent transmission cannot be supported because the two wire interface combines the transmission paths into a single path.

End Office Switch

The term "End Office Switch" denotes a local Telephone Company switching system where Telephone Exchange Service customer station loops are terminated for purposes of interconnection to trunks. Included are Remote Switching Modules and Remote Switching Systems served by a host office in a different wire center.

End User

The term "End User" denotes any customer of an intrastate telecommunications service that is not a carrier, except that a carrier other than a telephone company shall be deemed to be an "End User" when such carrier uses a telecommunications service for administrative purposes and a person or entity that offers telecommunications services exclusively as a private reseller shall be deemed to be an "End User".

2. General Regulations (Cont'd)

2.6 Definitions (Cont'd)

Entry Switch

See First Point of Switching

Equal Level Echo Path Loss

The term "Equal Level Echo Path Loss" (ELEPL) denotes the measure of Echo Path Loss (EPL) at a 4-wire interface which is corrected by the difference between the send and receive Transmission Level Point (TLP) [ELEPL = EPL - TLP (send) + TLP (receive)].

Expected Measured Loss

The term "Expected Measured Loss" denotes a calculated loss which specifies the end-to-end 1004-Hz loss on a terminated test connection between two readily accessible manual or remote test points. It is the sum of the inserted connection loss and test access loss including any test pads.

Exchange

The term "Exchange" denotes a unit generally smaller than a Local Access and Transport Area, established by the Telephone Company for the administration of communications service in a specified area which usually embraces a city, town or village and its environs. It consists of one or more central offices together with the associated facilities used in furnishing communications service within that area. One or more designated exchanges comprise a given Local Access and Transport Area.

Field Identifier

The term "Field Identifier" denotes two to four characters that are used on service orders to convey specific instructions. Field Identifiers may or may not have associated data. Selected Field Identifiers are used in Telephone Company billing systems to generate nonrecurring charges.

2. General Regulations (Cont'd)

2.6 Definitions (Cont'd)

First Come - First Served

The term "First Come - First Served" denotes a procedure followed when a shortage of facilities or equipment occurs, such that an Access Service ordered cannot be installed. The orders delayed by the shortage of facilities will be prioritized according to the sequence in which they were received. That is, when facilities or equipment become available, the first order received will be the first order processed.

First Point of Switching

The term "First Point of Switching" denotes the first Telephone Company location at which switching occurs on the terminating path of a call proceeding from the customer's premises to the terminating end office and, at the same time, the last Telephone Company location at which switching occurs on the originating path of a call proceeding from the originating end office to the customer's premises.

Frequency Shift

The term "Frequency Shift" denotes the change in the frequency of a tone as it is transmitted over a channel.

Grandfathered

The term "Grandfathered" denotes Terminal Equipment, Multiline Terminating Systems and Protective Circuitry directly connected to the facilities utilized to provide services under the provisions of this tariff, and which are considered grandfathered under Part 68 of the F.C.C.'s Rules and Regulations.

Host Office

The term "Host Office" denotes an electronic switching system which provides call processing capabilities for one or more Remote Switching Modules or Remote Switching Systems.

Immediately Available Funds

The term "Immediately Available Funds" denotes a corporate or personal check drawn on a bank account and funds which are available for use by the receiving party on the same day on which they are received and include U.S. Federal Reserve bank wire transfers, U.S. Federal Reserve notes (paper cash), U.S. coins, U.S. Postal Money Orders and New York Certificates of Deposit.

2. General Regulations (Cont'd)

2.6 Definitions (Cont'd)

Impedance Balance

The term "Impedance Balance" denotes the method of expressing Echo Return Loss and Singing Return Loss at a 4-wire interface whereby the gains and/or loss of the 4-wire portion of the transmission path, including the hybrid, are not included in the specification.

Individual Case Basis

The term "Individual Case Basis" denotes a condition in which the regulations, if applicable, rates and charges for an offering under the provisions of this tariff are developed based on the circumstances in each case.

Inserted Connection Loss

The term "Inserted Connection Loss" denotes the 1004 Hz power difference (in dB) between the maximum power available at the originating end and the actual power reaching the terminating end through the inserted connection.

Interexchange Carrier (IC) or Interexchange Common Carrier

The terms "Interexchange Carrier" (IC) or "Interexchange Common Carrier" denotes any individual, partnership, association, joint-stock company, trust, governmental entity or corporation, other than the Telephone Company, authorized by the New Hampshire Public Utilities Commission. and engaged for hire in intrastate communications by wire or radio, between two or more exchanges.

2. General Regulations (Cont'd)

2.6 Definitions (Cont'd)

Interstate Communications

The term "Interstate Communications" denotes both interstate and foreign communications.

Intrastate Communications

The term "Intrastate Communications" denotes any communications within a state subject to oversight by a state regulatory commission as provided by the laws of the state involved.

Legal Holiday

The term "Legal Holiday" denotes days other than Saturday or Sunday on which the Telephone Company is normally closed. These include New Year's Day, Independence Day, Labor Day, Veteran's Day, Thanksgiving Day, Christmas Day and a day when Washington's Birthday, Memorial Day or Columbus Day is legally observed and other locally observed holidays when the Telephone Company is closed.

Line Side Connection

The term "Line Side Connection" denotes a connection of a transmission path to the line side of a local exchange switching system.

Local Access and Transport Area

The term "Local Access and Transport Area" denotes a geographic area established for the provision and administration of communications service. It encompasses one or more designated exchanges, which are grouped to serve common social, economic and other purposes.

Local Calling Area

The term "Local Calling Area" denotes a geographical area, as defined in NHPUC - No. 75 tariff, in which an end user (Telephone Exchange Service subscriber) may complete a call without incurring MTS charges.

Local Tandem Switch

The term "Local Tandem Switch" denotes a local Telephone Company switching unit by which local or access telephonic communications are switched to and from an End Office Switch.

2. General Regulations (Cont'd)

2.6 Definitions (Cont'd)

Loss Deviation

The term "Loss Deviation" denotes the variation of the actual loss from the designed value.

Major Fraction Thereof

The term "Major Fraction Thereof" is any period of time in excess of 1/2 of the stated amount of time. As an example, in considering a period of 24 hours, a major fraction thereof would be any period of time in excess of 12 hours exactly. Therefore, if a given service is interrupted for a period of thirty-six hours and fifteen minutes, the customer would be given a credit allowance for two twenty-four hour periods for a total of forty-eight hours.

Message

The term "Message" denotes a "call" as defined preceding.

Network Control Signaling

The term "Network Control Signaling" denotes the transmission of signals used in the telecommunications system which perform functions such as supervision (control, status, and charge signals), address signaling (e.g., dialing), calling and called number identifications, rate of flow, service selection error control and audible tone signals (call progress signals indicating re-order or busy conditions, alerting, coin denominations, coin collect and coin return tones) to control the operation of the telecommunications system.

2. General Regulations (Cont'd)

2.6 Definitions (Cont'd)

North American Numbering Plan

The term "North American Numbering Plan" denotes a three-digit area (Numbering Plan Area) code and a seven-digit telephone number made up of a three-digit Central Office code plus a four-digit station number.

Off-hook

The term "Off-hook" denotes the active condition of Switched Access or a Telephone Exchange Service line.

On-hook

The term "On-hook" denotes the idle condition of Switched Access or a Telephone Exchange Service line.

Operator Services Provider

The term "Operator Services Provider" denotes the interstate provider of operator services to which an end user placing an operator assisted call is connected when the end user's pre-subscribed Interexchange Carrier designates a provider of operator services to handle its operator traffic.

Originating Direction

The term "Originating Direction" denotes the use of Switched Access Service for the origination of calls from an end user premises to an IC premises.

Pay Telephone

The term "Pay Telephone" denotes Telephone Company provided instruments and related facilities that are available to the general public for public convenience and necessity, including public and semipublic telephones, and coinless telephones.

2. General Regulations (Cont'd)

2.6 Definitions (Cont'd)

Point of Termination

The term "Point of Termination" denotes the demarcation point or network interface, at which the Telephone Company's responsibility for the provision of Access Service ends. The point of demarcation or network interface is the point of interconnection between Telephone Company communications facilities and customer provided facilities as defined in Section 68.3 of the Federal Communications Commission's Rules and Regulations.

Premises

The term "Premises" denotes a building, or a portion of a building in a multitenant building, or buildings on continuous property (except Railroad Right-of-Way, etc.).

Remote Switching Modules and/or Remote Switching Systems

The term "Remote Switching Modules and/or Remote Switching Systems" denotes small, remotely controlled electronic end office switches which obtain their call processing capability from an ESS-type Host Office. The Remote Switching Modules and/or Remote Switching Systems cannot accommodate direct trunks to a customer.

Return Loss

The term "Return Loss" denotes a measure of the similarity between the two impedances at the junction of two transmission paths. The higher the return loss, the higher the similarity.

2. General Regulations (Cont'd)

2.6 Definitions (Cont'd)

Service Access Code

The term "Service Access Code" denotes a three digit code that takes the place of an NPA in the dialing sequence. Particular services provided by an IC, BOC or Independent Telephone Company, may include but are not limited to 700 (IC Services), 800 (800 Access Service) and 900 (National DIAL-IT network communications service). Service Access Codes are associated with Switched Access Services that may be ordered by an IC as part of the Access Services tariff. A Telephone Company may screen calls and route to an IC-specified point of presence based upon the SAC dialed.

Singing Return Loss

The term "Singing Return Loss" denotes the frequency weighted measure of return loss at the edges of the voiceband (200 to 500 Hz and 2500 to 3200 Hz), where singing (instability) problems are most likely to occur.

Subtending End Office of an Access Tandem

The term "Subtending End Office of an Access Tandem" denotes an end office that has final trunk group routing through that tandem.

Switching Systems

The term "Switching Systems" denotes the hardware and/or software utilized by the Telephone Company for the establishment and maintenance of a given central office.

2. General Regulations (Cont'd)

2.6 Definitions (Cont'd)

Terminating Direction

The term "Terminating Direction" denotes the use of Switched Access Service for the completion of calls from a customer premises to an End User premises.

Traffic Type

The term "Traffic Type" denotes three major types of traffic identified as: Originating, Terminating and Directory Assistance. Originating Traffic type represents access capacity within a LATA for carrying traffic from the end user to the customer. Terminating Traffic type represents access capacity within a LATA for carrying traffic from the customer to the end user. Directory Assistance traffic type represents access capacity within a LATA for carrying Directory Assistance traffic from the customer to a Directory Assistance location.

Transmission Path

The term "Transmission Path" denotes an electrical path capable of transmitting signals within the range of the service offering, e.g., a voice grade transmission path is capable of transmitting voice frequencies within the approximate range of 300 to 3000 Hz. A transmission path is comprised of physical or derived channels consisting of any form or configuration of facilities plant typically used in the telecommunications industry.

Trunk

The term "Trunk" denotes a transmission path connecting two switching systems in a network, used in the establishment of an end-to-end connection.

Trunk Group

The term "Trunk Group" denotes a set of trunks which are traffic engineered as a unit for the establishment of connections between switching systems in which all of the communications paths are interchangeable.

2. General Regulations (Cont'd)

2.6 Definitions (Cont'd)

Trunk-Side Connection

The term "Trunk-Side Connection" denotes the connection of a transmission path to the trunk side of a local exchange switching system.

Two-Wire to Four-Wire Conversion

The term "Two-Wire to Four-Wire Conversion" denotes an arrangement which converts a four-wire transmission path to a two-wire transmission path to allow a four-wire facility to terminate in a two-wire entity (e.g., a central office switch).

Uniform Service Order Code

The term "Uniform Service Order Code" denotes a three or five character alphabetic, numeric, or an alphanumeric code that identifies a specific item of service or equipment. Uniform Service Order Codes are used in the Telephone Company billing system to generate recurring rates and nonrecurring charges.

V and H Coordinates Method

The term "V and H Coordinates Method" denotes a method of computing airline miles between two points by utilizing an established formula which is based on the vertical and horizontal coordinates of the two points.

WATS Serving Office

The term "WATS Serving Office" denotes a telephone company designated serving wire center where switching, screening and/or recording functions are performed in connection with the closed end of WATS or WATS-type services.

Wire Center

The term "Wire Center" denotes a building in which one or more central offices, used for the provision of Telephone Exchange Services, are located.

3. Carrier Common Line Access Service (N)

The Telephone Company will provide Carrier Common Line Access Service to customers in conjunction with Switched Access Service provided in Section 6.

Carrier Common Line Access provides for the use of end users' Telephone Company provided common lines by customers for access to such end users to furnish Intrastate Communications.

Carrier Common Line Access also provides for the use of Switched Access Service terminating in 800 Access Line Service.

3.1 Limitations

3.1.1 Exclusions

Neither a telephone number nor detail billing are provided with Carrier Common Line Access. Additionally, directory listings and intercept arrangements are not included in the rates and charges for Carrier Common Line Access.

3.1.2 Access Groups

All trunk side connections provided in the same access group will be limited to the same features and operating characteristics.

All line side connections provided in the same access group will be limited to the same features and operating characteristics.

3.1.3 WATS Access Lines

Where Switched Access Services connect with private line type services at Telephone Company Designated WATS Serving Offices for provision of WATS or WATS-type Services, Switched Access Service minutes which are carried on that end of the service (i.e., originating minutes for outward WATS and WATS-type service and terminating minutes for inward WATS and WATS-type services) will be assessed Carrier Common Line Access per minute charges as set forth in Section 3.8. (N)

3. Carrier Common Line Access Service (Cont'd)

3.2 Undertaking of the Telephone Company

3.2.1 Provision of Service

Where the customer is provided with Switched Access Service under this tariff, the Telephone Company will provide the use of Telephone Company common lines by a customer for access to end users at rates and charges as set forth in Section 3.8.

3.2.2 Interstate and Intrastate Use

The Switched Access Service provided by the Telephone Company includes the Switched Access Service provided for both interstate and intrastate communications. The Common Carrier Line Access rates and charges as set forth in Section 3.8 apply to intrastate Switched Access Service access minutes in accordance with the rate regulations as set forth in Section 3.7.

3.3 Obligations of the Customer

3.3.1 Switched Access Service Requirement

The Switched Access Service associated with Carrier Common Line Access shall be ordered by the customer under other sections of this tariff.

3.3.2 Supervision

The customer facilities at the premises of the ordering customer shall provide the necessary on-hook and off-hook supervision.

3. Carrier Common Line Access Service (Cont'd)

3.4 Determination of Usage Subject to Carrier Common Line Access Charges

Except as set forth herein, all Switched Access Service provided to the customer will be subject to Carrier Common Line Access charges.

3.4.1 Determination of Jurisdiction

When the customer reports interstate and intrastate use of Switched Access Service, the associated Carrier Common Line Access used by the customer for both interstate and intrastate will be apportioned as set forth in Section 3.7.

3.4.2 Local Exchange Access and Enhanced Services Exemption

When access to the local exchange is required to provide a customer service (e.g., MTS-type, telex, Data, etc.) that uses resold IC's private line service, Switched Access Service Rates and Regulations, as set forth in Section 6 will apply except when such access to the local exchange is required for the provision of an enhanced service. Carrier Common Line Access rates and charges as set forth in Section 3.8.

3.5 Resold Services

3.5.1 Scope

Where the customer is reselling MTS and/or MTS-type service(s) on which the Carrier Common Line and Switched Access charges have been assessed, the customer will obtain Feature Groups A, B or D Switched Access Service as set forth in Section 6 for originating and/or terminating access in the local exchange. Such access group arrangements whether single trunks or trunk groups will have Carrier Common Line Access Charges applied as set forth in Section 3.8.

3. Carrier Common Line Access Service (Cont'd)

3.6 Coin Services

3.6.1 Collection and Remittance of Coin Station Monies

When the Customer is provided Operator Trunk-Full Feature for sent-paid pay telephone access as set forth in Section 6 following, the Telephone Company will collect sent-paid monies from pay telephone stations and will remit monies to the Customer as set forth in Section 3.6. The Telephone Company will provide the message call detail format and bill periods used to determine the monies upon request from the Customer.

3.6.2 Provision Of Message Call Detail Concerning Coin Station Monies

Where Operator Trunk-Full Feature for sent-paid pay telephone access is provided to the Customer and the Customer wishes to receive the monies it is due for the monies collected by the Telephone Company from coin pay telephone stations, the Customer will furnish to the Telephone Company, at a location specified by the Telephone Company, the Customer message call detail for the Customer sent-paid (coin) pay telephone calls in accordance with the Telephone Company collection schedule. The Customer message call detail furnished shall be in a standard format established by the Telephone Company. The Telephone Company will provide to the Customer the precise details of the required standard format. If, in the course of Telephone Company business, it is necessary to change the standard format, the Telephone Company will provide notification to the involved Customer six months prior to the change. If no Customer message call detail is received from the Customer for each bill period established by the Telephone Company, the Telephone Company will assume there were no Customer sent-paid (coin) pay telephone calls for the period. In addition the Customer shall furnish a schedule of its charges for sent-paid (coin) calls to the Telephone Company at a location and date as specified by the Telephone Company. Any change in the Customer's schedule of charges will be furnished to the Telephone Company one day after the change becomes effective.

3.6.3 Payment of Coin Sent-Paid Monies

The Telephone Company will collect the monies from coin pay telephone stations and will determine and remit amounts due to a Customer which is provided Operator Trunk-Full Feature for

3. Carrier Common Line Access Service (Cont'd)

3.6 Coin Services (Cont'd)

3.6.3 Payment of Coin Sent-Paid Monies (Cont'd)

sent-paid pay telephone access as set ~~forth in~~ Section 6 as follows:

(A) Bill Period Coin Revenue

The Telephone Company will establish a collection schedule for each coin pay telephone station and will collect the monies from the coin pay stations based on this collection schedule. The monies collected based on this schedule during each bill period established by the Telephone Company will be identified by coin pay telephone station and summed to develop the Bill Period Coin Revenue for each coin record day (i.e., the day a record is prepared and dated to show the amount due the Customer).

(B) Total Customer Coin Revenue

The intrastate Total Customer Coin Revenue will be determined by the Telephone Company based on the customer message call detail received from the customer for each bill period and the Customer's schedule of charges for sent-paid coin calls. Such Total Customer Coin Revenue will be developed each coin record day.

(C) Recourse Adjustments

For each coin record day, the Telephone Company will subtract from the Total Customer Coin Revenue an amount for coin station shortages. Coin station shortages are amounts resulting from unauthorized calling at coin pay telephone stations, use of unauthorized coins (i.e., foreign coins, slugs and improper use of U.S. pennies), unauthorized removal of coins from coin pay telephone stations and coin refunds beyond the Telephone Company's control. Such amount for coin station shortages will be developed by the Telephone Company by multiplying the Total Customer Coin Revenue for each coin record day by a shortage factor. Such amount will be rounded to the nearest penny. The shortage factor will be determined by dividing the yearly total coin shortage amount by the yearly total coin revenue amount (i.e., total coin revenue equals the coin revenue due under exchange tariffs, state toll tariffs, and interstate toll tariffs). The total coin shortage amount and the total revenue amount will be determined by the Telephone Company through an annual special study.

3. Carrier Common Line Access Service (Cont'd)

3.6 Coin Services (Cont'd)

3.6.3 Payment of Coin Sent-Paid Monies (Cont'd)

(D) Payment of Net Customer Coin Revenue

The Telephone Company will determine the Net Customer Coin Revenue for each coin record day by subtracting from the Total Customer Coin Revenue determined as set forth in (B) preceding the amount for coin station shortages determined as set forth in (C) preceding. On the date (payment date) determined by adding 45 days to the coin record day, the Telephone Company will remit payment to the Customer for the Net Customer Coin Revenue.

(E) Audit Provisions

Upon reasonable written notice by the Customer to the Telephone Company, the Customer will have the right through its authorized representative to examine and audit, during normal business hours and at reasonable intervals as determined by the Telephone Company, all such records and accounts as may under recognized accounting practices contain information bearing upon the determination of the amount payable to the Customer. Adjustment will be made by the proper party to compensate for any errors or omissions disclosed by such examination or audit. Neither such right to examine and audit nor the right to receive such adjustment shall be affected by any statement to the contrary, appearing on checks or otherwise, unless such statement expressly waiving such right appears in a letter signed by the authorized representative of the party having such right and delivered to the other party.

All information received or reviewed by the Customer or its authorized representative is to be considered confidential and is not to be distributed, provided or disclosed in any form to anyone not involved in the audit, nor is such information to be used for any other purpose.

3. Carrier Common Line Access Service (Cont'd)

3.7 Rate Regulations

3.7.1 Billing Of Charges

Unless otherwise specified in Section 3.7.4, the Carrier Common Line Access Charges will be billed to each Switched Access Service provided under this tariff in accordance with the regulations as set forth in Sections 2.4 and 3.7.5.

3.7.2 Measuring and Recording Of Call Detail

When access minutes are used to determine Carrier Common Line charges, they will be accumulated using call detail recorded by Telephone Company equipment except as set forth in Section 3.7.3. The Telephone Company measuring and recording equipment except as set forth in Section 3.7.3 will be associated with end office or local tandem switching equipment and will record originating access minutes and terminating access minutes where answer supervision is received. The accumulated access minutes will be summed on a line by line basis, by line group or end office, whichever type of account is used by the Telephone Company, for each customer and then rounded to the nearest minute.

3.7.3 Unmeasured Feature Group B Usage

When Carrier Common Line Access is provided in association with Feature Groups A or B Switched Access Service in Telephone Company offices that are not equipped for measurement capabilities, assumed average intrastate access minutes will be used to determine Carrier Common Line Access charges. The assumed access minutes are as set forth in Section 6.7.6.

3.7.4 Percent Interstate Use (PIU)

When the customer reports interstate and intrastate use of Switched Access Service, the Carrier Common Line Access access minutes will be adjusted as follows. The Carrier Common Line Access minutes, developed by the Telephone Company, will be multiplied by the percentages reported by the customer as set forth in Section 2.3.10. The result will be used to determine the Carrier Common Line Charges as set forth in Section 3.7.5.

3. Carrier Common Line Access Service (Cont'd)

3.7 Rate Regulations (Cont'd)

3.7.5 Determination of Charges

After the adjustments as set forth in Section 3.7.4 have been applied, when necessary, to the Carrier Common Line access minutes, the charges for the involved customer account will be determined as follows:

(A) The access minutes for all Switched Access Service subject to Carrier Common Line charges will be multiplied by the per minute rate as set forth in Section 3.8 to determine the charges.

(B) The Terminating Switched Access per minute charges specified in Section 3.8(A) apply to all non-800 Access terminating access minutes of use. The Terminating Switched Access per minute charges specified in Section 3.8(A) also apply to all terminating 800 Access minutes of use which terminate on a common line. The number of such minutes will be obtained from reports furnished by the customer as specified in Section 2.3.10.

(C) The Terminating 800 Access Service per minute charge(s) as specified in Section 3.8(B), apply to all 800 terminating usage which terminates in a WATS Access Line Service as provided from NYNEX TARIFF F.C.C. No. 1. The number of such minutes will be obtained from reports furnished by the customer as specified in Section 2.3.10.

(D) The Originating Switched Access per minute charge(s) set forth in Section 3.8(A), apply to all non-800 originating access minutes of use less those originating access minutes of use associated with FGA Access Services where the off-hook supervisory signaling is forwarded by the customer's equipment when the called party answers.

(E) The Originating 800-specific Access per minute charge(s) set forth in Section 3.8(B) apply to all originating access minutes of use associated with calls placed to 800 numbers. The Originating 800-specific Access per minute charge(s) also apply to all originating usage which terminates in WATS Access Line Service as provided from NYNEX TARIFF F.C.C. No. 1. The number of such minutes will be obtained from reports furnished by the customer as set forth in Section 2.3.10.

3. Carrier Common Line Access Service (Cont'd)

3.8 Rates and Charges

		- - - RATE - - - Per Access Minute
(A)	Switched Access Service	
	(1) Terminating	$ 0.036280
	(2) Originating	0.116280
(B)	800 Access Service	
	(1) Terminating	0.095703
	(2) Originating	0.035703

4. RESERVED FOR FUTURE USE

Material previously on this page now appears in Section 6.

4. RESERVED FOR FUTURE USE

Material previously on this page now appears in Section 6.

4. RESERVED FOR FUTURE USE

Material previously on this page now appears in Section 6.

4. RESERVED FOR FUTURE USE

Material previously on this page now appears in Section 6.

4. RESERVED FOR FUTURE USE

Material previously on this page now appears in Section 6.

5. Ordering Provisions for Switched Access Service (X)

Regulations, rates and charges for ordering provisions applicable to Switched Access Service offered under this tariff are the same as those set forth in NYNEX TARIFF F.C.C. No. 1 Section 5. (X)

(X) This material previously appeared in Section 3.
Material previously in this section now appears in Section 13.

6. Switched Access Service

6.1 General

The Switched Access Services provided under this tariff are as follows: (a) originating, terminating or two-way Feature Groups A, B & D and (b) 800 Access Service. In addition to regulations which are contained within this Tariff, other regulations pertinent to these services are the same as those specified in Section 6 of NYNEX TARIFF F.C.C. No. 1, as appropriate, unless otherwise stated in this Tariff.

6.1.1 Rate Categories

There are three rate elements categories which apply to Switched Access Service:

- Local Transport
- Local Switching
- Carrier Common Line

The following diagram depicts a generic view of the components of Switched Access Service and the manner in which the components are combined to provide a complete Access Service:

Material previously on this page now appears in Section 15.

6. Switched Access Service (Cont'd)

6.1 General (Cont'd)

6.1.1 Rate Categories (Cont'd)

(A) Local Transport

The Local Transport rate category provides the transmission facilities between the customer's premises and the end office switch(es) where the customer's traffic is switched to originate or terminate its communications. For purposes of determining Local Transport mileage, distance will be measured from the wire center that normally serves the customer to the end office switch(es). Exceptions to the mileage measurement rules are set forth in Section 6.7.11.

Local Transport is a two-way voice frequency transmission path composed of facilities determined by the Telephone Company. The two-way voice frequency transmission path permits the transport of calls in the originating direction (from the end user end office switch to the customer's premises) and in the terminating direction (from the customer's premises to the end office switch), but not simultaneously. The voice frequency transmission path may be comprised of any form or configuration of plant capable of and typically used in the telecommunications industry for the transmission of voice and associated telephone signals within the frequency bandwidth of approximately 300 to 3000 Hz.

The Telephone Company will work cooperatively with the customer in determining (1) whether the service is to be directly routed to an end office switch or through an access tandem switch, (2) routed through a TOPS tandem switch and (3) the directionality of the service.

The Local Transport rate category is comprised of a Local Transport Termination rate, a Local Transport Facility rate and, when applicable, an Operator Passthrough Charge. The Local Transport Termination rate provides for that portion of the voice frequency transmission path at the end office switch, and at the customer's premises.

The Local Transport Facility rate provides for that portion of the voice frequency transmission path between the end office switch and the customer's premises. Local Transport is provided at the rates and charges set forth in Section 6.8.1. The application of these rates is as set forth in Section 6.7.1.

6. Switched Access Service (Cont'd)

6.1 General (Cont'd)

6.1.1 Rate Categories (Cont'd)
(A) Local Transport (Cont'd)

The Telephone Company will provide end users with access to the operators of a customer for operator assisted call completion as desired. If the customer provides operator services for its end users for calls originating from within the LATA and is capable of receiving calls passed through to it in the LATA by the Telephone Company, the customer will be assessed an Operator Passthrough Charge that will include the costs associated with handling the operator services traffic. The Operator Passthrough Charge for customers providing operator services is set forth in Section 6.8.1.(D).

Notwithstanding the first paragraph of this section, the Local Transport mileage for access minutes which originate (i.e., FGD) from or terminate (i.e., FGB and FGD) to a WATS Access Line Service when such service is ordered and provisioned under NYNEX TARIFF F.C.C. No. 1, Section 7, will be calculated on an airline basis, using the V&H Coordinates method, between the WATS Serving Office at which the WATS Access Line Service terminates and the customer premises serving wire center for the FGB or FGD Switched Access Service provided. The V&H Coordinate method is set forth in NATIONAL EXCHANGE CARRIER ASSOCIATION INC, TARIFF F.C.C. No. 4 for Wire Center and Interconnection Information.

When FGB usage originating from or terminating to a WATS Access Line Service (when the WATS Access Line Service is ordered and provisioned under NYNEX TARIFF F.C.C. No. 1, Section 7) is transported over a FGB trunk for which assumed minutes of use are billed, the Local Transport mileage for such usage will be calculated in accordance with the V&H Coordinates method.

(1) Interface Groups

Descriptions as well as regulations pertaining to Interface Groups which are applicable to the Switched Access Feature Groups offered under this tariff are the same as those set forth in NYNEX TARIFF F.C.C. No. 1, Section 6.1.3 (A)(1).

(2) Optional Features

Where transmission facilities permit, the Telephone Company will, at the option of the customer provide the following nonchargeable optional features in association with Local Transport:

6.1 General (Cont'd)

6.1.1 Rate Categories (Cont'd)

(A) Local Transport (Cont'd)
(2) Optional Features (Cont'd)

(a) Supervisory Signaling

Where the transmission parameters permit, and where signaling conversion is required by the customer to meet its signaling capability, the customer may order an optional supervisory signaling arrangement for each transmission path provided as follows:

- For Interface Groups 1 & 2
  - DX Supervisory Signaling, E&M Type I Supervisory Signaling, E&M Type II Supervisory Signaling or E&M Type III Supervisory Signaling.

- For Interface Group 2
  - SF Supervisory Signaling or Tandem Supervisory Signaling

- For Interface Groups 6, 7 & 9
  - These Interface Groups may, at the option of the customer, be provided with individual transmission path SF supervisory signaling where such signaling is available in Telephone Company central offices. Generally such signaling is available only where the entry switch provides an analog, i.e., non-digital interface to the transport termination and a portion of the facility between the analog entry switch and the customer's premises is analog.

(b) Customer Specified Entry Switch Receive Level

This feature allows the customer to specify the receive transmission level at the first point of switching. The range of transmission levels which may be specified is described in TR-NWT-000334. This feature is available with Interface Groups 2, 6, 7 and 9 for Feature Groups A and B.

(c) Customer Specification of Local Transport Termination

This option allows the customer to specify, for Feature Group B routed directly to an end office or access tandem, a four-wire termination of the Local Transport at the entry switch in lieu of a Telephone Company selected two-wire termination. This option is available only when the FGB arrangement is provided with Type B Transmission Specifications.

6. Switched Access Service (Cont'd)

6.1 General (Cont'd)

6.1.1 Rate Categories (Cont'd)

(B) Local Switching

The Local Switching rate category provides for the use of common lines and the local end office switching and end user termination functions necessary to complete the transmission of Switched Access communications to the end users served by the local end office. The Local Switching functions are Local Access, Line Termination and Intercept. They are described as follows:

(1) Local Access

The Local Access function provides for the use of end office switching equipment.

There are two types of Local Access functions, i.e., Common Switching and Transport Termination. These are described as follows:

(a) Common Switching

Common Switching provides the local end office switching functions associated with the various access (i.e., Feature Group) switching arrangements. The Common Switching arrangements provided for originating, terminating or two-way Feature Groups A, B and D are as set forth in Section 6.2.

Included as part of Common Switching are optional features which the Customer can order to meet the Customer's specific communications requirements. Optional features appropriate to Switched Access Services offered under this Tariff are as set forth Section 6.3.

6. Switched Access Service (Cont'd)

6.1 General (Cont'd)

6.1.1 Rate Categories (Cont'd)

(B) Local Switching (Cont'd)

(1) Local Access (Cont'd)

(b) Transport Termination

Transport Termination provides for the line or trunk side arrangements which terminate the Local Transport facilities. Included as part of Transport Termination are various nonchargeable optional termination arrangements. These optional terminating arrangements are as set forth in Section 6.3.

The number of Transport Terminations provided will be determined by the Telephone Company as set forth in NYNEX TARIFF F.C.C. No. 1 Section 6.5.6.

(c) Optional Features

Appropriate Common Switching Optional Features and Transport Termination Optional Features relative to the Switched Access Service offered under this tariff are as set forth in Section 6.3.

(2) Line Termination

The Line Termination function provides the terminations for the end user lines terminating in the local end office.

(3) Intercept

The Intercept function provides for the termination of a call at a Telephone Company Intercept operator or recording. The operator or recording tells a caller why a call, as dialed, could not be completed, and if possible, provides the correct number.

6.1.2 Special Facilities Routing

Any customer may request that the facilities used to provide Switched Access Service be specially routed. The regulations rates and charges for Special Facilities Routing (i.e., Avoidance, Diversity and Cable-Only) are set forth in Section 11.

6. Switched Access Service (Cont'd)

6.1 General (Cont'd)

6.1.3 Design Layout Report

At the request of the customer, the Telephone Company will provide to the customer the makeup of the facilities and services provided from the customer's premises to the first point of switching. This information will be provided in the form of a Design Layout Report. The Design Layout Report will be provided to the customer at no charge, and will be reissued or updated whenever these facilities are materially changed.

6.1.4 Acceptance Testing

At no additional charge, the Telephone Company will, at the customer's request cooperatively test, at the time of installation, the following parameters: loss, C-message noise, 3-tone slope, d.c. continuity and operational signaling. When the Local Transport is provided with Interface Groups 2, 6, 7 and 9 and the Transport Termination is two-wire (i.e., there is a four-wire to two-wire conversion in Local Transport), balance parameters (equal level echo path loss) may also be tested.

6.1.5 Ordering Options and Conditions

When ordered under this Tariff, Switched Access Service(s) is provided to the Customer under the same Order Options and Conditions that are set forth in NYNEX TARIFF F.C.C. No. 1, Section 5 and 6.1.7.

6.2 Provision and Description of Switched Access Feature Groups

Regulations pertaining to the provision of Switched Access Feature Groups provided under this Tariff are the same as those set forth in NYNEX TARIFF F.C.C. No. 1, Section 6.2. In addition a WATS Access Line Service, when ordered from NYNEX TARIFF F.C.C. No. 1, Section 7 may at the option of the customer be provided for use with Feature Groups B and D.

6.3 Local Switching Optional Features

Following are descriptions of the various optional features that are available in lieu of, or in addition to, the standard features provided with the Feature Groups. They are provided as either Common Switching, Transport Termination or WATS Access Line Service Termination Options.

6. Switched Access Service (Cont'd)

6.3 Local Switching Optional Features (Cont'd)

6.3.1 Common Switching

(A) Call Denial on Line or Hunt Group

This option allows for the screening of terminating calls within the LATA, and for the completion only of calls to 411, 911, 800 555-1212, and a Telephone Company specified set of NXXs within the Telephone Company local exchange calling area of the dial tone office in which the arrangement is provided. All other "toll" calls are routed to a reorder tone or recorded announcement. This feature is provided in all Telephone Company electronic end offices and, where available, in electromechanical end offices. It is available with Feature Group A.

(B) Service Code Denial on Line or Hunt Group

This option allows for the screening of terminating calls within the LATA, and for disallowing completion of calls to 0- and N11. This feature is provided, where available, in all Telephone Company electronic end offices and electromechanical end offices. It is available with Feature Group A.

(C) Hunt Group Arrangement

This option provides the ability to sequentially access one of two or more line side connections in the originating direction, when the access code of the line group is dialed. This feature is provided in all Telephone Company end offices. It is available with Feature Group A. Additionally, FGA Services provided by multiple customers to the same end user may not be combined in a single hunt group unless the Local Transport Facility mileage is the same for each customer, i.e., the distance between each customer's serving wire center and the first point of switching (dial tone office) to which the FGA Services are ordered is the same.

(D) Uniform Call Distribution Arrangement

This option provides a type of multiline hunting arrangement which provides for an even distribution of calls among the available lines in a hunt group. Where available, this feature is provided in Telephone Company electronic end offices only. It is available with Feature Group A.

6. Switched Access Service (Cont'd)

6.3 Local Switching Optional Features (Cont'd)

6.3.1 Common Switching (Cont'd)

(E) Nonhunting Number for Use with Hunt Group or Uniform Call Distribution Arrangement

This option provides an arrangement for an individual line within a multiline hunt or uniform call distribution group that provides access to that line within the hunt or uniform call distribution group when it is idle or provides busy tone when it is busy, when the nonhunting number is dialed. Where available, this feature is provided in Telephone Company electronic end offices only. It is available with Feature Group A.

(F) Automatic Number Identification (ANI)

This option provides the automatic transmission of a seven or ten digit number and information digits to the customer's premises for calls originating in the LATA, to identify the calling station. The ANI feature is an end office software function which is associated on a call-by-call basis with (1) all individual transmission paths in a trunk group routed directly between an end office and a customer's premises or, where technically feasible, with (2) all individual transmission paths in a trunk group between an end office and an access tandem, and a trunk group between an access tandem and a customer's premises.

The seven digit ANI telephone number is available with Feature Group B. With this Feature Group, technical limitations may exist in Telephone Company switching facilities which require ANI to be provided only on a directly trunked basis. ANI will be transmitted on all calls except those originating from multiparty lines, coin stations and coinless pay telephones using Feature Group B, or when an ANI failure has occurred.

The ten digit ANI telephone number is only available with Feature Group D. The ten digit ANI telephone number consists of the Numbering Plan Area (NPA) plus the seven digit ANI telephone number. The ten digit ANI telephone number will be transmitted on all calls except those identified as multiparty line or ANI failure, in which case only the NPA will be transmitted (in addition to the information digit described in the following paragraph).

6. Switched Access Service (Cont'd)

6.3 Local Switching Optional Features (Cont'd)

6.3.1 Common Switching (Cont'd)

(F) Automatic Number Identification (ANI) (Cont'd)

Where ANI cannot be provided, e.g., on calls from 4 and 8 party services, information digits will be provided to the customer.

The information digits identify: (1) telephone number is the station billing number - no special treatment required, (2) multiparty line - telephone number is a 4- or 8-party line and cannot be identified - number must be obtained via an operator or in some other manner, (3) ANI failure has occurred in the end office switch which prevents identification of calling telephone number - must be obtained by operator or in some other manner, (4) hotel/motel originated call which requires room number identification, (5) coinless station, hospital, inmate, etc. call which requires special screening or handling by the customer, and (6) call is an Automatic Identified Outward Dialed (AIOD) call from customer premises equipment. The ANI telephone number is the listed telephone number of the customer and is not the telephone number of the calling party.

These ANI information digits are available with Feature Groups B and D.

ANI is provided as a nonchargeable option with Feature Groups B and D.

Additional ANI information digits are available with Feature Group D only. They include:

1) InterLATA restricted - telephone number is identified line

2) InterLATA restricted - hotel/motel line

3) InterLATA restricted - coinless, hospital, inmate, etc., line

These information digits will be transmitted as agreed to by the customer and the Telephone Company.

6. Switched Access Service (Cont'd)
6.3 Local Switching Optional Features (Cont'd)

6.3.1 Common Switching (Cont'd)

(G) Up to 7 Digit Outpulsing of Access Digits to Customer

This option provides for the end office capability of providing up to 7 digits of the uniform access code (950-0XXX or 950-1XXX) to the customer premises. The customer can request that only some of the digits in the access code be forwarded. The access code digits would be provided to the customer's premises using multi-frequency signaling, and transmission of the digits would precede the forwarding of ANI if that feature were provided. It is available as a nonchargeable option with Feature Group B.

(H) Service Class Routing

This option provides the capability of directing originating traffic from an end office to a trunk group to a customer designated premises, based on the line class of service (e.g., coin, multiparty or hotel/motel), service prefix indicator (e.g., 0- or 0+) or service access code (e.g., 800). It is provided in suitably equipped end office or access tandem switches and is available as a nonchargeable option with FGD.

(I) Alternate Traffic Routing

(1) Multiple Customer Premises Alternate Routing

This option provides the capability of directing originating traffic from an end office (or appropriately equipped access tandem) to a trunk group (the "high usage" group) to a customer designated premises until that group is fully loaded, and then delivering additional originating traffic (the "overflowing" traffic) from the same end office or access tandem to a different trunk group (the "final" group) to a second customer designated premises. The customer shall specify the last trunk CCS desired for the high usage group. It is provided in suitably equipped end office or access tandem switches and is available as a nonchargeable option with Feature Groups B and D.

(2) End Office Alternate Routing When Ordered in Trunks

This option provides an alternate routing arrangement for customers who order in trunks and have access for a particular Feature Group to an end office via two routes: one route via an access tandem and one direct route. The feature allows the customer's originating traffic from the end office to be offered first to the direct trunk group and then overflow to the access tandem group. It is provided in suitably equipped end offices and is available as a nonchargeable option with Feature Groups B and D. It is not available with FGD provided from designated electromechanical end offices.

6. Switched Access Service (Cont'd)

6.3 Local Switching Optional Features (Cont'd)

6.3.1 Common Switching (Cont'd)

(J) Band Advance Arrangement for Use with WATS Access Line Service

This option, which is provided in association with two or more WATS Access Line Service groups, provides for the automatic overflow of terminating calls to a WATS Access Line Service group, when that group has exceeded its call capacity, to another WATS Access Line Service group with a band designation equal to or greater than that of the overflowing WATS Access Line Service group. This arrangement does not provide for call overflow from a group with a higher band designation to one with a lower one. This option is available as a nonchargeable option with Feature Group D.

(K) End Office End User Line Service Screening for Use with WATS Access Line Service

This option provides the ability to verify that a customer has dialed a called party address (by screening the called NPA and/or NXX on the basis of geographical bands selected by the Telephone Company) which is in accordance with that end user's service agreement with the customer, i.e., WATS. This option is provided in all Telephone Company electronic end offices and, where available, in electromechanical end offices in which WATS Access Line Service is provided. It is available as a nonchargeable option with Feature Group D.

(L) Hunt Group Arrangement for Use with WATS Access Line Service

This option provides the ability to sequentially access one of two or more WATS Access Line Services (i.e., 800 Service access lines) in the terminating direction, when the hunting number of the WATS Access Line Service group is forwarded from the customer to the Telephone Company. This feature is provided in all Telephone Company end offices in which WATS Access Line Service is provided. It is available as a nonchargeable option with Feature Groups B and D.

(M) Uniform Call Distribution Arrangement for Use with WATS Access Line Service

This option provides a type of multiline hunting arrangement which provides for an even distribution of terminating calls among the available WATS Access Line Services in the hunt group. Where available, this feature is only provided in Telephone Company electronic end offices in which WATS Access Line Service is provided. It is available as a nonchargeable option with Feature Groups B and D.

6. Switched Access Service (Cont'd)

6.3 Local Switching Optional Features (Cont'd)

6.3.1 Common Switching (Cont'd)

(N) Nonhunting Number for Use with Hunt Group Arrangement or Uniform Call Distribution Arrangement for Use with WATS Access Line Service

This option provides an arrangement for an individual WATS Access Line Service within a multiline hunt or uniform call distribution group that provides access to those WATS Access Line Services within the hunt or uniform call distribution group when it is idle or provides busy tone when it is busy, when the nonhunting number is dialed. Where available, this feature is only provided in Telephone Company electronic end offices in which WATS Access Line Service is provided. It is available as a nonchargeable option with Feature Groups B and D.

(O) Routing of IntraLATA Calls to the Telephone Company for Use with WATS Access Line service

This option, which is available with either, originating only WATS Access Line (WAL) Service not equipped with the End Office End User Line Service Screening optional feature, or with two-way WAL Service, provides that intraLATA calls originating over such services by the end user's dialing valid NXX codes in the LATA, time or weather announcement services of the Telephone Company, community information services of an information service provider, local operator assistance (0- and 0+), service codes (611 and 911), and directory assistance (411, 555-1212, and NPA + 555-1212) will be routed to the facilities of the Telephone Company for completion. Calls placed by the end user's dialing the 950-0XXX or 950-1XXX will be directed to the Feature Group B Switched Access Service customer. Additionally, this option provides that interLATA calls originating from such services by the end user's dialing 0- will be directed to the Feature Group D Switched Access Service of the customer providing the interLATA operator services. This option is available as a nonchargeable option with Feature Group D.

6. Switched Access Service (Cont'd)

6.3 Local Switching Optional Features (Cont'd)
6.3.2 Transport Termination

(A) Rotary Dial Station Signaling

This option provides for the transmission of called party address signaling from rotary dial stations to the customer's premises for originating calls. This option is provided in the form of a specific type of Transport Termination. It is available as a nonchargeable option with Feature Group B, only on a directly trunked basis.

(B) Operator Trunk - Full Feature

This option provides the operator functions available in the end office to the customer's operator for interLATA use. These functions are (1) Operator Released, (2) Operator Attached, (3) Coin Collect, (4) Coin Return and (5) Ringback. It is available with Feature Group D and is provided as a trunk type of Transport Termination.

(C) Operator Trunk - Assist Feature

This option provides the operator functions available in the end office to the customer's operator. These functions are (1) Operator Released and (2) Operator Attached. It is available with Feature Group D and is provided as a trunk type of Transport Termination.

6.3.3 WATS Access Line Service Termination

(A) E&M Supervisory Signaling

The E&M Supervisory Signaling optional feature, which is available with four-wire originating, terminating and two-way only WATS Access Line Service, for use with FGB and FGD Switched Access Service provides for E&M Type 1, Type 2 or Type 3 Supervisory Signaling. When E&M Supervisory Signaling is provided, Answer Supervision is also provided for originating traffic.

(B) Answer Supervision

The WATS Answer Supervision optional feature, which is available with originating only two-wire WATS Access Line Service for use with FGB and FGD Switched Access Service provides equipment at the end user premises that indicates that the called end user has answered, when such indication is provided by the interexchange carrier. When Answer Supervision is provided with a two-wire WATS Access Line Service, reverse battery type supervisory signaling is also provided.

6. Switched Access Service (Cont'd)

6.4 Transmission Specifications

The available transmission specifications for Switched Access Service Arrangements offered under this Tariff are the same as those stated in NYNEX TARIFF F.C.C. No. 1, Section 6.4.

6.5 Obligations of the Telephone Company

In addition to the obligations of the Telephone Company as set forth in Section 2, the Telephone Company has certain other obligations pertaining only to the provision of the Switched Access Service Arrangements offered under this Tariff. Those obligations are the same as those set forth in NYNEX TARIFF F.C.C. No. 1, Section 6.5.

6.6 Obligations of the Customer

In addition to the obligations of the Customer as set forth in Section 2, the Customer has certain specific obligations pertaining to the use of the Switched Access Service Arrangements offered under this Tariff. Those obligations are as follows:

6.6.1 Report Requirements

(A) Jurisdictional Reports

Obligations of the Customer pertaining to Jurisdictional Reports are as set forth in Section 2.

(B) Code Screening Reports

When a customer orders service class routing, it will report the number of trunks and/or the appropriate codes to be instituted in each end office or access tandem switch, for each of the arrangements ordered.

(C) 800 NXX Code Reports

When a customer orders 800 Access Service, it will report the appropriate NXX codes which will be instituted in each access tandem or end office switch at which the customer identification function is performed. The customer will update the report each time a change occurs, i.e., when a new code is added or an existing code is deleted.

6.6.2 Supervisory Signaling

The customer's facilities will provide the necessary on-hook, off-hook, answer and disconnect supervision.

6. Switched Access Service (Cont'd)

6.6 Obligations of the Customer (Cont'd)

6.6.3 Trunk Group Measurement Reports

With the agreement of the customer, trunk group data in the form of usage in CCS, peg count and overflow for its end of all access trunk groups, where technologically feasible, will be made available to the Telephone Company. These data will be used to monitor trunk group utilization and service performance and will be based on previously arranged intervals and format.

6.6.4 Design of Switched Access Services

When a customer orders Switched Access Service on a per trunk basis, the customer will take reasonable steps to assure that sufficient access services have been ordered to handle its traffic.

6. Switched Access Service (Cont'd)

6.7 Rate Regulations

6.7.1 Description and Application of Rates and Charges

There are three types of rates and charges that apply to Switched Access Service. These are monthly rates, usage rates and nonrecurring charges. Monthly rates and nonrecurring charges are applied as set forth below in (A) and (C).

(A) Monthly Rates

Monthly rates are flat recurring rates that apply each month or fraction thereof that a chargeable optional feature is provided. For billing purposes, each month is considered to have 30 days.

(B) Usage Rates

Usage rates are rates that apply only when a specific rate element is used. These are applied on a per access minute basis or a per call basis. Usage rates are accumulated over a monthly period. Usage rates applied on a per access minute basis are applied differently to the various rate elements as set forth in (D) below.

(C) Nonrecurring Charges

Nonrecurring charges are one-time charges that apply for a specific work activity (i.e., installation or change to an existing service). The types of nonrecurring charges that apply for Switched Access Service are: installation of service, installation of optional features or basic service elements, and service rearrangements.

(1) Installation of Service

Local Transport and Local Switching Nonrecurring charges apply to each Switched Access Service installed. For Switched Access Service ordered on a per line or trunk basis the charge is applied per line or trunk.

For Switched Access Service ordered on a busy hour minutes of capacity basis, the charges are also applied on a per trunk basis but the charges apply only when the capacity ordered requires the installation of an additional trunk(s).

6. Switched Access Service (Cont'd)

6.7 Rate Regulations (Cont'd)

6.7.1 Description and Application of Rates and Charges (Cont'd)

(C) Nonrecurring Charges (Cont'd)

(2) Installation of Optional Features

If a separate nonrecurring charge applies for the installation of an optional feature, the charge applies whether the feature is installed coincident with the initial installation of service or at any time subsequent to the initial installation of service.

For optional features without separate nonrecurring charges, the Local Switching nonrecurring charge will apply when the optional features are ordered subsequent to the installation.

(3) Service Rearrangements

Service rearrangements are changes to existing (installed) services which do not result in either a change in the minimum period requirements or a change in the physical location of the point of termination at a customer's premises or a customer's end user's premises. The minimum period requirement for services offered in this tariff is specified in Section 2.4.2. Service rearrangements which are considered to result in a change in the minimum service period are as set forth in NYNEX TARIFF F.C.C. No. 1, Section 5. Changes which result in the establishment of new minimum period obligations are treated as discontinuances of existing service and installations of new service. Changes in the physical location of the point of termination are treated as moves and are described and charged for as set forth in Section 6.7.5.

The charge to the customer for the service rearrangement is dependent on whether the change is administrative only in nature or involved an actual physical change to the service.

Administrative changes as follows, will be made without charge(s) to the customer:

- Change of Customer name;
- Change of customer or customer's end user premises address when the change of address is not a result of a physical relocation of equipment;

6. Switched Access Service (Cont'd)

6.7 Rate Regulations (Cont'd)

6.7.1 Description and Application of Rates and Charges (Cont'd)

(C) Nonrecurring Charges (Cont'd)

(3) Service Rearrangements (Cont'd)

- Change in billing data (name, address, or contact name or telephone number);
- Change of agency authorization;
- Change of customer circuit identification;
- Change of billing account number;
- Change of customer test line number;
- Change of customer or customer's end user contact name or telephone number; and
- Change of jurisdiction.
- If, due to network considerations of the Telephone Company, it was impossible to combine 800 Access Service traffic with a customer's other trunk side Switched Access Services, no charge shall be applied to combine the trunk groups when it becomes possible.

All other service rearrangements will be charged for as follows:

- If the change involves the addition of an optional feature which has a separate nonrecurring charge, that nonrecurring charge will apply.

- If the change involves rearrangement of a customer's FGD Access Service from direct routed to tandem routed, no charge shall apply for the customer requested rearrangement as long as the following conditions are met:

  - Tandem routed access was not available to the end office at the time the end office was converted to an equal access office;
  - The customer was providing service in the relevant area prior to the availability of tandem routed access;
  - The customer requested the rearrangement of its trunks from direct routed access to tandem routed access within six months of the first availability of tandem routed access in that area; and
  - The customer orders, as tandem routed, the equivalent capacity to replace the direct routed trunks.

6. Switched Access Service (Cont'd)

6.7 Rate Regulations (Cont'd)

6.7.1 Description and Application of Rates and Charges (Cont'd)

(C) Nonrecurring Charges (Cont'd)

(3) Service Rearrangements (Cont'd)

- Subsequent to the initial installation of 800 Access Service, any addition or deletion of an 800 Access Service NXX will be charged for as follows. A nonrecurring charge applies for the first NXX code added or deleted and a separate nonrecurring charge applies for each additional NXX code added or deleted at the same time in the same LATA on the same order. The charges are the same as those set forth in NYNEX Tariff F.C.C. No. 1, Section 30.

- If the change involves the rearrangement of existing Switched Access Service from a digital Interface Group to another capable of a higher bit rate a Digital to Digital rearrangement charge will apply per Interface Group with the lower bit rate capability. The charge is the same as that set forth in NYNEX Tariff F.C.C. No. 1, Section 30. No charge applies to the individual Switched Access Services provided within the Interface Group unless the customer changes the service type or changes only a portion of the individual services from one Interface Group to another, in which case the appropriate nonrecurring charge for each change will apply.

- For all other changes, including the addition of or modifications to, optional features without separate nonrecurring charges, the Local Switching nonrecurring charge will apply. When an optional feature is not required on each transmission path, but rather on an entire transmission path group, an end office or an access tandem switch, only one such charge will apply (i.e., it will not apply per transmission path).

- If the change involves a modification to a FGB or D to include the initial provision of 800 Access Service in addition to non-800 Access Service traffic, the Local Switching Installation nonrecurring charge will apply for service rearrangements on the existing trunks.

6. Switched Access Service (Cont'd)

6.7 Rate Regulations (Cont'd)

6.7.1 Description and Application of Rates and Charges (Cont'd)

(D) Application of Rates

(1) Local Switching and Local Transport rates are applied to all minutes of use measured as specified in Section 6.8.

(2) As specified in the Commission's Order No. 20,077, Switched Access originating and/or terminating charges apply to all intrastate messages which make use of Switched Access subject to this tariff.

6.7.2 Minimum Periods

Switched Access Service and monthly rated optional features are provided for a minimum period of one month.

6.7.3 Reserved For Future Use

6.7.4 Change of Switched Access Service Arrangement Type

When the customer upgrades a FGA or FGB to a FGD service, the nonrecurring charges will not apply if the following conditions are met:

(a) The same customer premises is maintained and
(b) The orders for the disconnect of the FGA or FGB service and the start of the FGD service are placed with the Telephone Company at the same time, and
(c) The customer requests the same effective date for both the disconnect of service and start of service orders, or
(d) The customer requests the FGA or FGB service be disconnected no more than 135 days after an end office is equipped with equal access capabilities.

6. Switched Access Service (Cont'd)

6.7 Rate Regulations (Cont'd)

6.7.5 Moves

A move involves a change in the physical location of one of the following:

- The point of termination at the customer's or the customer's end user's premises
- The customer's premises.

The charges for the move are dependent on whether the move is to a new location within the same building or to a different building.

(A) Moves Within the Same Building

When the move is to a new location within the same building, the charge for the move will be the Local Switching nonrecurring charge for the capacity affected. There will be no change in the minimum period requirements.

(B) Moves to a Different Building

Moves to a different building will be treated as a discontinuance and start of service and all associated nonrecurring charges will apply. New minimum period requirements will also be established for the new service. The customer will also remain responsible for satisfying all outstanding minimum period charges for the discontinued service.

6.7.6 Measuring Access Minutes

Regulations for measuring access minutes for originating, terminating or two-way Feature Groups A, B and D are the same as those set forth in NYNEX TARIFF F.C.C. No. 1 Section, 6.7.6.

6.7.7 Network Blocking Charge for Feature Group D

Regulations are the same as those set forth in NYNEX TARIFF F.C.C. No. 1, Section 6.7.7.

6. Switched Access Service (Cont'd)

6.7 Rate Regulations (Cont'd)

6.7.8 Reserved For Future Use

6.7.9 Reserved For Future Use

6.7.10 Reserved For Future Use

6.7.11 Mileage Measurement

Regulations pertaining to Mileage Measurement and exceptions to the mileage measurement rules are the same as those set forth in NYNEX TARIFF F.C.C. No. 1, Section 6.7.11.

6. Switched Access Service (Cont'd)

6.8 Rates and Charges

6.8.1 Local Transport

(A) Switched Access Service

The following rates apply for all Feature Groups.

	- - - RATE - - - Per Access Minute
(1) Local Transport Termination	
(a) Originating	$ 0.001452
(b) Terminating	0.001452

	- - - - - RATE - - - - - Per Mile, Per Access Minute
(2) Local Transport Facility	
(a) Originating	$ 0.000015
(b) Terminating	0.000015

(B) 800 Access Service

	- - - RATE - - - Per Access Minute
(1) Local Transport Termination	
(a) Originating	0.001787
(b) Terminating	0.001787

	- - - - - - RATE - - - - - Per Mile, Per Access Minute
(2) Local Transport Facility	
(a) Originating	0.000016
(b) Terminating	0.000016

6. Switched Access Service (Cont'd)

6.8 Rates and Charges (Cont'd)

6.8.1 Local Transport (Cont'd)

	NONRECURRING CHARGE
(C) Local Transport Installation	
- Per Line or Trunk	$ 95.00
(D) Service Rearrangement	
(1) O - Passthrough, Change in Operator Services Traffic Arrangement:	
- Per 1st TOPS Office Rearranged	169.82
- Per Additional TOPS Office Rearranged	108.98

6. Switched Access Service (Cont'd)

6.8 Rates and Charges (Cont'd)

6.8.2 Local Switching

	- - - RATE - - - Per Access Minute
(A) Switched Access Service	
- Per Access Minute	
- Originating	$ 0.001901
- Terminating	0.001901
(B) 800 Service	- - - RATE - - -
- Originating	$ 0.002119
- Terminating	0.002119
	NONRECURRING CHARGE
(C) Local Switching Installation	
- Per Line or Trunk	$ 60.00

7. RESERVED FOR FUTURE USE

8. RESERVED FOR FUTURE USE

9. RESERVED FOR FUTURE USE

10. RESERVED FOR FUTURE USE

11. Special Facilities Routing of Access Services

11.1 Description of Special Facilities Routing of Access Services

The services provided under this tariff are provided over such routes and facilities as the Telephone Company may elect. Special Facilities Routing is involved when, in order to comply with requirements specified by the customer, the Telephone Company provides Switched Access Service in a manner which includes one or more of the following conditions:

11.1.1 Diversity

Two or more services must be provided over not more than two different physical routes.

11.1.2 Avoidance

A service must be provided on a route which avoids specified geographical locations.

11.1.3 Cable-Only Facilities

Certain services are provided on Cable-Only Facilities to meet the particular needs of a customer.

Service is provided subject to the availability of Cable-Only facilities. In the event of service failure, restoration will be made through the use of any available facilities as selected by the Telephone Company.

Avoidance, Diversity and Cable-Only facilities are available on Switched Access Service as set forth in Section 6.

In order to avoid the compromise of special routing information, the Telephone Company will provide the required routing information for each specially routed service to only the ordering customer. If requested by the customer, this information will be provided when service is installed and prior to any subsequent changes in routing.

The offering of Special Facilities Routing of Access Services contemplates the use of existing facilities.

The rates and charges for administration and any other specific items of cost directly attributable to the provision of this service shall be filed in this section also.

The rates and charges for Special Facilities Routing of Access Services as set forth in Section 11.2 are in addition to all other rates and charges that may be applicable for services provided under other sections of this tariff.

11. Special Facilities Routing of Access Services (Cont'd)

11.2 Rates and Charges for Special Facilities Routing of Access Service

The rates and charges for Special Facilities Routing of Access Services are as follows:

11.2.1 Diversity

For each service provided in accordance with 11.1.1 preceding, the rates and charges will be developed on an individual case basis and filed following:

USOC
SYD++

11.2.2 Avoidance

For each service provided in accordance with 11.1.2 preceding, the rates and charges will be developed on an individual case basis and filed following:

USOC
SYA++

11.2.3 Diversity and Avoidance Combined

For each service provided in accordance with 11.1.1 and 11.1.2 preceding, combined, the rates and charges will be developed on an individual case basis and filed following:

USOC
SYB++

11.2.4 Cable-Only Facilities

For each service provided in accordance with 11.1.3 preceding, the rates and charges will be developed on an individual case basis and filed following:

USOC
SYC++

12. Specialized Service or Arrangements

12.1 General

Specialized Service or Arrangements may be provided by the Telephone Company, at the request of a customer, on an individual case basis if such service or arrangements meet the following criteria:

- The requested service or arrangements are not offered under other sections of this tariff.

- The facilities utilized to provide the requested service or arrangements are of a type normally used by the Telephone Company in furnishing its other services.

- The requested service arrangements are provided within a LATA.

- The requested service or arrangements are compatible with other Telephone Company services, facilities, and its engineering and maintenance practices.

- This offering is subject to the availability of the necessary Telephone Company personnel and capital resources.

12.2 Move Charges

(A) When service without a maximum termination liability charge associated with it is moved to a different building, the nonrecurring charge applies; when moved to a new location in the same building, a charge of one-half the nonrecurring charge applies.

(B) When service with a maximum termination liability charge associated with it is moved and is reinstalled at a new location, the customer may elect:

- to pay the unexpired portion of the maximum termination liability charge for the service, if any, with the application of a nonrecurring charge and the establishment of a new maximum termination liability charge for such service at the new location, or to continue service subject to the unexpired portion of the maximum termination liability charge, if any, and pay the estimated costs of moving such service, provided that the customer requests these charges be quoted prior to ordering the service move. Charges for moving such service will be based on estimated costs attributable to the move.

Move charges include the estimated costs of removal, restoration of services or facilities necessitated by the move, transportation, storage, reinstallation, engineering, labor, supervision, materials, administration, and any other specific items of cost directly attributable to the move.

12. Specialized Service or Arrangements

12.3 Rates and Charges

Rates and charges, and additional regulations, if applicable, for specialized service or arrangements provided on an individual case basis are filed following:

13. Additional Engineering, Additional Labor and Miscellaneous Services

Regulations and charges for additional engineering, additional labor and miscellaneous services applicable to Switched Access Services provided under the regulations and rates of this tariff are the same as those set forth in the NYNEX TARIFF F.C.C. No. 1, Section 13 for originating, terminating or two-way Feature Groups A, B and D, with the exception of (A) those portions of Section 13.3.3 relating to the Customer Notification, Equal Access Balloting Process, the Allocation Process and Interexchange Carrier Customer Lists provisions for Presubscription; and (B) the following which may be provided by the Telephone Company, at the request of a customer, on an individual case basis and filed following:

	FID	Rates
Provision and Data Transmission to a customer's premises of Billing Detail and/or information,		
-per record transmittal using other than T-TRAN	TBN++	ICB Rates and Charges Apply

13. Additional Engineering, Additional Labor and Miscellaneous Services (Cont'd)

13.1 Rates and Charges

Rates and charges, and additional regulations, if applicable for specialized service or arrangements provided on an individual case basis are filed following:

14. RESERVED FOR FUTURE USE

15. Operating Territory

15.1 The operating territory of the Telephone Company for New Hampshire comprises the following locations, defined by the names of rate centers:

Alstead
Ashland
Barrington
Bartlett
Bedford
Belmont
Berlin
Bethlehem
Bristol
Campton
Canaan
Candia
Canterbury
Center Harbor
Center Ossipee
Center Sandwich
Charlestown
Claremont
Colebrook
Concord
Conway
Danbury
Deerfield
Derry
Dover
Dublin
Durham
Enfield
Epping
Epsom
Errol
Exeter
Farmington
Fitzwilliam
Franconia
Franklin
Goffstown
Gorham
Greenfield
Greenville
Groveton
Hampstead
Hampton
Hancock
Hanover
Harrisville
Hinsdale
Jackson
Jaffrey
Jefferson
Keene
Kingston
Laconia
Lancaster
Lebanon
Lisbon
Littleton
Lyme
Madison
Manchester
Marlborough
Marlow
Meredith
Merrimack
Milan
Milford
Milton
Milton Mills
Monroe
Nashua
New Boston
New market
Newport
N. Conway
N. Stratford
N. Walpole
Northwood
N. Woodstock
Orford
Pelham
Penacook
Peterborough
Piermont
Pike
Pittsburg
Pittsfield
Plainfield
Plaistow
Plymouth
Portsmouth
Raymond
Rindge
Rochester
Rumney
Rye Beach
Salem
Sanbornville
Seabrook
Somersworth
S. Hampton
Spofford
Sullivan
Sunapee
Suncook
Tamworth
Tilton
Troy
Twin Mountain
Walpole
Warren
W. Chesterfield
W. Lebanon
Westmoreland
W. Stewartstown
Whitefield
Winchester
Wolfeboro
Woodsville

ATTACHMENT
ITEM one Comm 1-1(e)
VZ # 84

941-125
Tariff 79

Ex
Access
tariff

NEW ENGLAND TELEPHONE AND TELEGRAPH COMPANY

Rates and Charges Effective In

THE STATE OF NEW HAMPSHIRE

New England Telephone
A NYNEX Company

1 Tariff Information 1
1.1 Concurring, Connecting and Other Participating Carriers 1
1.2 Page Revisions 2
1.3 Supplement Numbers 2
1.4 Tariff Codes 2
1.5 Referencing 3
1.5.1 Reference to Other Tariffs 3
1.5.2 Reference to Other Publications 3
1.6 Tariff Terminology 4
1.6.1 Abbreviations 4
1.6.2 Definitions 5
Access Code 5
Access Minutes 5
Access Tandem 5
Answer/Disconnect Supervision 5
Attenuation Distortion 5
Bit 5
Business Day 5
Busy Hour Minutes of Capacity (BHMC) 5
Call 5
Carrier or Common Carrier 5
CCS 6
Central Office 6
Central Office Prefix 6
Channel(s) 6
Channelize 6
Coin Station 6
Common Line 6
Communications System 6
Conversation Minutes 6
Customer(s) 6
Decibel 7
Decibel Reference Noise C-Message Weighting 7
Decibel Reference Noise C-Message Referenced to 0 7
Detail Billing 7
Directory Assistance 7
Effective 2-Wire 7
Effective 4-Wire 7
End Office Switch 7
End User 7
Entry Switch 8

Equal Level Echo Path Loss 8
Expected Measured Loss 8
Field Identifier 8
First Come-First Served 8
First Point of Switching 8
Frequency Shift 8
Grandfathered 8
Host Office 8
Impedance Balance 9
Individual Case Basis 9
Inserted Connection Loss 9
Interexchange Carrier (IC) or Interexchange Common Carrier 9
Interstate Communications 9
Intrastate Communications 9
Legal Holiday 9
Line-Side Connection 9
Local Access and Transport Area 9
Local Calling Area 9
Local Tandem Switch 9
Loss Deviation 9
Major Fraction Thereof 10
Message 10
Network Control Signaling 10
North American Numbering Plan 10
Off-Hook 10
On-Hook 10
Operator Services Provider 10
Originating Direction 10
Pay Telephone 10
Point of Termination 10
Premises 11
Remote Switching Modules and/or Remote Switching Systems 11
Return Loss 11
Service Access Code 11
Singing Return Loss 11
Subtending End Office of an Access Tandem 11
Switching Systems 11
Terminating Direction 11
Traffic Type 11
Transmission Path 11
Trunk 12
Trunk Group 12

Trunk-Side Connection 12
Two-Wire to Four-Wire Conversion 12
Uniform Service Order Code (USOC) 12
V and H Coordinates Method 12
WATS Serving Office 12
Wire Center 12

2 General Regulations 1
2.1 Application of Tariff 1
2.2 Use of Service 2
2.2.1 General 2
2.2.2 Lawful Use 2
2.2.3 Access Service Connections 2
2.2.4 Title or Ownership Rights 2
2.2.5 Minimum Periods of Service 2
2.3 Undertaking of the Telephone Company 3
2.3.1 Limitations 3
2.3.2 Liability 3
2.3.3 Provision of Service 5
2.3.4 Installation and Point of Termination of Service 5
2.4 Customer Notification and Coordination 6
2.4.1 Changes and Substitutions 6
2.4.2 Refusal and Discontinuance of Service 7
2.4.3 Service-Affecting Activities 7
2.4.4 Provision and Ownership of Telephone Numbers 8
2.4.5 Interference or Impairments 8
2.4.6 Customer Coordination with Respect to Network Contingencies 9
2.5 Obligations of the Customer 10
2.5.1 Limitations 10
2.5.2 Liability 11
2.5.3 Ownership of Facilities and Theft 12
2.5.4 Equipment Space and Power 12
2.5.5 Availability for Testing 12
2.5.6 Coordination with Respect to Network Contingencies 12
2.5.7 Balance 12
2.5.8 Design of Customer Services 13
2.5.9 References to the Telephone Company 13
2.5.10 Jurisdictional Report Requirements 14
2.5.11 Determination of Intrastate Charges for Mixed Interstate and Intrastate Access Service 17

3 Ordering of Service 1

3.1 Ordering, Rating and Billing of Access Services Where More Than One Exchange Telephone Company is Involved .. 2

3.1.1 Meet-Point Billing 2

Exhibit 3.1.1-1 - Meet Point Billing 5

4 Issuance, Payment and Crediting of Customer Bills 1

4.1 Undertaking of the Telephone Company 1

4.1.1 Billing Convention Methods 1
4.1.2 Late Payment Penalty 1
4.1.3 Billing Periods 1
4.1.4 Payment Date 2
4.1.5 Medium of Payment 2
Immediately Available Funds 2
4.1.6 Customer Deposits 3
4.1.7 Nonrecurring Charges 4
4.1.8 Billing Dispute 5
4.1.9 Billing Adjustments and Verification 6
4.1.10 Computation of Billed Charges 6
4.1.11 Additional Copies of Bills 7
4.1.12 Meet-Point Billing 7

4.2 Credit Allowance Conditions 8

4.2.1 Service Interruptions 8

5 Carrier Common Line Access Service 1
5.1 General 1
5.1.1 Limitations 2
5.2 Undertaking of the Telephone Company 3
5.2.1 Scope 3
5.3 Obligations of the Customer 4
5.3.1 Reselling MTS/MTS–type Service 4
5.3.2 Customer Facilities 4
5.3.3 Furnishing of Call Detail 4
5.4 Coin Revenue Payment Arrangements 5
5.4.1 Bill Period Coin Revenue 5
5.4.2 Total Customer Coin Revenue 5
5.4.3 Coin Revenue Recourse Adjustments 5
5.4.4 Net Customer Coin Revenue 6
5.4.5 Coin Revenue Audit Provisions 6
5.5 Rate Regulations 7
5.5.1 Application of Rates and Charges 7
5.5.2 Determination of Charges 7

6 Switched Access Service 1
6.1 General 1
6.1.1 Service Structure 2
6.1.2 Manner of Provision 2
6.2 Rate Categories 3
6.2.1 Local Transport 4
Interface Groups 5
Non-Chargeable Optional Features 5
Customer Specified Entry Switch Receive Level 6
Customer Specification of Local Transport Termination 6
6.2.2 Local Switching 7
Local Access 7
Common Switching 7
Transport Termination 7
Line Termination 7
Intercept 7
6.2.3 Local Switching Optional Features 8
Common Switching 8
Call Denial on Line or Hunt Group 8
Service Code Denial on Line or Hunt Group 8
Hunt Group Arrangement 8
Uniform Call Distribution Arrangement 8
Nonhunting Number for Use With Hunt Group or Uniform Call Distribution Arrangement 8
Up to Seven Digit Outpulsing of Access Digits To Customer 9
Service Class Routing 9
Alternate Traffic Routing-Multiple Customer Premises 9
Alternate Traffic Routing-End Office Alternate Routing When Ordered in Trunks 9
Band Advance Arrangement for Use With WATS Access Line Service 10
End Office End User Line Service Screening for Use With WATS Access Line Service 10
Hunt Group Arrangement for Use With WATS Access Line Service 10
Uniform Call Distribution Arrangement for Use With WATS Access Line Service 10
Nonhunting Number for Use With Hunt Group Arrangement or Uniform Call Distribution Arrangement for Use With WATS Access Line Service 10
Automatic Number Identification 11
Routing of IntraLATA Calls to the Telephone Company for Use With WATS Access Line Service 12

Transport Termination 13
Operator Trunk-Full Feature 13
Operator Trunk-Assist Feature 13
Rotary Dial Station Signaling 13
WATS Access Line Service Terminations 13
E&M Supervisory Signaling 13
Answer Supervision 13
6.3 Description of Switched Access Services 14
6.3.1 General 14
6.4 Responsibility of the Telephone Company 15
6.4.1 Transmission Specifications 15
6.4.2 Excessive Trunk Group Blocking 15
6.4.3 Measuring Access Minutes 15
6.4.4 Determining Local Transport Facility Mileage 15
6.5 Responsibility of The Customer 16
6.5.1 Report Requirements 16
Jurisdictional Reports 16
Usage Data-Meet Point Billing 16
800 NXX Code Reports 16
Code Screening Reports 16
Trunk Group Measurement Reports 16
6.5.2 Supervisory Signaling 16
6.5.3 Design of Switched Access Services 16
6.6 Rate Regulations 17
6.6.1 Types of Rates and Charges 17
Monthly Rates 17
Usage Rates 17
Nonrecurring Charges 17
Installation of Service 17
Installation of Optional Features 17
Service Rearrangements 18
All Other Service Rearrangements 19
Moves 20
Moves Within the Same Building 20
Moves to a Different Building 20
6.6.2 Application of Rates and Charges 21

7 Reserved For Future Use 1

8 Reserved For Future Use 1

9 Reserved For Future Use 1

10 Reserved For Future Use 1

11 Special Facilities Routing of Access Services 1

11.1 General 1

11.1.1 Description 2

Diversity 2

Avoidance 2

Cable-Only Facilities 2

11.1.2 Manner of Provision 2

11.2 Rate Regulations 3

12 Reserved For Future Use 1

13 Additional Engineering, Labor and Miscellaneous Services 1

14 Reserved For Future Use 1

Operating Territory 1

15.1 Locations 1

15.1.1 Rate Centers 2

16 Reserved For Future Use 1

17 Reserved For Future Use 1

18 Reserved For Future Use 1

19 Reserved For Future Use 1

20 Reserved For Future Use 1

21 Reserved For Future Use 1

22 Reserved For Future Use 1

23 Reserved For Future Use 1

24 Reserved For Future Use 1

25 Reserved For Future Use 1

26 Reserved For Future Use 1

27 Reserved For Future Use 1

Reserved For Future Use 1

29 Reserved For Future Use 1

30 Rates and Charges 1
30.1 Reserved For Future Use 2
30.2 Reserved For Future Use 3
30.3 Ordering of Service 4
30.4 Reserved For Future Use 5
30.5 Carrier Common Line Access Service 6
30.5.1 Carrier Common Line 6
30.6 Switched Access 7
30.6.1 Local Transport 7
30.6.2 Local Switching 7
30.7 Reserved For Future Use 8
30.8 Reserved For Future Use 9
30.9 Reserved For Future Use 10
30.10 Reserved For Future Use 11
30.11 Special Facilities Routing of Access Services 12
30.11.1 Individual Case Basis 12
30.12 Reserved For Future Use 13
30.13 Additional Engineering, Labor and Miscellaneous Services. 14

1 Tariff Information

1.1 Concurring, Connecting and Other Participating Carriers

There are no Concurring, Connecting or Other Participating Carriers.

1.2 Page Revisions

As a result of regulatory initiatives Tariff pages are revised and filed with the *New Hampshire Public Utilities Commission* on a continual basis. When tariff pages are filed, they show an *Issued* and *Effective* date (*see page bottom*). The Issued date is the day upon which the pages were filed. The Effective date is: [a] thirty days following the Issued date, or [b] the date upon which the pages have been Ordered to become effective.

Each tariff page displays unique page identification information (*see page top right*). The first issuance of a page is labeled as the *Original*. Future revisions are issued sequentially as follows, First Revision, Second Revision, Third Revision, etc. Revised pages cancel effective pages. The effective page is the foundation upon which all revisions are made.

1.3 Supplement Numbers

Tariff pages are occasionally issued as *Supplements*. This occurs when the page being filed is already pending Commission decision in another regulatory initiative. When the pending page becomes effective and the supplement page becomes effective as well, it becomes necessary to incorporate the revisions contained on the Supplement page into a standard-number tariff page. The incorporation will generally occur in the next regulatory initiative in which that page is involved.

1.4 Tariff Codes

Appearing in the far right margins of tariff pages are alphabetical characters enclosed in parenthesis which represent a coding mechanism used to explain the kind of modification that has been made from one page revision to the next. They are as follows:

(C)	A change in regulation
(D)	A deletion due to discontinuance of a rate or regulation
(I)	A rate that has been increased
(N)	A new regulation or rate
(R)	A rate that has been decreased
(S)	The incorporation of approved material issued under a Supplement
(T)	Text that has changed without causing a change in regulation
(X)	Text that has been moved from one page to another

1.5 Referencing

1.5.1 Reference to Other Tariffs
Whenever reference is made in this tariff to other tariffs of the Telephone Company, the reference is to the tariffs in force as of the effective date of this tariff, and to amendments thereto and successive issues thereof. The regulations, rates and charges contained herein are in addition to the applicable regulations, rates and charges specified in other tariffs of the Telephone Company which are referenced herein.

1.5.2 Reference to Other Publications	
A.	Reference to publications (technical or otherwise), may be made in this tariff. Such publications may be obtained from the sources specified in *NYNEX Tariff F.C.C. No. 1*.

1.6 Tariff Terminology

Certain abbreviations and terms are contained within this tariff; they are explained as follows:

1.6.1 Abbreviations	
ac	Alternating Current
ANI	Automatic Number Identification
BHMC	Busy Hour Minutes of Capacity
CO	Central Office
dB	Decibel
dc	Direct Current
ELEPL	Equal Level Echo Path Loss
[illegible]	Echo Path Loss
f	Frequency
FID	Field Identifier
FCC	Federal Communications Commission
Hz	Hertz
IC	Interexchange Carrier
ICB	Individual Case Basis
LATA	Local Access and Transport Area
MTS	Message Telecommunications Service(s)
NPA	Numbering Plan Area
NXX	Three-Digit Central Office Code
TSPS	Traffic Service Position System
USOC	Uniform Service Order Code
V&H	Vertical & Horizontal
[illegible]TS	Wide Area Telecommunications Service(s)

1.6.2 Definitions
Access Code-A uniform five or seven digit code assigned by the Telephone Company to an individual customer. The five digit code has the form 10XXX and the seven digit code has the form 950-XXXX or 950-1XXX.
Access Minutes-That usage of exchange facilities in intrastate service for the purpose of calculating chargeable usage. On the originating end of an intrastate call, usage is measured from the time the originating end user's call is delivered by the Telephone Company to and acknowledged as received by the customer's facilities connected with the originating exchange. On the terminating end of an intrastate call, usage is measured from the time the call is received by the end user in the terminating exchange. Timing of usage at both originating and terminating ends of an intrastate call shall terminate when the calling or called party disconnects, whichever event is recognized first in the originating and terminating exchanges, as applicable.
Access Tandem-A Telephone Company switching system that provides a concentration and distribution function for originating or terminating traffic between end offices and a customer's premises.
Answer/Disconnect Supervision-The transmission of the switch trunk equipment supervisory signal (off-hook or on-hook) to the customer's point of termination as an indication that the called party has answered or disconnected.
Attenuation Distortion-The difference in loss at specified frequencies relative to the loss at 1004 Hz, unless otherwise specified.
Bit-The smallest unit of information in the binary system of notation.
Business Day-The time of day that a company is open for business. Generally, in the business community, these are 8:00 or 9:00 A.M. to 5:00 or 6:00 P.M., respectively, with an hour for lunch, Monday through Friday, resulting in a standard forty hour work week. However, Business Day hours for the Telephone Company may vary based on Company policy, union contract and location. To determine such hours for an individual company, or company location, that company should be contacted.
Busy Hour Minutes of Capacity (BHMC)-The customer specified maximum amount of Switched Access Service access minutes the customer expects to be handled in an end office switch during any hour in an 8:00 A.M. to 11:00 P.M. period for the Feature Group ordered. This customer furnished BHMC quantity is the input data the Telephone Company uses to determine the number of transmission paths for the Feature Group ordered.
Call-A customer attempt for which the complete address code (e.g., 0–, 911, or ten digits) is provided to the serving dial tone office.
Carrier or Common Carrier-See *Interexchange Carrier.*

1.6.2 Definitions
CCS-A hundred call seconds, which is a standard unit of traffic load that is equal to one-hundred seconds of usage or capacity of a group of servers (e.g., trunks).
Central Office-A local Telephone Company switching system where Telephone Exchange Service customer station loops are terminated for purposes of interconnection to each other and to trunks.
Central Office Prefix-The first three digits (NXX) of the seven digit telephone number assigned to a customer's Telephone Exchange Service when dialed on a local basis.
Channel(s)-An electrical (or photonic, in the case of fiber-optic based transmission systems), communications path between two or more points of termination.
Channelize-The process of multiplexing-demultiplexing wider bandwidth or higher speed channels into narrower bandwidth or lower speed channels.
Coin Station-A location where Telephone Company equipment is provided in a public or semi-public place where Telephone Company customers can originate telephonic communications and pay the applicable charges by inserting coins into the equipment.
Common Line-A line, trunk, pay telephone line or other facility provided under the general and/or local exchange service tariffs of the Telephone Company, terminated on a central office switch. A common line residence is a line or trunk provided under the residence regulations of the general and/or local exchange service tariffs. A common line business is a line provided under the business regulations of the general and/or local exchange service tariffs.
Communications System-Channels and other facilities which are capable of communications between terminal equipment provided by other than the Telephone Company.
Conversation Minutes-The measurement of minutes beginning when either answer supervision or an off-hook supervisory signal is received from the terminating end user's end office and ending when either disconnect supervision or an on-hook supervisory signal is received from the terminating end user's end office, indicating the called party has disconnected.
Customer(s)-Any individual, partnership, association, joint-stock company, trust, corporation or governmental entity or other entity which subscribes to the services offered under this tariff, including Interexchange Carriers (ICs), resellers or other entities engaged in the provisioning of interexchange services which utilize the network of the Telephone Company and who have been certified to provide interexchange services by the *New Hampshire Public Utility Commission* as described in Section 2.1.

1.6.2 Definitions
Decibel-A unit used to express relative difference in power, usually between acoustic or electric signals, equal to ten times the common logarithm of the ratio of two signal powers.
Decibel Reference Noise C-Message Weighting-Noise power measurements with C-Message weighting in decibels relative to a reference 1000 Hz tone of 90 dB below one milliwatt.
Decibel Reference Noise C-Message Referenced to 0-Noise power in Decibel Reference Noise C-Message Weighting referred to or measured at a zero transmission level point.
Detail Billing-The listing of each message and/or rate element for which charges to a customer are due on a bill prepared by the Telephone Company.
Directory Assistance-The provision of telephone numbers by a Telephone Company operator when the operator location is accessed by a customer by dialing (NPA) 555-1212.
Echo Path Loss-The measure of reflected signal at a four-wire point of termination without regard to the send and receive Transmission Level Point.
Echo Return Loss-A frequency weighted measure of return loss over the middle of the voiceband (approximately 500 to 2500 Hz), where talker echo is most annoying.
Effective 2-Wire-A condition which permits the simultaneous transmission in both directions over a channel, but it is not possible to insure independent information transmission in both directions. Effective two-wire channels may be terminated with 2-wire or 4-wire interfaces.
Effective 4-Wire-A condition which permits the simultaneous independent transmission of information in both directions over a channel. The method of implementing effective 4-wire transmission is at the discretion of the Telephone Company (physical, time domain, frequency-domain separation or echo cancellation techniques). Effective 4-wire channels may be terminated with a 2-wire interface at the customer's premises. However, when terminated 2-wire, simultaneous independent transmission cannot be supported because the 2-wire interface combines the transmission paths into a single path.
End Office Switch-A local Telephone Company switching system where Telephone Exchange Service customer station loops are terminated for purposes of interconnection to trunks. Included are Remote Switching Modules and Remote Switching Systems served by a host office in a different wire center.
End User-Any customer of an intrastate telecommunications service that is not a carrier, except that a carrier other than a telephone company shall be deemed to be an End User when such carrier uses a telecommunications service for administrative purposes.

1.6.2 Definitions

Entry Switch-See *First Point of Switching*.

Equal Level Echo Path Loss-The measure of Echo Path Loss (EPL) at a 4-wire interface which is corrected by the difference between the send and receive Transmission Level Point (TLP). ELEPL = EPL – TLP (send) + TLP (receive).

Exchange-A unit generally smaller than a Local Access and Transport Area, established by the Telephone Company for the administration of communications service in a specified area which usually embraces a city, town or village and its environs. It consists of one or more central offices together with the associated facilities used in furnishing communications service within that area. One or more designated exchanges comprise a given Local Access and Transport Area.

Expected Measured Loss-A calculated loss which specifies the end-to-end 1004 Hz loss on a terminated test connection between two readily accessible manual or remote test points. It is the sum of the inserted connection loss and test access loss including any test pads.

Field Identifier-Two to four characters that are used on service orders to convey specific instructions. Field Identifiers may or may not have associated data. Selected Field Identifiers are used in Telephone Company billing systems to generate nonrecurring charges.

First Come-First Served-A procedure followed when a shortage of facilities or equipment occurs, such that an Access Service ordered cannot be installed. The orders delayed by the shortage of facilities will be prioritized according to the sequence in which they were received. That is, when facilities or equipment become available, the first order received will be the first order processed.

First Point of Switching-The first Telephone Company location at which switching occurs on the terminating path of a call proceeding from the customer's premises to the terminating end office and, at the same time, the last Telephone Company location at which switching occurs on the originating path of a call proceeding from the originating end office to the customer's premises.

Frequency Shift-The change in the frequency of a tone as it is transmitted over a channel.

Grandfathered-Terminal Equipment, Multi-line Terminating Systems and Protective Circuitry directly connected to the facilities utilized to provide services under the provisions of this tariff, and which are considered grandfathered under *Part 68 of the FCC's Rules and Regulations*.

Host Office-An electronic switching system which provides call processing capabilities for one or more Remote Switching Modules or Remote Switching Systems.

1.6.2 Definitions
Impedance Balance-The method of expressing Echo Return Loss and Singing Return Loss at a 4-wire interface whereby the gains and/or loss of the 4-wire portion of the transmission path, including the hybrid, are not included in the specification.
Individual Case Basis-A condition in which the regulations (if applicable), rates and charges for an offering under the provisions of this tariff are developed based on the circumstances in each case.
Inserted Connection Loss-The 1004 Hz power difference (in dB) between the maximum power available at the originating end and the actual power reaching the terminating end through the inserted connection.
Interexchange Carrier (IC) or Interexchange Common Carrier-Any individual, partnership, association, joint-stock company, trust, governmental entity or corporation, other than the Telephone Company, authorized by *the New Hampshire Public Utilities Commission* and engaged for hire in intrastate communications by wire or radio, between two or more exchanges.
Interstate Communications-Both interstate and foreign communications.
rastate Communications-Any communications within a state subject to oversight by a state regulatory commission as provided by the laws of the state involved.
Legal Holiday-Days other than Saturday or Sunday on which the Telephone Company is normally closed. These include New Year's Day, Independence Day, Labor Day, Veteran's Day, Thanksgiving Day, Christmas Day and a day when Washington's Birthday, Memorial Day or Columbus Day is legally observed and other locally observed holidays when the Telephone Company is closed.
Line-Side Connection-A connection of a transmission path to the line side of a local exchange switching system.
Local Access and Transport Area-A geographic area established for the provision and administration of communications service. It encompasses one or more designated exchanges, which are grouped to serve common social, economic and other purposes.
Local Calling Area-A geographical area as defined in *NHPUC- No. 75 Tariff* in which an end user (Telephone Exchange Service subscriber) may complete a call without incurring MTS charges.
Local Tandem Switch-A local Telephone Company switching unit by which local or access telephonic communications are switched to and from an End Office Switch.
Loss Deviation-The variation of the actual loss from the designed value.

1.6.2 Definitions
Major Fraction Thereof-Any period of time in excess of one-half of the stated amount of time. As an example, in considering a period of twenty-four hours, a major fraction thereof would be any period of time in excess of twelve hours exactly. Therefore, if a given service is interrupted for a period of thirty-six hours and fifteen minutes, the customer would be given a credit allowance for two twenty-four hour periods for a total of forty-eight hours.
Message-A call.
Network Control Signaling-The transmission of signals used in the telecommunications system which performs functions such as supervision (control, status and charge signals), address signaling (e.g., dialing), calling and called number identifications, rate of-flow, service selection error control and audible tone signals (call progress signals indicating reorder or busy conditions, alerting, coin denominations, coin collect and coin return tones) to control the operation of the telecommunications system.
North American Numbering Plan-A three digit area (Numbering Plan Area) code and a seven digit telephone number made up of a three digit Central Office code plus a four digit station number.
Off-Hook-The active condition of Switched Access or a Telephone Exchange Service line.
On-Hook-The idle condition of Switched Access or a Telephone Exchange Service line.
Operator Services Provider-The interstate provider of operator services to which an end user placing an operator assisted call is connected when the end user's pre-subscribed Interexchange Carrier designates a provider of operator services to handle its operator traffic.
Originating Direction-The use of Switched Access Service for the origination of calls from an end user premises to an IC premises.
Pay Telephone-Telephone Company provided instruments and related facilities that are available to the general public for public convenience and necessity, including public and semi-public telephones and coinless telephones.
Point of Termination-The demarcation point or network interface, at which the Telephone Company's responsibility for the provision of Access Service ends (refer to Section 2.3.4). The point of demarcation or network interface is the point of interconnection between Telephone Company communications facilities and customer provided facilities as defined in *Section 68.3 of the Federal Communications Commission's Rules and Regulations.*

1.6.2 Definitions
Premises-A building, or a portion of a building in a multi-tenant building, or buildings on continuous property (except Railroad Right-of-Way, etc.).
Remote Switching Modules and/or Remote Switching Systems-Small, remotely controlled electronic end office switches which obtain their call processing capability from an ESS-type Host Office and cannot accommodate direct trunks to a customer.
Return Loss-A measure of the similarity between the two impedances at the junction of two transmission paths. The higher the return loss, the higher the similarity.
Service Access Code-A three digit code that takes the place of an NPA in the dialing sequence. Particular services provided by an IC, BOC or Independent Telephone Company, may include but are not limited to 700 (IC Services), 800 (800 Access Service) and 900 (National DIAL-IT network communications service). Service Access Codes are associated with Switched Access Services that may be ordered by an IC as part of the Access Services tariff. A Telephone Company may screen calls and route to an IC-specified point of presence based upon the SAC dialed.
Singing Return Loss-The frequency weighted measure of return loss at the edges of the voiceband (200 to 500 Hz and 2500 to 3200 Hz), where singing (instability) problems are most likely to occur.
Subtending End Office of an Access Tandem-An end office that has final trunk group routing through that tandem.
Switching Systems-The hardware and/or software utilized by the Telephone Company for the establishment and maintenance of a given central office.
Terminating Direction-The use of Switched Access Service for the completion of calls from a customer premises to an End User premises.
Traffic Type-Three major types of traffic identified as: Originating, Terminating and Directory Assistance. Originating Traffic type represents access capacity within a LATA for carrying traffic from the end user to the customer. Terminating Traffic type represents access capacity within a LATA for carrying traffic from the customer to the end user. Directory Assistance traffic type represents access capacity within a LATA for carrying Directory Assistance traffic from the customer to a Directory Assistance location.
Transmission Path-An electrical path capable of transmitting signals within the range of the service offering, (e.g., a voice grade transmission path is capable of transmitting voice frequencies within the approximate range of 300 to 3000 Hz). A transmission path is comprised of physical or derived channels consisting of any form or configuration of facilities plant typically used in the telecommunications industry.

1.6.2 Definitions
Trunk-A transmission path connecting two switching systems in a network, used in the establishment of an end-to-end connection.
Trunk Group-A set of trunks which are traffic engineered as a unit for the establishment of connections between switching systems in which all of the communications paths are interchangeable.
Trunk-Side Connection-The connection of a transmission path to the trunk side of a local exchange switching system.
Two-Wire to Four-Wire Conversion-An arrangement which converts a 4-wire transmission path to a 2-wire transmission path to allow a 4-wire facility to terminate in a 2-wire entity (e.g., a central office switch).
Uniform Service Order Code (USOC)-A three or five character alphabetic, numeric or an alphanumeric code that identifies a specific item of service or equipment. USOCs are used in the Telephone Company billing system to generate recurring rates and nonrecurring charges.
V and H Coordinates Method-A method of computing airline miles between two points utilizing an established formula which is based on the vertical and horizontal coordinates of the two points.
WATS Serving Office-A Telephone Company designated serving wire center where switching, screening and/or recording functions are performed in connection with the closed end of WATS or WATS-type services.
Wire Center-A building in which one or more central offices, used for the provision of Telephone Exchange Services are located.

2 General Regulations

2.1 Application of Tariff

This tariff contains regulations, rates and charges applicable to Switched Access Services and other miscellaneous services, hereinafter referred to collectively as service(s), provided by the New England Telephone and Telegraph Company, hereinafter referred to as the Telephone Company, to Interexchange Carriers, including resellers or other entities engaged in the provision of Public Utility Common Carrier Services which utilize the network of the Telephone Company, who are certified to provide such services by the *New Hampshire Public Utilities Commission*.

For purposes of administering this tariff, such Interexchange Carriers, including resellers or other entities engaged in the provision of Public Utility Common Carrier Services which utilize the network of the Telephone Company, who are certified to provide such services by the *New Hampshire Public Utilities Commission*, are hereinafter referred to as *Customers*.

2.2 Use of Service

2.2.1 General	
A.	A customer, authorized by the *New Hampshire Public Utilities Commission*, offering Public Utilities Common Carrier Services will receive service under *NHPUC – No. 78*, as set forth in Section 2.1.

2.2.2 Lawful Use	
A.	The service provided under this tariff shall not be used for an unlawful purpose.

2.2.3 Access Service Connections	
A.	Equipment and Systems (i.e., terminal equipment, multi-line terminating systems and communications systems) may be connected with Switched Access Service furnished by the Telephone Company where such connection is made in accordance with the provisions stated in Section 2 and in *Technical Reference Publication AS No. 1*.

2.2.4 Title or Ownership Rights	
A.	The payment of rates and charges by customers for the services offered under the provisions of this tariff does not assign, confer or transfer title or ownership rights to proposals or facilities developed or utilized respectively, by the Telephone Company in the provision of such services.

2.2.5 Minimum Periods of Service	
A.	The minimum periods for which services and monthly rated optional features are provided and for which rates and charges are applicable is one month.
B.	When a service is discontinued prior to the expiration of the minimum period, charges are applicable, whether the service is used or not. The applicable charge will be the total monthly charges, at the rate level in effect at the time service is discontinued, for the remainder of the minimum period plus all applicable nonrecurring charges.

2.3 Undertaking of the Telephone Company

2.3.1 Limitations	
A.	The Telephone Company does not undertake to transmit messages ~~under this tariff~~.
B.	The Telephone Company will, for maintenance purposes, test its services only to the extent necessary to detect and/or clear troubles.
C.	The Telephone Company does not warrant that its facilities and services meet standards other than those set forth in this tariff.
D.	The provision of such services by the Telephone Company as set forth in this tariff does not constitute a joint undertaking with the Customer for the furnishing of any service.
E.	Signals applied to a metallic facility shall conform to the limitations set forth in *Technical Reference Publication AS No. 1*. In the case of application of dc telegraph signaling systems, the customer shall be responsible, at its expense, for the provision of current limiting devices to protect the Telephone Company facilities from excessive current due to abnormal conditions and for the provision of noise mitigation networks when required to reduce excessive noise.

2.3.2 Liability	
A.	The Telephone Company's liability, if any, for its willful misconduct is not limited by this tariff.
B.	With respect to any other claim or suit, by a customer or by any others, for damages associated with the installation, provision, termination, maintenance, repair or restoration of service, and subject to the provisions contained in Section 2.3.2C, through 2.3.2G, the Telephone Company's liability, if any, shall not exceed an amount equal to the proportionate charge for the service for the period during which the service was affected. This liability for damages shall be in addition to any amounts that may otherwise be due the customer under this tariff as a Credit Allowance for a Service Interruption.
C.	The Telephone Company shall not be liable for any act or omission of any other carrier or customer providing a portion of a service, nor shall the Telephone Company for its own act or omission hold liable any other carrier or customer providing a portion of a service.
D.	The Telephone Company is not liable for damages to the customer's premises resulting from the furnishing of a service, including the installation and removal of equipment and associated wiring, unless the damage is caused by the Telephone Company's negligence.

2.3.2 Liability	
E.	The Telephone Company shall be indemnified, defended and held harmless by the end user or customer against any claim, loss or damage arising from the end user's or customer's use of services offered under this tariff, involving:
1.	Claims for libel, slander, invasion of privacy, or infringement of copyright arising from the end user's or customer's own communications;
2.	Claims for patent infringement arising from the end user's or customer's acts combining or using the service furnished by the Telephone Company in connection with facilities or equipment furnished by the end user or customer; or
3.	All other claims arising out of any act or omission of the end user or customer in the course of using services provided pursuant to this tariff.
F.	The Telephone Company does not guarantee or make any warranty with respect to its services when used in an explosive atmosphere. The Telephone Company shall be indemnified, defended and held harmless by the customer from any and all claims by any person relating to the customer's use of services so provided.
G.	No license under patents (other than the limited license to use) is granted by the Telephone Company or shall be implied or arise by estoppel, with respect to any service offered under this tariff. The Telephone Company will defend the customer against claims of patent infringement arising solely from the use by the customer of services offered under this tariff and will indemnify such customer for any damages awarded based solely on such claims.
H.	The Telephone Company's failure to provide or maintain services under this tariff shall be excused by governmental orders, civil commotions, criminal actions taken against the Telephone Company, acts of God and other circumstances beyond the Telephone Company's reasonable control, subject to the Credit Allowance for a Service Interruption as set forth in Section 4.2.
I.	The Telephone Company shall be responsible only for the installation, operation and maintenance of the services it provides.

2.3.3 Provision of Service	
A.	The use, installation and restoration of services shall be in accordance with *Part 64.401, Appendix A, of the Federal Communications Commission's Rules and Regulations*, which specifies the priority system for such activities. Subject to compliance with those rules, where a shortage of facilities or equipment exists at any time, either for temporary or protracted periods, the services offered herein will be provided to customers on a first-come, first-served basis.
B.	The services offered under the provisions of this tariff are subject to availability. The Telephone Company, to the extent that such services are or can be made available with reasonable effort, and after provision has been made for the Telephone Company's telephone exchange services, will provide to the customer upon reasonable notice services offered in other applicable sections of this tariff at rates and charges specified therein.
C.	Services are provided twenty-four hours daily, seven days per week, except as set forth in other applicable sections of this tariff.

2.3.4 Installation and Point of Termination of Service	
	The Access Services provided under this tariff include Telephone Company communication facilities up to the Point of Termination (as defined in Section 1.6), which denotes the demarcation point, and will be installed by the Telephone Company to such Point of Termination. If the Point of Termination is moved subsequent to the original installation, the charges described in Section 6.6.1 for Switched Access Services, apply as appropriate. Any additional terminations at the customer's premises beyond such Point of Termination are the sole responsibility of the customer.

2.4 Customer Notification and Coordination

2.4.1 Changes and Substitutions	
A.	Except as provided for equipment and systems subject to *FCC Part 68 Regulations at 47 C.F.R. Section 68.110(b)*, the Telephone Company may, where such action is reasonably required in the operation of its business:
1.	substitute, change or rearrange any facilities used in providing service under this tariff, including but not limited to: [a] substitution of different metallic facilities, [b] substitution of carrier or derived facilities for metallic facilities used to provide other than metallic facilities, and [c] substitution of metallic facilities for carrier or derived facilities used to provide other than metallic facilities;
2.	change minimum protection criteria,
3.	change operating or maintenance characteristics of facilities or,
4.	change operations or procedures of the Telephone Company.
B.	In case of any such substitution, change or rearrangement, the transmission parameters will be within the range as set forth in Section 6.4.1. The Telephone Company shall not be responsible if any such substitution, change or rearrangement renders any customer furnished services obsolete or requires modification or alteration thereof or otherwise affects their use or performance. If such substitution, change or rearrangement materially affects the operating characteristics of the facility, the customer will be given adequate notice in writing. Reasonable time will be allowed for any redesign and implementation required by the change in operating characteristics. The Telephone Company will work cooperatively with the customer to determine reasonable notification requirements.

2.4.2 Refusal and Discontinuance of Service	
A.	Unless the provisions of Section 2.4.5B apply, if the customer fails to comply with Sections 2.5.1A, 2.2.2, 2.5.2A, 2.5.5, 2.5.7 or Section 4, including any payments to be made by it on the dates and times herein specified, the Telephone Company ~~may,~~ on thirty days' written notice by *Certified U.S. Mail* to the person designated by the customer to receive such notices of noncompliance, refuse additional applications for service and/or refuse to complete any pending orders for service at any time thereafter. If the Telephone Company does not refuse additional applications for service on the date specified in the thirty days' notice, and the customer's noncompliance continues, nothing contained herein shall preclude the Telephone Company's right to refuse additional applications for service without further notice.
B.	Unless the provisions of Section 2.4.5B apply, if the customer fails to comply with Sections 2.5.1A, 2.2.2, 2.5.2A, 2.5.5, 2.5.7 or Section 4, including any payments to be made by it on the dates and times herein specified, the Telephone Company may, on thirty days written notice by *Certified U.S. Mail* to the person designated by the customer to receive such notices of noncompliance, discontinue the provision of the services involved at any time thereafter. In the case of such discontinuance, all applicable charges, including termination charges, shall become due. If the Telephone Company does not discontinue the provision of the services involved on the date specified in the thirty days notice, and the customer's noncompliance continues, nothing contained herein shall preclude the Telephone Company's right to discontinue the provision of the services involved without further notice.

2.4.3 Service-Affecting Activities	
A.	The Telephone Company will provide the customer timely notification of service-affecting activities that may occur in normal operation of its business. Such activities may include, but are not limited to: [a] *equipment or facilities additions*, [b] *removals or rearrangements*, [c] *routine preventative maintenance* and [d] *major switching machine change-out*. Generally, such activities are not individual customer service specific; they affect many customer services. No specific advance notification period is applicable to all service activities. The Telephone Company will work cooperatively with the customer to determine the reasonable notification requirements. With some emergency or unplanned service-affecting conditions, such as an outage resulting from cable damage, notification to the customer may not be possible.

2.4.4 Provision and Ownership of Telephone Numbers	
A.	The Telephone Company reserves the reasonable right to assign, designate or change telephone numbers, any other call number designations associated with Access Services, or the Telephone Company serving central office prefixes associated with such numbers, when necessary in the conduct of its business.
B.	Should it become necessary to make a change in such number(s), the Telephone Company will furnish to the customer six months notice, by *Certified U.S. Mail*, of the effective date and an explanation of the reason(s) for such change(s). In the case of emergency conditions, however, (e.g., a fire in a wire center), it may be necessary to change a telephone number without six month's notice in order to provide service to the customer.

2.4.5 Interference or Impairments	
A.	The characteristics and methods of operation of any circuits, facilities or equipment provided by other than the Telephone Company and associated with the facilities utilized to provide services under this tariff shall not interfere with or impair service over any facilities of the Telephone Company, its affiliated companies, or its connecting and concurring carriers involved in its services, cause damage to their plant, impair the privacy of any communications carried over their facilities or create hazards to the employees of any of them or the public.
B.	Except as provided for equipment or systems subject to the *FCC Part 68 Rules in 47 C.F.R. Section 68.108*, if such characteristics or methods of operation are not in accordance with the preceding paragraph, the Telephone Company will, where practicable, notify the customer that temporary discontinuance of the use of a service may be required; however, where prior notice is not practicable, nothing contained herein shall be deemed to preclude the Telephone Company's right to temporarily discontinue forthwith the use of a service if such action is reasonable under the circumstances. In case of such temporary discontinuance, the customer will be promptly notified and afforded the opportunity to correct the condition which gave rise to the temporary discontinuance.
1.	During such period of temporary discontinuance, credit allowance for service interruptions as set forth in Section 4.2 is not applicable.

2.4.6 Customer Coordination with Respect to Network Contingencies	
A.	The Telephone Company intends to work cooperatively with the customer to develop network contingency plans in order to maintain maximum network capability following natural or man-made disasters which affect telecommunications services, in accordance with *Part 64.401, Appendix A of the Federal Communications Commission's Rules and Regulations.*

2.5 Obligations of the Customer

2.5.1 Limitations	
A.	The services provided under this tariff shall be maintained by the Telephone Company. The customer or others may not rearrange, move, disconnect, remove or attempt to repair any facilities provided by the Telephone Company, other than by connection or disconnection to any interface means used, except with the written consent of the Telephone Company.
B.	The customer may not assign or transfer the use of services provided under this tariff; however, where there is no interruption of use or relocation of the services, such assignment or transfer may be made to:
1.	another customer, whether an individual, partnership, association or corporation, provided the assignee or transferee assumes all outstanding indebtedness for such services, and the unexpired portion of the minimum period and the termination liability applicable to such services, if any; or
2.	a court-appointed receiver, trustee or other person acting pursuant to law in bankruptcy, receivership, reorganization, insolvency, liquidation or other similar proceedings, provided the assignee or transferee assumes the unexpired portion of the minimum period and the termination liability applicable to such services, if any.
C.	In all cases of assignment or transfer, the written acknowledgment of the Telephone Company is required prior to such assignment or transfer which acknowledgment shall be made within fifteen days from the receipt of notification. All regulations and conditions contained in this tariff shall apply to such assignee or transferee.
D.	The assignment or transfer of services does not relieve or discharge the assignor or transferor from remaining jointly or severally liable with the assignee or transferee for any obligations existing at the time of the assignment or transfer.

2.5.2 Liability	
A.	The customer shall reimburse the Telephone Company for damages to Telephone Company facilities utilized to provide services under this tariff caused by the negligence or willful act of the customer or resulting from the customer's improper use of the Telephone Company facilities, or due to malfunction of any facilities or equipment provided by other than the Telephone Company. Nothing in the foregoing provision shall be interpreted to hold one customer liable for another customer's actions. The Telephone Company will, upon reimbursement for damages, cooperate with the customer in prosecuting a claim against the person causing such damage and the customer shall be subrogated to the right of recovery by the Telephone Company for the damages to the extent of such payment.
B.	With respect to claims of patent infringement made by third persons, the customer shall:
1.	defend, indemnify, protect and save harmless the Telephone Company from and against all claims arising out of the combining with, or use in connection with, the services provided under this tariff, any circuit, apparatus, system or method provided by the customer.
[illegible]	The customer shall defend, indemnify and save harmless the Telephone Company from and against suits, claims, losses or damages including punitive damages, attorneys' fees and court cost by third persons arising out of the construction, installation, operation, maintenance or removal of the customer's circuits, facilities, or equipment connected to the Telephone Company's services provided under this tariff, including, without limitation, Workmen's Compensation claims, actions for infringement of copyright and/or unauthorized use of program material, libel and slander actions based on the content of communications transmitted over the customer's circuits, facilities or equipment, and proceedings to recover taxes, fines, or penalties for failure of the customer to obtain or maintain in effect any necessary certificates, permits, licenses, or other authority to acquire or operate the services provided under this tariff; provided, however, the foregoing indemnification shall not apply to suits, claims, and demands to recover damages for damage to property, death or personal injury unless such suits, claims or demands are based on the tortious conduct of the customer, its officers, agents or employees.
D.	The customer shall defend, indemnify and save harmless the Telephone Company from and against any suits, claims, losses or damages, including punitive damages, attorneys' fees and court costs by the customer or third parties arising out of any act or omission of the customer in the course of using services provided under this tariff.

2.5.3 Ownership of Facilities and Theft	
A.	Facilities utilized by the Telephone Company to provide service under the provisions of this tariff shall remain the property of the Telephone Company. Such facilities shall be returned to the Telephone Company by the customer, whenever requested, within a reasonable period following the request in as good condition as reasonable wear will permit.

2.5.4 Equipment Space and Power	
A.	The customer shall furnish or arrange to have furnished to the Telephone Company, at no charge, equipment space and electrical power required by the Telephone Company to provide services under this tariff at the points of termination of such services. The selection of ac or dc power shall be mutually agreed to by the customer and the Telephone Company. The customer shall also make necessary arrangements in order that the Telephone Company will have access to such spaces at reasonable times for installing, testing, repairing or removing Telephone Company services.

2.5.5 Availability for Testing	
A.	The services provided under this tariff shall be available to the Telephone Company at times mutually agreed upon in order to permit the Telephone Company to make tests and adjustments appropriate for maintaining the services in satisfactory operating condition. Such tests and adjustments shall be completed within a reasonable time. No credit will be allowed for any interruptions involved during such tests and adjustments.

2.5.6 Coordination with Respect to Network Contingencies	
A.	The customer shall, in cooperation with the Telephone Company, coordinate in planning the actions to be taken to maintain maximum network capability following natural or man-made disasters which affect telecommunications services.

2.5.7 Balance	
A.	All signals for transmission over the services provided under this tariff shall be delivered by the customer balanced to ground except for ground start, duplex (DX) and McCulloh-Loop (Alarm System) type signaling and dc telegraph transmission at speeds of 75 baud or less.

2.5.8 Design of Customer Services	
A.	Subject to the provisions of Section 2.4.1, the customer shall be solely responsible, at its own expense for the overall design of its services and for any redesigning or rearrangement of its services which may be required because of changes in facilities, operations or procedures of the Telephone Company, minimum protection criteria or operating or maintenance characteristics of the facilities.

2.5.9 References to the Telephone Company	
A.	The customer may advise End Users that certain services are provided by the Telephone Company in connection with the service the customer furnishes to End Users; however, the customer shall not represent that the Telephone Company jointly participates in the customer's services.

2.5.10 Jurisdictional Report Requirements	
A.	When the IC orders Switched Access Service for both interstate and intrastate use, the projected interstate percentages of originating and terminating use must be provided in whole numbers to the Telephone Company.
B.	For purposes of developing the projected interstate percentages, the IC shall consider every call that enters the IC's network, directly or indirectly, at a point within the same state as the state where the called station is located to be intrastate and every call that enters the IC's network, directly or indirectly, at a point in a state different from the state in which the called station is located to be interstate.
C.	These whole number percentages will be used by the Telephone Company to apportion the originating and terminating use, rates and/or nonrecurring charges between interstate and intrastate until a revised report is received (refer to Section 2.5.10J.
D.	The projected interstate percentages of use and intrastate percentages of use described preceding, will be used to determine the charges as follows:
1.	The number of originating access minutes for a group will be multiplied by the projected interstate percentage of originating use to determine the originating interstate access minutes. The number of originating interstate access minutes so determined will be subtracted from the total number of originating access minutes for the group to determine the originating intrastate access minutes.
2.	The number of terminating access minutes for a group will be multiplied by the projected interstate percentage of terminating use to determine the terminating interstate access minutes. The number of terminating interstate access minutes as determined will be subtracted from the total number of terminating access minutes for the group to determine the terminating intrastate access minutes.
E.	For Feature Groups B and D Switched Access Service, when the call detail is adequate to determine the appropriate jurisdiction, the Telephone Company will develop the projected interstate percentage for originating access minutes by dividing the measured interstate originating access minutes, by the total originating access minutes. The projected interstate percentage will be developed on a monthly basis by end office.
F.	When an IC orders Switched Access Service for non 800 Access Service originating use, the IC shall provide a projected interstate percentage of originating use for each end office involved. These percentages will be used by the Telephone Company as the projected interstate percentages in the event that originating call details are insufficient to determine the jurisdiction for the call.

2.5.10 Jurisdictional Report Requirements	
G.	When an IC orders Feature Groups B and D for non 800 Access Service terminating use, the IC shall provide a projected interstate percentage of terminating use for each end office involved.
H.	For Feature Groups B and D used for 800 Access Services, the IC will provide separate projected interstate percentages of originating and terminating 800 Access Services use for each end office.
I.	The Telephone Company will designate the numbers obtained by subtracting the projected interstate percentage for originating access minutes and the projected interstate percentage for terminating access minutes from one-hundred as the projected intrastate percentages of use, [*e.g. 100 – projected interstate percentage of originating use = intrastate percentage of originating use*].
J.	Effective on the first of January, April, July and October of each year, the IC may update the jurisdictional report. For purposes of implementation, the IC must update the jurisdictional report in conjunction with the effective date of this tariff to reflect the originating and terminating percentages of use for the ensuing period. The IC shall forward to the Telephone Company, to be received no later than twenty calendar days after the first of each such month, a revised report showing the interstate percentages of originating and terminating use for the past three months ending the last day of December, March, June and September, respectively for each originating service and/or terminating service arranged for interstate and intrastate use.
1.	A separate revised update is required in the event the IC has outstanding orders for Feature Group A, B and D service, in order to reflect any changes in the quarterly percentages of interstate use prior to actual completion.
2.	Except as set forth in Section 2.5.10E, where jurisdiction can be determined from the call detail, the revised report will serve as the basis for the next three months billing and will be effective on the bill date in the following month [*i.e., February, May, August and November*] for that service. No prorating or back-billing will be done based on the report.
3.	If the IC does not supply the report other than the initial report, the Telephone Company will assume the percentages for originating and terminating use and/or terminating intrastate usage information to be the same as that provided in the last quarterly report. For those cases in which a quarterly report has never been received from the IC, the Telephone Company will assume the percentages of originating and terminating use and/or terminating intrastate usage information to be the same as that provided in the order for service (refer to Section 2.5.10A through C and Section 2.5.10E).

2.5.10 Jurisdictional Report Requirements	
K.	The IC reported projected interstate percentages of use will be used for the apportionment of rates or nonrecurring charges associated with Feature Groups A, B and D until the end of the quarter during which the service was activated. Thereafter, the projected interstate percentages for such apportionment and a projected estimate of terminating intrastate use for such billing will be developed quarterly by the Telephone Company based on the data used to develop the projected interstate percentages of use and the projected estimate of terminating use. Where call detail in insufficient to make such a determination, the IC reported projected interstate percentages of use and the projected estimate of terminating use as set forth in Section 2.5.10J will be used by the Telephone Company for such apportionment.
L.	For Feature Groups A, B and D, the IC reported projected interstate percentages of use will be used for the apportionment of nonrecurring charges until the end of the quarter during which the service was activated as follows:
1.	the projected interstate percentage of originating use will be used to determine the apportionment of charges for originating trunks.
2.	the projected interstate percentage of terminating use will be used to determine the apportionment of charges for terminating trunks.
3.	the average of the projected interstate percentage of originating use and the projected interstate percentage of terminating use will be used to determine the apportionment of charges for two-way lines or trunks, [i.e., originating percentage interstate use plus terminating percentage interstate use divided by two, equals average percent of interstate use for two-way trunks].
M.	The IC shall keep sufficient detail from which the percentages of interstate use for Feature Groups A, B and D, and 800 Access Service can be ascertained and upon request of the Telephone Company make the records available for inspection. Such a request will be initiated by the Telephone Company no more than once per year. The IC shall supply the data within thirty calendar days of the Telephone Company request.

2.5.11 Determination of Intrastate Charges for Mixed Interstate and Intrastate Access Service	
A.	When mixed interstate and intrastate Access Service is provided, all charges (i.e., nonrecurring, monthly and/or usage) including optional features charges, will be prorated between interstate and intrastate. The percentages (refer to Section 2.5.10) will serve as the basis for calculating the charges. The intrastate percentages will change as revised usage reports are submitted or a revised percentage is calculated as set forth in Section 2.5.10. The percentages of an Access Service to be charged as intrastate are applied in the following manner:
1.	For monthly and/or usage and nonrecurring chargeable rate elements associated with Access Services, multiply the intrastate percent times the quantity of chargeable elements times the state tariff rate per element.
2.	For usage sensitive (i.e., access minutes) chargeable rate elements, multiply the percent intrastate use times actual use (i.e., measured or Telephone Company assumed average use) times the state tariff rates.

3 Ordering of Service

Regulations, rates and charges for ordering provisions applicable to Switched Access Service offered and ordered under this tariff are the same as those set forth in *NYNEX Tariff F.C.C. No. 1, Section 5 and Section 6.1.7.* In addition, the following regulations apply.

Provisions for the cancellation of an order for service are set forth in *NYNEX Tariff F.C.C. No. 1, Section 5.2.3.*

3.1 Ordering, Rating and Billing of Access Services Where More Than One Exchange Telephone Company is Involved

3.1.1 Meet-Point Billing	
Where more than one Exchange Telephone Company is involved in the provision of Access Service the Telephone Company will handle ordering, rating and billing of Access Services under this tariff as follows. The following regulations are illustrated in Exhibit 3.1.1-1. For regulations pertaining to Feature Group C, note that as of August 21, 1992 FGC is available from end offices in operating territories of only Exchange Telephone Companies other than New England Telephone.	
A.	When service(s) is provided where one end of the Local Transport element is in the Telephone Company operating territory and the other is in another Exchange Telephone Company operating territory, the customer will provide on the first business day of each calendar month a record of usage data and the other Exchange Telephone Company associated with it. This information will be used to calculate billing.
B.	Each Exchange Telephone Company will provide the portion of the Local Transport element in its operating territory to an Interconnection Point (*IP*) with another Exchange Telephone Company and will bill the charges in accordance with its Access Service tariff. The charges for the Local Transport element will be determined as described in 3.1.1H and I All other appropriate charges in each Exchange Telephone Company tariff are applicable.
C.	The Interconnection Points (*IP*) will be determined by the Exchange Telephone Companies involved.
D.	When a WATS Access Line Service is ordered and Channel Mileage applies (*i.e., the WATS Service Office and the end user's end office are not coterminous*) and one end of the Channel Mileage element is in the Telephone Company operating territory and the other end is in another Exchange Telephone Company operating territory, the Exchange Telephone Company in whose operating territory the end office is located must receive the order from the customer. The Exchange Telephone Company in whose territory the WATS Serving Office is located must also receive a copy of the order from the customer. Each Exchange Telephone Company will provide the portion of the Channel Mileage element in its operating territory to an Interconnection Point (IP) with another Exchange Telephone Company and will bill the charges in accordance with its Access Service tariff. The rate for the Channel Mileage element will be determined as described in 3.1.1.H and I. All other appropriate charges in each Exchange Telephone Company tariff are applicable.

3.1.1 Meet-Point Billing	
E.	When Feature Group A Switched Access Service is ordered by a customer where one end of the Local Transport element is in the Telephone Company operating territory and the other end is in another Exchange Telephone Company operating territory, the Exchange Telephone Company in whose territory the first point of switching is located will accept the order.
1.	The Exchange Telephone Company in whose territory the customer point of termination is located must also receive a copy of the order from the customer.
2.	The Exchange Telephone Company that accepts the order will then determine the charges involved, arrange to provide the Access Service ordered and bill the charges in accordance with its Access Service tariff.
F.	When a Feature Group B Switched Access Service is ordered by a customer where one end of the Local Transport element is in the Telephone Company operating territory and the other end is in another Exchange Telephone Company operating territory, and when notified by the Telephone Company which accepts the order that the involved Exchange Telephone Companies cannot implement multi-company billing (*Meet Point Billing*); ordering, provisioning, rating and billing regulations, as set forth for FGA in the preceding paragraphs will also apply to Feature Group B.
G.	Except as set forth in Section 3.1.1F, when Feature Group B, C and/or D Switched Access Service and/or Directory Assistance Service is ordered by a customer where one end of the Local Transport element is in the Telephone Company operating territory and the other end is in another Exchange Telephone Company operating territory, the orders shall be received as follows:
1.	For Feature Group C and/or Directory Assistance Service, the Exchange Telephone Company in whose operating territory the end office is located must receive the order from the customer. The Exchange Telephone Company in whose territory the customer premises is located must also receive a copy of the order from the customer.
2.	For Feature Group B and/or D Switched Access Service ordered to an end office, the Exchange Telephone Company in whose operating territory the end office is located must receive the order from the customer. The Exchange Telephone Company in whose territory the customer premises is located must also receive a copy of the order from the customer.

3.1.1 Meet-Point Billing	
3.	For Feature Group B and/or D Switched Access Service ordered to an access tandem, the Exchange Telephone Company in whose territory the access tandem is located must receive the order from the customer. The Exchange Telephone Company in whose territory the customer premises is located must also receive a copy of the order from the customer.
H.	The charges for the Local Transport element and the rate for the Channel Mileage element for services provided as set forth in Sections 3.1.1D and 3.1.1G are determined as follows:
1.	Determine the appropriate Local Transport Facility or Channel Mileage by computing the airline mileage between the two ends of the Local Transport Facility or Channel Mileage element.
2.	Determine the airline mileage for the Local Transport Facility charge using the V&H Coordinate method as set forth in *National Exchange Carrier Association, Inc. Tariff F.C.C. No. 4*. Determine the airline mileage for the Channel Mileage element using the V&H Coordinate method.
I.	For Feature Groups B, C and D Switched Access Services, the Local Transport charges are determined as follows:
1.	Multiply the number of access minutes by the number of airline miles determined in Section 3.1.1H by the Telephone Company's appropriate Local Transport Facility per mile per access minute rate
2.	Multiply the product determined in *item 1* by the Telephone Company's billing percentage factor
3.	Divide the product determined in *item 2* above by one-hundred. *(The resulting amount is the total Local Transport Facility charge).*
4.	Multiply the number of access minutes by the Telephone Company's appropriate Local Transport Termination per minute rate.
5.	Divide the product determined in *item 4* above by two. *(The resulting amount is the total Local Transport Termination Charge).*
6.	Add the resulting amounts obtained in *items 4* and *6* above. *(This will result in the total Local Transport charges).*
J.	The Billing Percentage (*BP*) factor for the Telephone Company for the service between the two involved offices is listed in *National Exchange Carrier Association, Inc. Tariff F.C.C. No. 4*.

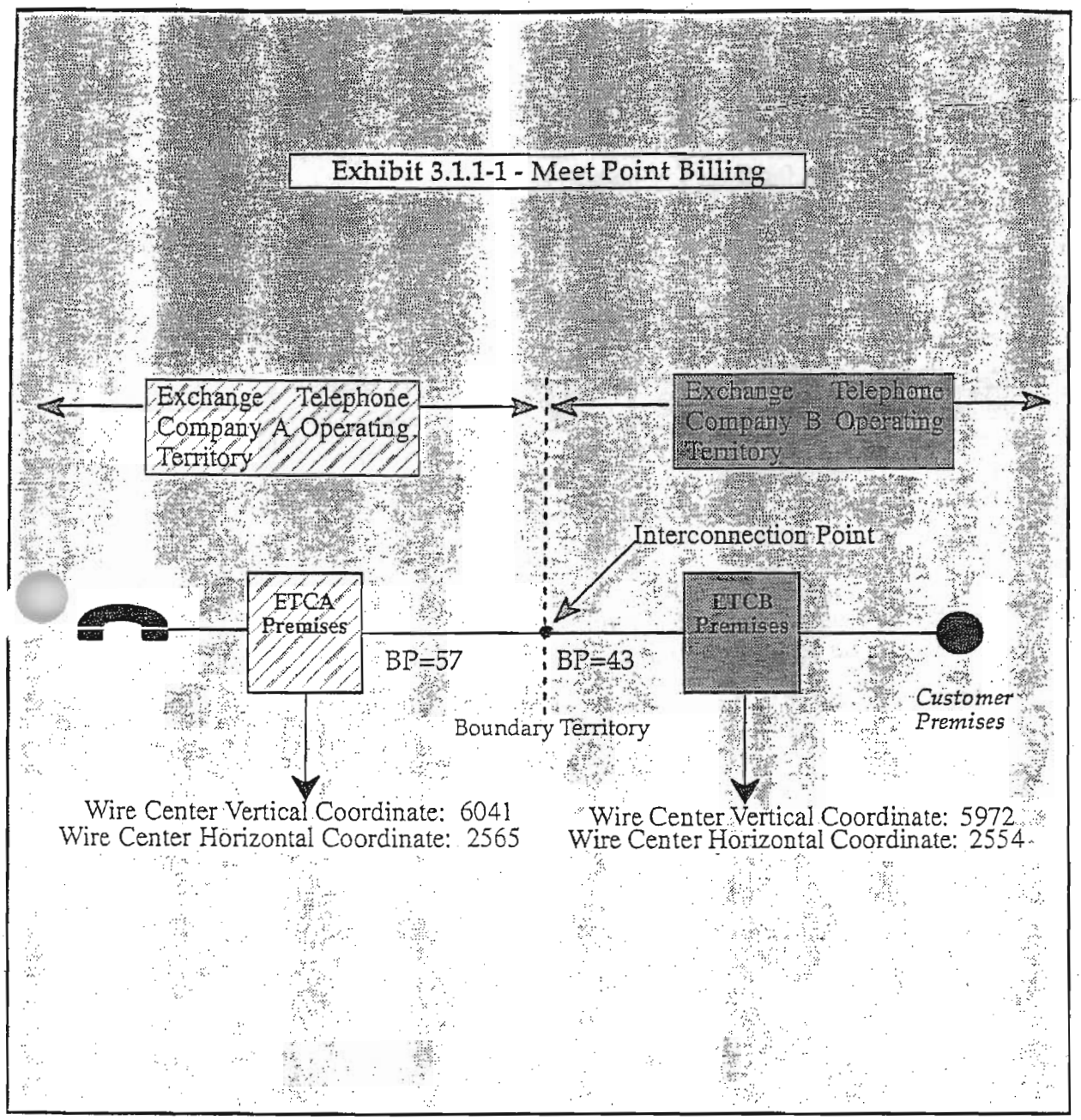
Exhibit 3.1.1-1 - Meet Point Billing
Exchange Telephone Company A Operating Territory
Exchange Telephone Company B Operating Territory
Interconnection Point
ETCA Premises
ETCB Premises
BP=57
BP=43
Boundary Territory
Customer Premises
Wire Center Vertical Coordinate: 6041
Wire Center Horizontal Coordinate: 2565
Wire Center Vertical Coordinate: 5972
Wire Center Horizontal Coordinate: 2554

4 Issuance, Payment and Crediting of Customer Bills

4.1 Undertaking of the Telephone Company

4.1.1 Billing Convention Methods	
A.	The Telephone Company shall bill on a current basis all charges incurred by and credits due to the customer under this tariff attributable to services established or discontinued or provided during the preceding billing period.
B.	The Telephone Company shall bill in advance charges for all services to be provided during the ensuing billing period except for charges associated with service usage and for the Federal Government which will be billed in arrears.

4.1.2 Late Payment Penalty	
A.	If any portion of the payment is received by the Telephone Company after the payment date (refer to Section 4.1.4), or if any portion of the payment is received by the Telephone Company in funds which are not immediately available to the Telephone Company, then a late payment penalty shall be due to the Telephone Company.
.	The late payment penalty shall be the portion of the payment not received by the payment date times a late factor. The late factor shall be:
1.	*0.0005 per day for the number of days from the payment date to and including the date that the customer actually makes the payment to the Telephone Company.*

4.1.3 Billing Periods	
A.	The billing date of a bill for a customer for Access Service provided under this tariff is referred to as the *"bill day."* The period of service each bill covers is as follows:
1.	The Telephone Company will establish a bill day each month for each customer account.
2.	The bill will cover non-usage sensitive service charges for the ensuing billing period for which the bill is rendered, any known unbilled non-usage sensitive charges for prior periods and unbilled usage charges for the period after the last bill day through the current bill day. Any known unbilled usage charges for prior periods and any known unbilled adjustments will be applied to this bill.

4.1.4 Payment Date	
A.	The payment date of bills rendered to customers for Access Service provided under this tariff is as follows:
1.	All bills dated as set forth in Section 4.1.3 for service, provided to the customer by the Telephone Company, are due thirty-one days after the bill day or by the next bill date (i.e., same date in the following month as the bill date), whichever is the shortest interval, except as provided herein.
2.	If such payment date would cause payment to be due on a Sunday or on a legal holiday which is observed on a Monday, the payment date shall be the first non-holiday day following such Sunday or legal holiday.
3.	If such payment date falls on a Saturday or on a legal holiday which is observed on Tuesday, Wednesday, Thursday or Friday, the payment date shall be the last non-holiday day preceding such Saturday or legal holiday.
B.	If payment is not received by the payment date or if payment is not in immediately available funds, a late payment penalty will apply (refer to Section 4.1.2).

[illegible] Medium of Payment	
[illegible]	Bills are payable in immediately available funds.
1.	**Immediately Available Funds** denotes a corporate or personal check drawn on a bank account and funds which are available for use by the receiving party on the same day on which they are received and include U.S. Federal Reserve bank wire transfers, U.S. Federal Reserve notes (paper cash), U.S. coins, U.S. Postal Money Orders and New York Certificates of Deposit.

4.1.6 Customer Deposits	
A.	The Telephone Company will, in order to safeguard its interests, require only a customer which has a proven history of late payments to the Telephone Company or does not have established credit except for a customer which is a successor of a company which has established credit and has no history of late payments to the Telephone Company, to make a deposit prior to or at any time after the provision of a service to the customer to be held by the Telephone Company as a guarantee of the payment of rates and charges.
B.	Such deposit may not exceed the actual or estimated rates and charges for the service for a two month period.
C.	The fact that a deposit has been made in no way relieves the customer from complying with the Telephone Company's regulations as to the prompt payment of bills.
D.	At such time as the provision of the service to the customer is terminated, the amount of the deposit will be credited to the customer's account and any credit balance which may remain will be refunded.
E.	At the option of the Telephone Company, such a deposit will be refunded or credited to the customers' account when the customer has established credit or after the customer has established a one year prompt payment record at any time prior to the termination of the provision of the service to the customer.
F.	In case of a cash deposit, for the period the deposit is held by the Telephone Company, the customer will receive interest at the same percentage rate as that set forth in Section 4.1.2 B. Interest will accrue for the number of days from the date the customer deposit is received by the Telephone Company to and including the date such deposit is credited to the customer's account or the date the deposit is refunded by the Telephone Company.
G.	Should a deposit be credited to the customer account, as indicated above, no interest will accrue on the deposit from the date such deposit is credited to the customer's account.

4.1.7 Nonrecurring Charges	
A.	At the option of the customer, all nonrecurring charges associated with a Standard or Negotiated Interval Access Order may be billed over a three month period in monthly installments subject to the following:
1.	All nonrecurring charges associated with a given Access Order must be billed in monthly installments.
2.	The total of the nonrecurring charges associated with a given Access Order must be $500.00 or more.
3.	50% of the total nonrecurring charges will be billed in the first monthly billing period after the charges are incurred, and 25% of the total nonrecurring charges plus a Service Charge will be billed in each of the following two monthly billing periods. The Service Charge is a fraction of the total remaining nonrecurring charges. The Service Charge is calculated as follows: 30 times the decimal value set forth in Section 4.1.2B, times the total remaining nonrecurring charges = the service charge.
4.	The customer must request installment billing on or before the Application Date for a Standard or Negotiated Interval Access Order. The customer may elect to pay the unbilled charges before the expiration of the installment plan. More than one installment plan may be in effect for the same customer at the same time. If the customer disconnects service before the expiration of the plan period, all unbilled charges plus a Service Charge, if applicable, will be included in the final bill rendered.
B.	Nonrecurring Charges do not apply for the re-establishment of service following a fire, flood or other occurrence attributed to an Act of God provided that:
1.	The service is of the same type as was provided prior to the fire, flood and other occurrence.
2.	The service is for the same customer and the service is at the same location on the same premises.
3.	The re-establishment of service begins within sixty days after Telephone Company service is available. The sixty day period may be extended a reasonable period if the renovation of the original location on the premises affected is not practical within the allotted time period.
C.	Nonrecurring charges apply for establishing service at a different location on the same premises or at a different premises pending re-establishment of service at the original location.

4.1.8 Billing Dispute	
In the event that a billing dispute occurs concerning any charges billed to the customer by the Telephone Company the following regulations will apply:	
A.	The first day of the dispute shall be the date on which the customer furnishes the Telephone Company with the account number under which the bill has been rendered, the date of the bill and the specific items on the bill being disputed.
B.	The date of resolution shall be the date on which the Telephone Company completes its investigation of the dispute, notifies the customer of the disposition and, if the billing dispute is resolved in favor of the customer, applies credit for the correct disputed amount, the disputed amount penalty and/or late payment penalty as appropriate.
C.	If a billing dispute is resolved in favor of the Telephone Company, any payments withheld pending resolution of the dispute shall be subject to the late payment penalty. Further, the customer will not receive credit for the disputed amount of the disputed amount penalty.
D.	If a customer disputes a bill within three months of the payment date and pays the total billed amount on or before the payment date and the billing dispute is resolved in favor of the customer, the customer will receive a credit for a disputed amount penalty from the Telephone Company for the period starting with the date of payment and ending on the date of resolution. The credit for the disputed amount penalty shall be as set forth following.
E.	If a customer disputes a bill within three months of the payment date and pays the total billed amount after the payment date and the billing dispute is resolved in favor of the customer, the customer will receive a credit for a disputed amount penalty from the Telephone Company for the period starting with the date of payment and ending on the date of resolution. The credit for the disputed amount penalty shall be as set forth following. The late payment penalty (refer to Section 4.1.2) applied to the disputed amount resolved in the customer's favor will be credited.
F.	If a customer disputes a bill within three months of the payment date and does not pay the disputed amount or does not pay the billed amount (*i.e., the nondisputed and disputed amount*), and the billing dispute is resolved in favor of the customer, the customer will not receive a credit for a disputed amount penalty from the Telephone Company. The late payment penalty (refer to Section 4.1.2A and 4.1.2B) applied to the disputed amount resolved in the customer's favor will be credited.

4.1.8 Billing Dispute	
G.	If a customer disputes a bill after three months from the payment date and pays the total billed amount on or before the dispute date, and the billing dispute is resolved in favor of the customer, the customer will receive a credit for a disputed amount penalty from the Telephone Company for the period starting with the date of dispute and ending on the date of the resolution. The credit for a disputed amount penalty shall be as set forth following. The customer shall not receive a credit for the late payment penalty.
H.	If a customer disputes a bill after three months from the payment date and does not pay the disputed amount or does not pay the billed amount (*i.e., the nondisputed amount and disputed amount*) and the billing dispute is resolved in favor of the customer, the customer will not receive a credit for a disputed amount penalty from the Telephone Company. However, if the customer pays the disputed amount or the billed amount after the date of dispute and before the date of resolution, the customer will receive a credit for a disputed amount penalty from the Telephone Company for the period starting with the date of payment and ending on the date of resolution. The credit for the disputed amount shall be as set forth following. The customer will receive a credit for the late payment penalty, if applicable, from the Telephone Company. The late payment penalty credit shall be the disputed amount resolved in the customer's favor times a late payment penalty factor (refer to Section 4.1.2), for the period starting with the date of dispute and ending on the date of payment of the disputed amount or the date of resolution whichever occurs first.
I.	The disputed amount penalty shall be the disputed amount resolved in the customer's favor times a penalty factor. The penalty factor shall be:
1.	*0.0005 per day for the number of days from the first date to and including the last date of the period involved.*

4.1.9 Billing Adjustments and Verification	
A.	Adjustments for the quantities of services established or discontinued in any billing period beyond the minimum period set forth for services in other sections of this tariff will be prorated to the number of days or major fraction of days based on a thirty day month. The Telephone Company will, upon request and if available, furnish such detailed information as may reasonably be required for verification of any bill.

4.1.10 Computation of Billed Charges	
A.	When a rate as set forth in this tariff is shown to more than two decimal places, the charges will be determined using the rate shown. The resulting amount will then be rounded to the nearest penny (*i.e., rounded to two decimal places*).

4.1.11 Additional Copies of Bills	
A.	When more than one copy of a customer bill for services provided under the provisions of this tariff is furnished to the customer, an additional charge applies for each additional copy of the bill as set forth in Section 13.

4.1.12 Meet-Point Billing
Where more than one Exchange Telephone Company is involved in the provision of Access Service, the Telephone Company will bill such Access Services in accordance with the regulations set forth in Section 3.1 *"Ordering, Rating and Billing of Access Services Where More Than One Exchange Telephone Company is Involved."*

4.2 Credit Allowance Conditions

4.2.1 Service Interruptions	
A.	A service is interrupted when it becomes unusable to the customer because of a failure of a facility component used to furnish service under this tariff or in the event that the protective controls applied by the Telephone Company result in the complete loss of service by the customer as described in *NYNEX Tariff F.C.C. No. 1, Section 6.5.1.* An interruption period starts when an inoperative service is reported to the Telephone Company and ends when the service is operative.
B.	No credit allowance will be made for:
1.	Interruptions caused by the negligence of the customer.
2.	Interruptions of a service due to the failure of equipment or systems provided by the customer or others.
3.	Interruptions of a service during any period in which the Telephone Company is not afforded access to the premises where the service is terminated.
4.	Interruptions of a service when the customer has released that service to the Telephone Company for maintenance purposes, to make rearrangements, or for the implementation of an order for a change in the service during the time that was negotiated with the customer prior to the release of that service. Thereafter, a credit allowance (set forth further in Section 4.2.1C), will apply.
5.	Periods when the customer elects not to release the service for testing and/or repair and continues to use it on a impaired basis.
6.	Periods of temporary discontinuance as set forth in Section 2.4.5B.
7.	An interruption or a group of interruptions, resulting from a common cause, for amounts of less than one dollar.

4.2.1 Service Interruptions	
C.	In case of an interruption to any service, if not due to the negligence of the customer, allowance for the interruption shall be as follows:
1.	For Switched Access Service no credit shall be allowed for an interruption of less than twenty-four hours. The customer shall be credited for an interruption of twenty-four hours or more at the rate of 1/30 of the sum of: either any applicable monthly rates, or the assumed minutes of use charge; when applicable for the service involved, for each period of twenty-four hours or major fraction thereof that the interruption continues.
2.	The credit allowance(s) for an interruption or for a series of interruptions shall not exceed the sum of: [a] *either any applicable monthly rate,* or [b] *the assumed minutes of use charge;* whichever is applicable for the service involved, for the service interrupted in any one monthly billing period.
D.	Should the customer elect to use an alternative service provided by the Telephone Company during the period that a service is interrupted, the customer must pay the tariffed rates and charges for the alternative service used.
E.	In certain instances, the customer may be requested by the Telephone Company to surrender a service for purposes other than maintenance, testing or activity relating to a service order. If the customer consents, a credit allowance will be granted.
1.	The credit allowance will be 1/1440 of the monthly rate for each period of thirty minutes or fraction thereof that the service is surrendered. In no case will the credit allowance exceed the monthly rate for the service surrendered in any one monthly billing period.

5 Carrier Common Line Access Service

5.1 General

The Telephone Company will provide Carrier Common Line Access Service to customers in conjunction with Switched Access Service provided in Section 6.

Carrier Common Line Access provides for the use of end users' Telephone Company provided common lines by customers for access to such end users to furnish Intrastate Communications. Carrier Common Line Access also provides for the use of Switched Access Service terminating in 800 Access Line Service.

Carrier Common Line Access Service is billed to each Switched Access Service provided under this tariff in accordance with the regulations as set forth herein and in Section 4.1, and at the rates and charges contained in Section 30.5.

5.1.1 Limitations	
A.	A telephone number is not provided with Carrier Common Line Access.
B.	Detail billing is not provided for Carrier Common Line Access.
C.	Directory listings are not included in the rates and charges for Carrier Common Line Access.
D.	Intercept arrangements are not included in the rates and charges for Carrier Common Line Access.
E.	All trunk side connections provided in the same access group will be limited to the same features and operating characteristics.
F.	All line side connections provided in the same access group will be limited to the same features and operating characteristics.

5.2 Undertaking of the Telephone Company

5.2.1 Scope	
A.	Where the customer is provided with Switched Access Service under this tariff, the Telephone Company will provide the use of Telephone Company common lines by a customer for access to end user.
B.	When the customer reports interstate and intrastate use of Switched Access Service, the associated Carrier Common Line Access used by the customer for both interstate and intrastate will be apportioned as set forth in Section 5.5.2C.
C.	When the customer is provided Operator Trunk-Full Feature for sent-paid pay telephone access as set forth in Section 6, the Telephone Company will collect sent-paid monies from pay telephone stations and will remit monies to the customer as set forth in Section 5.4. The Telephone Company will provide the message call detail format and bill periods used to determine the monies upon request from the customer.

5.3 Obligations of the Customer

5.3.1 Reselling MTS/MTS–type Service	
A.	Where the customer is reselling MTS and/or MTS–type service(s) on which the Carrier Common Line Access and Switched Access charges have been assessed, the customer will obtain Feature Groups A, B or D Switched Access Service under this Tariff (*refer to Section 6*) for originating and/or terminating access in the local exchange.
1.	Such access group arrangements whether single trunks or trunk groups will have Carrier Common Line Access Charges applied.

5.3.2 Customer Facilities	
A.	The customer facilities at the premises of the ordering customer shall provide the necessary on-hook and off-hook supervision.

5.3.3 Furnishing of Call Detail	
A.	Where Operator Trunk-Full Feature for sent-paid pay telephone access is provided to the customer and the customer wishes to receive the monies it is due for the monies collected by the Telephone Company from coin pay telephone stations, the Customer will furnish to the Telephone Company, at a location specified by the Telephone Company, the Customer message call detail for the Customer sent paid (coin) pay telephone calls in accordance with the Telephone Company collection schedule.
1.	The Customer message call detail furnished shall be in a standard format established by the Telephone Company. The Telephone Company will provide to the Customer the precise details of the required standard format. If, in the course of Telephone Company business, it is necessary to change the standard format, the Telephone Company will provide notification to the involved Customer six months prior to the change.
2.	If no Customer message call detail is received from the Customer for each bill period established by the Telephone Company, the Telephone Company will assume there were no Customer sent-paid (*coin*) pay telephone calls for the period.
3.	In addition the Customer shall furnish a schedule of its charges for sent-paid (*coin*) calls to the Telephone Company at a location and date as specified by the Telephone Company. Any change in the Customer's schedule of charges shall be furnished to the Telephone Company one day after the change becomes effective.

5.4 Coin Revenue Payment Arrangements

The Telephone Company will collect the monies from coin pay telephone stations and will determine and remit amounts due to a Customer which is provided Operator Trunk-Full Feature for sent-paid pay telephone access (which are described in Section 6.2.3B), as follows.

5.4.1 Bill Period Coin Revenue	
A.	The Telephone Company will establish a collection schedule for each coin pay telephone station and will collect the monies from the coin pay stations based on this collection schedule.
1.	The monies collected based on this schedule during each bill period established by the Telephone Company will be identified by coin pay telephone station and summed to develop the Bill Period Coin Revenue for each coin record day (i.e., the day a record is prepared and dated to show the amount due the Customer).

5.4.2 Total Customer Coin Revenue	
	The intrastate Total Customer Coin Revenue will be determined by the Telephone Company based on the customer message call detail received from the customer for each bill period and the Customer's schedule of charges for sent-paid coin calls. Such Total Customer Coin Revenue will be developed each coin record day.

5.4.3 Coin Revenue Recourse Adjustments	
A.	For each coin record day, the Telephone Company will subtract from the Total Customer Coin Revenue an amount for coin station shortages.
B.	Coin station shortages are amounts resulting from unauthorized calling at coin pay telephone stations, use of unauthorized coins (i.e., foreign coins, slugs and improper use of U.S. pennies), unauthorized removal of coins from coin pay telephone stations and coin refunds beyond the Telephone Company's control.
C.	Such amount for coin station shortages will be developed by the Telephone Company by multiplying the Total Customer Coin Revenue for each coin record day by a shortage factor. Such amount will be rounded to the nearest penny. The shortage factor will be determined by dividing the yearly total coin shortage amount by the yearly total coin revenue amount (i.e., total coin revenue equals the coin revenue due under exchange tariffs, state toll tariffs and interstate toll tariffs).
D.	The total coin shortage amount and the total revenue amount will be determined by the Telephone Company through an annual special study.

5.4.4 Net Customer Coin Revenue	
A.	The Telephone Company will determine the Net Customer Coin Revenue for each coin record day by subtracting from the Total Customer Coin Revenue, the amount for coin station shortages. On the date (*payment date*) determined by adding forty-five days to the coin record day, the Telephone Company will remit payment to the Customer for the Net Customer Coin Revenue.

5.4.5 Coin Revenue Audit Provisions	
A.	Upon reasonable written notice by the Customer to the Telephone Company, the Customer will have the right through its authorized representative to examine and audit, during normal business hours and at reasonable intervals as determined by the Telephone Company, all such records and accounts as may under recognized accounting practices contain information bearing upon the determination of the amount payable to the Customer.
B.	Adjustment will be made by the proper party to compensate for any errors or omissions disclosed by such examination or audit. Neither such right to examine and audit nor the right to receive such adjustment shall be affected by any statement to the contrary, appearing on checks or otherwise, unless such statement expressly waiving such right appears in a letter signed by the authorized representative of the party having such right and delivered to the other party.
C.	All information received or reviewed by the Customer or its authorized representative is to be considered confidential and is not to be distributed, provided or disclosed in any form to anyone not involved in the audit, nor is such information to be used for any other purpose.

5.5 Rate Regulations

5.5.1 Application of Rates and Charges	
Except as set forth herein, all Switched Access Service provided to the customer will be subject to Carrier Common Line Access charges.	
A.	When access to the local exchange is required to provide a customer service (*e.g., MTS-type, Telex, Data, etc.*) that uses resold IC's private line service, Switched Access service rates and regulations as set forth in Section 6 will apply except when such access to the local exchange is required for the provision of an enhanced service. Carrier Common Line Access rates and charges as set forth in Section 30.5 apply.
B.	The Switched Access service provided by the Telephone Company includes the Switched Access service provided for both interstate and intrastate communications. The Carrier Common Line Access rates and charges as set forth in Section 30.5 will be billed to each Switched Access service provided under this tariff in accordance with Sections 4.1 and 5.5.2.
C.	Where Switched Access services connect with private line type services at Telephone Company designated WATS Serving Offices for provision of WATS or WATS-type services, Switched Access service minutes which are carried on that end of the service (i.e., originating minutes for outward WATS and WATS-type services) will be assessed Carrier Common Line Access per minute charges.

5.5.2 Determination of Charges	
A.	When Carrier Common Line Access is provided in association with Feature Groups A or B Switched Access Service in Telephone Company offices that are not equipped for measurement capabilities, assumed average intrastate access minutes will be used to determine Carrier Common Line Access charges. The assumed access minutes are as set forth in Section 6.4.3.
B.	When access minutes are used to determine Carrier Common Line Access charges, they will be accumulated using call detail recorded by Telephone Company equipment.
1.	The Telephone Company measuring and recording equipment will be associated with end office or local tandem switching equipment and will record originating access minutes and terminating access minutes where answer supervision is received.
2.	The accumulated access minutes will be summed on a line by line basis, by line group or end office, whichever type of account is used by the Telephone Company, for each customer and then rounded to the nearest minute.

5.5.2 Determination of Charges	
C.	When the customer reports interstate and intrastate use of Switched Access Service, the Carrier Common Line access minutes developed by the Telephone Company, will be multiplied by percentages reported by the customer (refer to Section 2.5.10). The result will then be used to determine the Carrier Common Line Charges. The charges for the involved customer account will be determined as stated in the following paragraphs.
1.	The access minutes for all Switched Access Service subject to Carrier Common Line charges will be multiplied by the per minute rate.
2.	The Terminating Switched Access per minute charge applies to all non-800 Access terminating access minutes of use. The Terminating Switched Access per minute charge also applies to all terminating 800 Access minutes of use which terminate on a common line. The number of such minutes will be obtained from reports furnished by the customer (refer to Section 2.5.10).
3.	The Terminating 800 Access Service per minute charge applies to all 800 terminating usage which terminates in a WATS Access Line Service as provided from *NYNEX Tariff F.C.C. No. - 1*. The number of such minutes will be obtained from reports furnished by the customer (refer to Section 2.5.10).
4.	The Originating Switched Access per minute charge applies to all non-800 originating access minutes of use less those originating access minutes of use associated with FGA Access Services where the off-hook supervisory signaling is forwarded by the customer's equipment when the called party answers.
5.	The Originating 800-specific Access per minute charge applies to all originating access minutes of use associated with calls placed to 800 numbers. The originating 800-specific Access per minute charge also applies to all originating usage which terminates in a WATS Access Line Service as provided from *NYNEX Tariff F.C.C. No. - 1*. The number of such minutes will be obtained from reports furnished by the customer (refer to Section 2.5.10).

6 Switched Access Service

6.1 General

Switched Access Service is ordered under the Access Order provisions set forth in Section 3 and billed at the rates and charges set forth in Section 30.

In addition to regulations which are contained within this Tariff, other regulations specified in NYNEX Tariff F.C.C. No. 1, Section 6 apply as appropriate (unless otherwise stated in this tariff) for the services specified in Section 6.1.1 of this tariff.

6.1.1 Service Structure	
A.	The Switched Access Services provided under this tariff are: [a] originating, terminating or two-way Feature Groups A, B and D, and [b] 800 Access.
B.	There are three rate categories which apply to Switched Access ~~Service: [a]~~ **Local Transport** *(described in Section 6.2.1)*, [b] **Local Switching** *(described in Sections 6.2.2 and 6.2.3)*, and [c] **Common Line** *(described in Section 5)*.
C.	WATS Access Line service is a type of Special Access service that is provided for use with Feature Groups B and/or D. WATS Access Line Service connects an End User premises with a WATS or WATS-type Serving Office (*WSO*). This service is ordered and provisioned under *NYNEX Tariff F.C.C. No. 1*, Section 7.

6.1.2 Manner of Provision	
A.	Regulations pertaining to the provision of Switched Access Feature Groups provided under this tariff are the same as those set forth in *NYNEX Tariff F.C.C. No. 1*, Section 6.2. In addition to those regulations, the following apply.
B.	At the request of the customer, the Telephone Company will provide to the customer the makeup of the facilities and services provided from the customer's premises to the first point of switching. This information will be provided in the form of a Design Layout Report. The Design Layout Report will be provided to the customer at no charge, and will be reissued or updated whenever these facilities are materially changed.
C.	At no additional charge, the Telephone Company will, at the customer's request, cooperatively test, at the time of installation, the following parameters: Loss, C-Message Noise, 3-Tone Slope, dc Continuity and Operational Signaling. When the Local Transport is provided with Interface Groups 2, 6, 7 and 9 and the Local Transport Termination is two-wire (there is a four-wire to two-wire conversion in Local Transport), balance parameters (*Equal Level Echo Path Loss*) may also be tested.
D.	Any customer may request that the facilities used to provide Switched Access Service be specially routed. The regulations for Special Access Facilities Routing (*i.e., Avoidance, Diversity and Cable-only*) are set forth in Section 11.

6.2 Rate Categories

The following illustration shows the *Local Transport, Local Switching* and *Carrier Common Line* categories combined to provide a complete access service. A description of each category is contained in the following subsections.

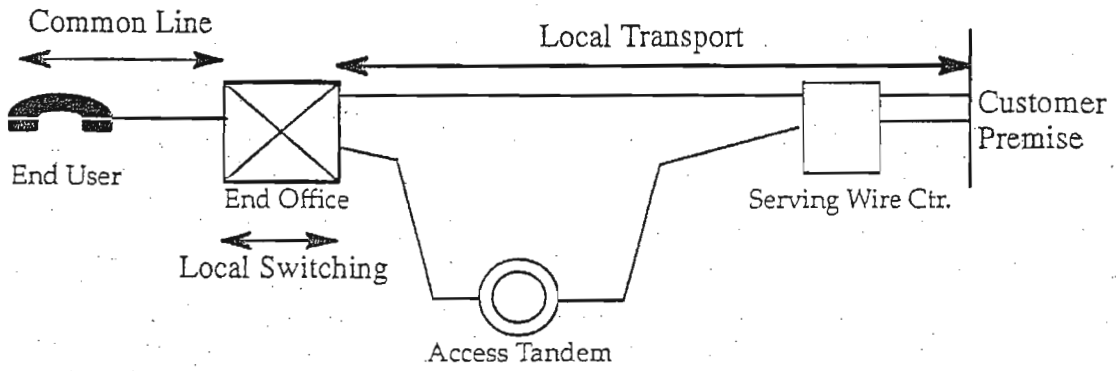

6.2.1 Local Transport	
A.	Local Transport provides the transmission facilities between the customer's premises and the end office switch(es) where the customer's traffic is switched to originate or terminate its communications.
B.	Local Transport is a two-way voice frequency transmission path composed of facilities determined by the Telephone Company.
1.	The two-way voice frequency transmission path permits the transport of calls in the originating direction (from the end user end office switch to the customer's premises) and in the terminating direction (from the customer's premises to the end office switch), but not simultaneously.
2.	The voice frequency transmission path may be comprised of any form or configuration of plant capable of and typically used in the telecommunications industry for the transmission of voice and associated telephone signals within the frequency bandwidth of approximately 300 to 3000 Hz.
C.	The Telephone Company will work cooperatively with the customer in determining:
.	whether the service is to be directly routed to an end office switch or through an access tandem switch,
2.	whether the service is to be routed through a TOPS tandem switch, and
3.	the directionality of the service.
D.	The Local Transport mileage for access minutes which originate (*i.e., FGD*) from or terminate (*i.e., FGB and D*) to a WATS Access Line Service will be calculated on an airline basis, using the V&H Coordinates method as set forth in *National Exchange Carrier Association Inc. Tariff F.C.C. No. 4 for Wire Center Interconnection Information*, between the WATS Serving Office at which the WATS Access Line Service terminates and the customer premises serving wire center for the FGB or D Service provided. For purposes of determining Local Transport mileage, distance will be measured from the wire center that normally serves the customer to the end office switch(es). Exceptions to the mileage measurement rules are set forth in Section 6.4.4. When FGB usage originating from or terminating to a WATS Access Line Service is transported over a FGB trunk for which assumed minutes of use are billed, the Local Transport mileage for such usage will be calculated in accordance with the V&H Coordinates method.

6.2.1 Local Transport	
E.	The Local Transport rate category is comprised of a *Local Transport Termination rate*, a *Local Transport Facility rate* and, when applicable, an *Operator Passthrough Charge*. The application of these rates is set forth in Section 6.6.
1.	The Local Transport Termination rate provides for that portion of the voice frequency transmission path at the end office switch, and at the customer's premises.
2.	The Local Transport Facility rate provides for that portion of the voice frequency transmission path between the end office switch and the customer's premises.
3.	The Telephone Company will provide end users with access to the operators of a customer for operator assisted call completion as desired. If the customer provides operator services for its end users for calls originating from within the LATA and is capable of receiving calls passed through to it in the LATA by the Telephone Company, the customer will be assessed an Operator Passthrough Charge that will include the costs associated with handling the operator services traffic.
F.	**Interface Groups** - Descriptions as well as regulations pertaining to Interface Groups which are applicable to the Switched Access Feature Groups offered under this tariff are the same as those set forth in *NYNEX Tariff F.C.C. No. 1*, Section 6.
G.	**Non-Chargeable Optional Features** - Where transmission facilities and/or parameters permit, and where signaling conversion is required by the customer to meet its signaling capability, the Telephone Company will provide the customer Supervisory Signaling arrangement for each transmission path, or other optional features, as follows.
1.	**Interface Groups 1 and 2** DX Supervisory Signaling, E&M Type 1 Supervisory Signaling, E&M Type 2 Supervisory Signaling, or E&M Type 3 Supervisory Signaling.
2.	**Interface Group 2** SF Supervisory Signaling or Tandem Supervisory Signaling.
3.	**Interface Groups 6, 7 and 9** These Interface groups, at the option of the customer, may be provided with individual transmission path SF Supervisory Signaling where such signaling is available in Telephone Company central offices. Generally such signaling is available only where the entry switch provides an analog, (*i.e., non-digital*), interface to the transport termination and a portion of the facility between the analog entry switch and the customer's premises is analog.

6.2.1 Local Transport	
4.	**Customer Specified Entry Switch Receive Level** allows the customer to specify the receive transmission level at the first point of switching. The range of transmission levels which may be specified is described in *TR-NWT-000334*. This is available with Interface Groups 2, 6, 7 and 9 for FGA and FGB.
5.	**Customer Specification of Local Transport Termination** allows the customer to specify, for FGB routed directly to an end office or access tandem, a four-wire termination of the Local Transport at the entry switch in lieu of a Telephone Company selected two-wire termination. This is available only when the FGB arrangement is provided with Type B Transmission Specifications.

6.2.2 Local Switching

A. Local Switching provides for the use of common lines and the local end office switching and end user termination functions necessary to complete the transmission of Switched Access communications to the end users served by the local end office. The Local Switching functions are: [a] *Local Access*, [b] *Line Termination*, and [c] *Intercept*.

1. **Local Access** provides for the use of end office switching equipment. There are two Local Access functions: [a] Common Switching and [b] Transport Termination.

   Common Switching provides the local end office switching functions associated with the various Feature Group switching arrangements. The Common Switching arrangements provide for originating, terminating or two way FGA, FGB, and FGD. Included as part of Common Switching are optional features which the customer can order to meet the Customer's specific communications requirements.

   Transport Termination provides for the line or trunk side arrangements which terminate the Local Transport facilities. Included as part of Transport Termination are various nonchargeable optional termination arrangements. The number of Transport Terminations provided will be determined by the Telephone Company as set forth in *NYNEX Tariff F.C.C. No. 1*, Section 6.5.6.

   Line Termination provides the terminations for the end user lines terminating in the local end office.

3. **Intercept** provides for the termination of a call at a Telephone Company Intercept operator or recording. The operator or recording tells a caller why a call, as dialed, could not be completed, and if possible, provides the correct number.

6.2.3 Local Switching Optional Features

Optional Features are available in lieu of, or in addition to the features provided with the Feature Groups. Optional Features are provided as Common Switching, Transport Termination or WATS Access Line Service Terminations and are as follows:

A. Common Switching

1. **Call Denial on Line or Hunt Group** allows for the screening of terminating calls within the LATA, and for the completion only of calls to 411, 911, 800, 555-1212 and a Telephone Company specified set of NXXs within the Telephone Company local exchange calling area of the dial tone office in which the arrangement is provided. All other toll calls are routed to a reorder tone or recorded announcement. This feature is provided in all Telephone Company end offices. It is available with FGA.

2. **Service Code Denial on Line or Hunt Group** allows for the screening of terminating calls within the LATA, and for disallowing completion of calls to 0– and N11. This feature, where available, is provided in all Telephone Company end offices. It is available with FGA.

3. **Hunt Group Arrangement** provides the ability to sequentially access one of two or more line side connections in the originating direction, when the access code of the line group is dialed. This feature is provided in all Telephone Company end offices. It is available with FGA. FGA services provided by multiple customers to the same end user may not be combined in a single hunt group unless the Local Transport Facility mileage is the same for each customer (i.e., the distance between each customer's serving wire center and the first point of switching [dial tone office], to which the FGA services are ordered) is the same.

4. **Uniform Call Distribution Arrangement** provides a type of multi-line hunting arrangement which provides for an even distribution of calls among the available lines in a hunt group. Where available, this feature is provided in Telephone Company electronic end offices only. It is available with FGA.

5. **Nonhunting Number for Use With Hunt Group or Uniform Call Distribution Arrangement** provides an arrangement for an individual line within a multi-line hunt or uniform call distribution group that provides access to that line within the hunt or uniform call distribution group when it is idle or provides busy tone when it is busy, when the nonhunting number is dialed. Where available, this feature is provided in Telephone Company electronic end offices only. It is available with FGA.

6.2.3 Local Switching Optional Features	
A.	Common Switching
6.	**Up to Seven Digit Outpulsing of Access Digits To Customer** provides for the end office capability of providing up to seven digits of the uniform access code (950-0XXX or 950-1XXX) to the customer premises. The customer can request that only some of the digits in the access code be forwarded. The access code digits would be provided to the customer's premises using Multifrequency Signaling, and transmission of the digits would precede the forwarding of *ANI* if that feature were provided. It is available as a nonchargeable option with FGB.
7.	**Service Class Routing** provides the capability of directing originating traffic from an end office to a trunk group to a customer designated premises, based on the line class of service (e.g., coin, multi-party or hotel/motel), service prefix indicator (e.g., 0– or 0+) or service access code (e.g., 800). It is provided in suitably equipped end office or access tandem switches and is available as a nonchargeable option with FGD.
8.	**Alternate Traffic Routing-Multiple Customer Premises** provides the capability of directing originating traffic from an end office (or appropriately equipped access tandem) to a trunk group (*the high usage group*) to a customer designated premises until that group is fully loaded, and then delivering additional originating traffic (*the overflowing traffic*) from the same end office or access tandem to a different trunk group (*the final group*) to a second customer designated premises. The customer shall specify the last trunk CCS desired for the high usage group. It is provided in suitably equipped end office or access tandem switches and is available as a non-chargeable option with FGB and FGD.
9.	**Alternate Traffic Routing-End Office Alternate Routing When Ordered in Trunks** provides an alternate routing arrangement for customers who order in trunks and have access for a particular Feature Group to an end office via two routes: one route via an access tandem and one direct route. The feature allows the customer's originating traffic from the end office to be offered first to the direct trunk group and then overflow to the access tandem group. It is provided in suitably equipped end offices and is available as a nonchargeable option with FGB and FGD.

.2.3 Local Switching Optional Features

A. Common Switching

10. **Band Advance Arrangement for Use With WATS Access Line Service** - This option which is provided in association with two or more WATS Access Line Service groups, provides for the automatic overflow of terminating calls to a WATS Access Line Service group, when that group has exceeded its call capacity, to another WATS Access Line Service group with a band designation equal to or greater than that of the overflowing WATS Access Line Service group. This arrangement does not provide for call overflow from a group with a higher band designation to one with a lower one. This option is available as a nonchargeable option with FGD.

11. **End Office End User Line Service Screening for Use With WATS Access Line Service** provides the ability to verify that a customer has dialed a called party address (*by screening the called NPA and/or NXX on the basis of geographical bands selected by the Telephone Company*) which is in accordance with that end user's service agreement with the customer, (i.e., WATS). This option is provided in all Telephone Company end offices in which WATS Access Line Service is provided. It is available as a nonchargeable option with FGD.

12. **Hunt Group Arrangement for Use With WATS Access Line Service** provides the ability to sequentially access one of two or more WATS Access Line Services (*i.e. 800 Service access lines*) in the terminating direction, when the hunting number of the WATS Access Line Service group is forwarded from the customer to the Telephone Company. This feature is provided in all Telephone Company end offices in which WATS Access Line Service is provided. It is available as a nonchargeable option with FGB and FGD.

13. **Uniform Call Distribution Arrangement for Use With WATS Access Line Service** provides a type of multi-line hunting arrangement which provides for an even distribution of terminating calls among the available WATS Access Line Services in the hunt group. Where available, this feature is only provided in Telephone Company electronic end offices in which WATS Access Line Service is provided. It is available as a nonchargeable option with FGB and FGD.

14. **Nonhunting Number for Use With Hunt Group Arrangement or Uniform Call Distribution Arrangement for Use With WATS Access Line Service** provides an arrangement for an individual WATS Access Line Service within a multi-line hunt or uniform call distribution group that provides access to those WATS Access Line Services within the hunt or uniform call distribution group when it is idle or provides busy tone when it is busy, when the nonhunting number is dialed. Where available, this feature is only provided in Telephone Company electronic end offices in which WATS Access Line Service is provided. It is available as a nonchargeable option with FGB and FGD.

6.2.3 Local Switching Optional Features

A. Common Switching

15. **Automatic Number Identification** provides the automatic transmission of a seven or ten digit number and information digits to the customer's premises for calls originating in the LATA, to identify the calling station. The ANI feature is an end office software function which is associated on a call-by-call basis with (1) *all individual transmission paths in a trunk group routed directly between an end office and a customer's premises*, or (2) *where technically feasible, with all individual transmission paths in a trunk group between an end office and an access tandem, and a trunk group between an access tandem and a customer's premises.* Where ANI cannot be provided, (*e.g., on calls from four and eight party services*), information digits will be provided to the customer.

The seven digit ANI telephone number is available with Feature Group B. With this Feature Group, technical limitations may exist in Telephone Company switching facilities which require ANI to be provided only on a directly trunked basis. ANI will be transmitted on all calls except those originating from multi-party lines, coin stations and coinless pay telephones using Feature Group B or when an ANI failure has occurred.

The ten digit ANI telephone number is only available with FGD. The ten digit ANI telephone number consists of the Numbering Plan Area (*NPA*) plus the seven digit ANI telephone number. The ten digit ANI telephone number will be transmitted on all calls except those identified as multi-party line or ANI failure, in which case only the NPA will be transmitted (in addition to the information digit described below).

The information digits identify: (1) *telephone number is the station billing number-no special treatment required,* (2) *multi-party line-telephone number is a four or eight party line and cannot be identified-number must be obtained via an operator or in some other manner,* (3) *ANI failure has occurred in the end office switch which prevents identification of calling telephone number-must be obtained by operator or in some other manner,* (4) *hotel/motel originated call which requires room number identification,* (5) *coinless station, hospital, inmate, etc. call which requires special screening or handling by the customer,* and (6) *call is an Automatic Identified Outward Dialed (AIOD) call from customer premises equipment.* The ANI telephone number is the listed telephone number of the customer and is not the telephone number of the calling party. These ANI information digits are available with FGB and FGD.

Additional ANI information digits are available with FGD only. They include (1) *InterLATA restricted-telephone number is identified line,* (2) *InterLATA restricted-hotel/motel line,* (3) *InterLATA restricted-coinless, hospital, inmate, etc., line.* These information digits will be transmitted as agreed to by the customer and the Telephone Company.

ANI is provided as a nonchargeable option with FGB and FGD.

6.2.3 Local Switching Optional Features	
A.	Common Switching
16.	**Routing of IntraLATA Calls to the Telephone Company for Use With WATS Access Line Service** which is available with either, originating only WATS Access Line (WAL) Service not equipped with the *End Office End User Line Service Screening* optional feature, or with two-way WAL Service, provides that intraLATA calls originating over such services by the end users dialing valid NXX codes in the LATA, time or weather announcement services of the Telephone Company, community information services of an information service provider, local operator assistance (0– and 0+), service codes (611, 911), and Directory Assistance (411, 555-1212 and NPA+555-1212) will be routed to the facilities of the Telephone Company for completion. Calls placed by the end user's dialing the 950-0XXX or 950-1XXX will be directed to the FGB customer. Additionally, this option provides that interLATA calls originating from such services by the end user's dialing 0– will be directed to the FGD Switched Access Service of the customer providing the interLATA operator services. This option is available as a nonchargeable option with FGD.

6.2.3 Local Switching Optional Features	
B.	Transport Termination
1.	**Operator Trunk-Full Feature** provides the operator functions available in the end office to the customer's operator for interLATA use. These functions are: Operator Released, Operator Attached, Coin Collect, Coin Return and Ringback. It is available with FGD and is provided as a trunk type of Transport Termination.
2.	**Operator Trunk-Assist Feature** provides the operator functions available in the end office to the customer's operator. These functions are: Operator Released and Operator Attached. It is available with FGD and is provided as a trunk type of Transport Termination.
3.	**Rotary Dial Station Signaling** provides for the transmission of called party addresses signaling from rotary dial stations to the customer's premises for originating calls. This option is provided in the form of a specific type of Transport Termination. It is available as a nonchargeable option with FGB, only on a directly trunked basis.
C.	**WATS Access Line Service Terminations** are available only in end offices designated as WSOs.
1.	**E&M Supervisory Signaling** provides for E&M Type 1, Type 2 or Type 3 Supervisory Signaling. When E&M Supervisory Signaling is provided, Answer Supervision is also provided for originating traffic. This option is available with four-wire originating, terminating and two-way only WATS Access Line Service, for use with FGB and FGD.
2.	**Answer Supervision** provides for equipment at the end user premises that indicates that the called end user has answered, when such indication is provided by the interexchange carrier. When Answer Supervision is provided with two-wire WATS Access Line Service, Reverse Battery type Supervisory Signaling is also provided. This option is available with originating only two-wire WATS Access Line Service for use with FGB and FGD.

6.3 Description of Switched Access Services

6.3.1 General	
A.	Description of the Switched Access Feature Groups provided under this tariff are the same as those described in *NYNEX Tariff F.C.C. No. 1*, Section 6.3. In addition, a WATS Access Line service when ordered from *NYNEX Tariff F.C.C. No. 1*, Section 7 may at the option of the customer be provided for use with Feature Groups B and D.

6.4 Responsibility of the Telephone Company

In addition to the obligations in Section 2, the Telephone Company has certain other obligations pertaining only to the provision of Switched Access Service. Those regulations are the same as those set forth in *NYNEX Tariff F.C.C. No. 1*, Section 6.5.

6.4.1 Transmission Specifications	
A.	The available transmission specifications for Switched Access Service Arrangements offered under this tariff are the same as those stated in *NYNEX Tariff F.C.C. No. 1*, Section 6.4.

6.4.2 Excessive Trunk Group Blocking	
A.	Regulations for Network Blocking for Feature Group D are the same as those set forth in *NYNEX Tariff F.C.C. No. 1*, Section 6.7.7.

6.4.3 Measuring Access Minutes	
A.	Regulations for measuring access minutes for originating, terminating or two-way Feature Groups A, B and D are the same as those set forth in *NYNEX Tariff F.C.C. No. 1*, Section 6.7.6.

6.4.4 Determining Local Transport Facility Mileage	
A.	Regulations pertaining to Mileage Measurement and exceptions to the mileage measurement rules are the same as those set forth in *NYNEX Tariff F.C.C., No. 1*, Section 6.7.11.

.5 Responsibility of The Customer

In addition to the customer obligations set forth in Section 2, the customer has certain specific obligations pertaining to the use of the Switched Access Service Arrangements offered under this tariff as follows.

6.5.1 Report Requirements	
A.	Customers are responsible for providing the following reports or notification to the Telephone Company, when applicable.
1.	Jurisdictional Reports - Refer to Section 2.5.10.
2.	Usage Data-Meet Point Billing - Refer to Section 3.1.1A.
3.	800 NXX Code Reports - When a customer orders 800 Access Service it will report the appropriate NXX code which will be instituted in each access tandem or end office switch at which the customer identification function is performed. The customer will update the report each time a change occurs, (i.e., when a new code is added or an existing code is deleted).
4.	Code Screening Reports - When a customer orders Service Class Routing it will report the number of trunks and/or the appropriate codes to be instituted in each end office or access tandem switch, for each of the arrangements ordered.
	Trunk Group Measurement Reports - With the agreement of the customer, trunk group data in the form of usage in CCS, peg count and overflow for its end of all access trunk groups, where technologically feasible, will be made available to the Telephone Company. These data will be used to monitor trunk group utilization and service performance and will be based on previously arranged intervals and format.

6.5.2 Supervisory Signaling	
A.	The customer's facilities will provide the necessary on-hook, off-hook, answer and disconnect supervision.

6.5.3 Design of Switched Access Services	
A.	When a customer orders Switched Access Service on a per trunk basis, the customer will take reasonable steps to assure that sufficient Access Services have been ordered to handle its traffic.

6.6 Rate Regulations

Rates and charges for Switched Access Service provided under this tariff apply to originating, terminating and two-way FGB and FGD and 800 Access Service.

6.6.1 Types of Rates and Charges	
There are three types of rates and charges that apply to Switched Access Service: Monthly rates, Usage rates and Nonrecurring charges.	
A.	**Monthly Rates** are flat recurring rates that apply each month or fraction thereof that a chargeable optional feature is provided. For billing purposes, each month is considered to have thirty days.
B.	**Usage Rates** apply only when a specific rate element is used. They are applied on a per access minute basis or a per call basis. Usage rates are accumulated over a monthly period. Usage rates applied on a per access minute basis are applied differently to the various rate elements as set forth in Section 6.6.2.
C.	**Nonrecurring Charges** are one-time charges that apply for a specific work activity (i.e., installation or change to an existing service). The types of nonrecurring charges that apply for Switched Access Service are *Installation of Service, Installation of Optional Features or basic service elements* and *Service Rearrangements*.
1.	**Installation of Service** - Local Transport and Local Switching Nonrecurring charges apply to each Switched Access Service installed. For Switched Access Service ordered on a per line or trunk basis, the charge is applied per line or trunk. For Switched Access Service ordered on a BHMC basis, the charges are also applied on a per trunk basis but the charges apply only when the capacity ordered requires the installation of an additional trunk(s).
2.	**Installation of Optional Features** - If a separate nonrecurring charge applies for the installation of an optional feature, the charge applies whether the feature is installed coincident with the initial installation of service or at any time subsequent to the initial installation of service. For optional features without separate nonrecurring charges, the Local Switching nonrecurring charge will apply when the optional features are ordered subsequent to the installation.

6.6.1 Types of Rates and Charges	
3.	Service Rearrangements are changes to existing services (installed) which do not result in either a change in the minimum period requirements as set forth in Section 2.2.5 or a change in the physical location of the point of termination at the customer's premises or the customer's end user's premises. Service rearrangements which are considered to result in a change in the minimum service period are as set forth in *NYNEX Tariff F.C.C. No. 1*, Section 5. Changes which result in the establishment of new minimum period obligations are treated as *Discontinuances of Existing Service*, and *Installations of New Service* (refer to Section 6.6.1C6). Changes in the physical location of the point of termination are treated as *Moves* (refer to Section 6.6.1C5). The charge to the customer for the service rearrangement is dependent on whether the change is administrative only or involved an actual physical change to the service. The following Administrative changes will be made without charge to the customer.
•	Change of Customer Name
•	Change of customer or customer's end user premises address when the change of address is not a result of a physical relocation of equipment.
•	Change in billing data [name, address or contact name or telephone number]
	Change of agency authorization
•	Change of customer circuit identification.
•	Change of billing account number.
•	Change of customer test line number.
•	Change of customer or customer's end user contact name or telephone number
•	Change of jurisdiction.
•	If, due to network considerations of the Telephone Company, it was impossible to combine 800 Access Services traffic with a customer's other trunk side Switched Access Services, no charge shall be applied to combine the trunk groups when it becomes possible.

6.6.1 Types of Rates and Charges	
4.	All Other Service Rearrangements will be charged for as follows:
•	If the change involves the addition of an optional feature which has a separate nonrecurring charge, that nonrecurring charge will apply.
•	If the change involves rearrangement of a customer's FGD Access Service from direct routed to tandem routed, no charge shall apply for the customer requested rearrangement as long as the following conditions are met: [a] *Tandem routed access was not available to the end office at the time the end office was converted to an equal access office;* [b] *The customer was providing service in the relevant area prior to the availability of tandem routed access;* [c] *The customer requested the rearrangement of its trunks from direct routed access to tandem routed access within six months of the first availability of tandem routed access in that area;* and [d] *The customer orders, as tandem routed, the equivalent capacity to replace the direct routed trunks.*
•	Subsequent to the initial installation of 800 Access Services, any addition or deletion of an 800 Access Service NXX code will be subject to a nonrecurring charge which applies for the first NXX code added or deleted, and a separate nonrecurring charge applies for each additional NXX code added or deleted at the same time in the same LATA on the same order. The charges are the same as those set forth in *NYNEX Tariff F.C.C. No. 1*, Section 30.
•	If the change involves the rearrangement of existing Switched Access Services from a digital Interface Group to another capable of a higher bit rate), a *Digital-To-Digital Rearrangement* charge will apply per Interface Group with the lower bit rate capability. The charge is the same as that set forth in *NYNEX Tariff F.C.C. No. 1*, Section 30. No charge applies to the individual Switched Services provided within the Interface Group unless the customer changes the service type or changes only a portion of the individual services from one interface group to the other, in which case, the appropriate nonrecurring charge for each change will apply.
•	For all other changes, including the addition of, or modifications to, optional features without separate nonrecurring charges the Local Switching nonrecurring charge will apply. When an optional feature is not required on each transmission path, but rather on an entire transmission path group, an end office or an access tandem switch, only one such charge will apply (i.e., it will not apply per transmission path).
•	If the change involves a modification to a FGB or D to include the initial provision of 800 Access Service in addition to non-800 Access Service traffic, the Local Switching Installation nonrecurring charge will apply for service rearrangements on the existing trunks.

6.6.1 Types of Rates and Charges

5. **Moves** - A move involves a change in the physical location of one of the following: [a] *the point of termination at the customer's or the customer's end user's premises,* [b] *the customer's premises.* The charges for the move are dependent on whether the move is to a new location within the same building or to a different building.

- **Moves Within the Same Building** - When the move is to a new location within the same building, the charge for the move will be the Local Switching nonrecurring charge for the capacity affected. There will be no change in the minimum period requirements.
- **Moves to a Different Building** will be treated as a discontinuance and start of service and all associated nonrecurring charges will apply. New minimum period requirements will also be established for the new service. The customer will also remain responsible for satisfying all outstanding minimum period charges for the discontinued service.

6. When a customer upgrades a FGA or FGB Service to a FGD Service, the nonrecurring charges will not apply if the following conditions are met: [a] *The same customer premises is maintained* **and,** [b] *The orders for the disconnect of the FGA or FGB service and the start of the FGD service are placed with the Telephone Company at the same time* **and,** [c] *The customer requests the same effective date for both the disconnect of service and start of service orders.*

6.6.2 Application of Rates and Charges	
A.	Local Switching and Transport rates are applied to all minutes of use measured as specified in Section 6.4.4.
B.	As specified in the *Commission's Order No. 20,077*, Switched Access originating and/or terminating charges apply to all intrastate messages which make use of Switched Access subject to this tariff.

7 Reserved For Future Use

8 Reserved For Future Use

9 Reserved For Future Use

10 Reserved For Future Use

11 Special Facilities Routing of Access Services

11.1 General

The services provided under this tariff are provided over such routes and facilities as the Telephone Company may elect. Special Facilities Routing is involved when, in order to comply with requirements specified by the customer, the Telephone Company provides Switched Access Service in a manner which includes one or more of the following (which are defined in Section 11.1.1): *Diversity, Avoidance* and/or *Cable-Only Facilities.*

11.1.1 Description	
A.	**Diversity**-Two or more services must be provided over not more than two different physical routes.
B.	**Avoidance**-A service must be provided on a route which avoids specified geographic locations.
C.	**Cable-Only Facilities**-Certain services are provided on cable-only facilities to meet the particular needs of a customer. Service is provided subject to the availability of cable-only facilities. In the event of service failure, restoration will be made through the use of any available facilities as selected by the Telephone Company.

11.1.2 Manner of Provision	
A.	Avoidance, Diversity and Cable-Only Facilities are available on Switched Access Service (refer to Section 6).
B.	In order to avoid the compromise of special routing information, the Telephone Company will provide the required information for each specially routed service to only the ordering customer. If requested by the customer, this information will be provided when service is installed and prior to any subsequent changes in routing.
C.	The offering of Special Facilities Routing of Access Services contemplates the use of existing facilities.

11.2 Rate Regulations

The rates and charges for *Special Facilities Routing of Access Services* are set forth in Section 30.11 are in addition to all other rates and charges that may be applicable for services provided under other sections of this tariff.

The rates and charges for administration and any other specific items of cost directly attributable to the provision of this service shall be filed in this tariff.

12 Reserved For Future Use

13 Additional Engineering, Labor and Miscellaneous Services

Regulations and charges for Additional Engineering, Additional Labor and Miscellaneous Services applicable to Switched Access Services provided under the regulations and rates of this tariff are the same as those set forth in *NYNEX F.C.C. No. 1*, Section 13, for originating, terminating or two-way Feature Groups A, B and D, with the exception of *those portions of Section 13 relating to the Customer Notification, Equal Access Balloting Process, the Allocation Process and Interexchange Carrier Customer Lists provisions for Presubscription.*

14 Reserved For Future Use

15 Operating Territory

15.1 Locations

The operating territory of the Telephone Company for the *State of New Hampshire* is comprised of the locations defined by the name of rate centers which are contained in Section 15.1.1.

15.1.1 Rate Centers	
A.	Alstead, Ashland
B.	Barrington, Bartlett, Bedford, Belmont, Berlin, Bethlehem, Bristol
C.	Campton, Canaan, Candia, Canterbury, Center Harbor, Center Ossipee, Center Sandwich, Charlestown, Claremont, Colebrook, Concord, Conway
D.	Danbury, Deerfield, Derry, Dover, Dublin, Durham
E.	Enfield, Epping, Epsom, Errol, Exeter
F.	Farmington, Fitzwilliam, Franconia, Franklin
G.	Goffstown, Gorham, Greenfield, Greenville, Groveton
H.	Hampstead, Hampton, Hancock, Hanover, Harrisville, Hinsdale
I.	
J.	Jackson, Jaffrey, Jefferson
K.	Keene, Kingston
.	Laconia, Lancaster, Lebanon, Lisbon, Littleton, Lyme
M.	Madison, Manchester, Marlborough, Marlow, Meredith, Merrimack, Milan, Milford, Milton, Milton Mills, Monroe
N.	Nashua, New Boston, New Market, Newport, N. Conway, N. Stratford, N. Walpole, Northwood, N. Woodstock
O.	Oxford
P.	Pelham, Penacook, Peterborough, Piermont, Pike, Pittsburg, Pittsfield, Plainfield, Plaistow, Plymouth, Portsmouth
Q.	
R.	Raymond, Rindge, Rochester, Rumney, Rye Beach
S.	Salem, Sanbornville, Seabrook, Somersworth, S. Hampton, Spofford, Sullivan, Sunapee, Suncook

15.1.1 Rate Centers	
T.	Tamworth, Tilton, Troy, Twin Mountain
U.	
V.	
W.	Walpole, Warren, W. Chesterfield, W. Lebanon, Westmoreland, W. Stewartstown, Whitefield, Winchester, Wolfeboro, Woodsville

16 Reserved For Future Use

17 Reserved For Future Use

18 Reserved For Future Use

19 Reserved For Future Use

20 Reserved For Future Use

21 Reserved For Future Use

22 Reserved For Future Use

23 Reserved For Future Use

24 Reserved For Future Use

25 Reserved For Future Use

26 Reserved For Future Use

27 Reserved For Future Use

28 Reserved For Future Use

29 Reserved For Future Use

30 Rates and Charges

30.1 Reserved For Future Use

30.2 Reserved For Future Use

30.3 Ordering of Service

Refer to NYNEX Tariff F.C.C. No. 1, Section 30.5.

30.4 Reserved For Future Use

30.5 Carrier Common Line Access Service

30.5.1 Carrier Common Line				
ID	Svc. Category	Rate Element	Rate	USOC
XXXXX	Switched Access Svc.	Terminating, per access minute	0.036280	N/A
XXXXX		Originating, per access minute	0.116280	
XXXXX	800 Access Svc.	Terminating, per access minute	0.095703	
XXXXX		Originating, per access minute	0.035703	

30.6 Switched Access

30.6.1 Local Transport

ID	Svc. Category	Rate Element	Rate	USOC
XXXXX	Switched Access Svc.	Termination, Originating, per access min.	0.001452	N/A
XXXXX		Termination, Terminating, per access min.	0.001452	
XXXXX		Facility, Originating, per mile, per access min.	0.000015	N/A
XXXXX		Facility,Terminating, per mile, per access min.	0.000015	
XXXXX	800 Access Svc.	Termination, Originating, per access min.	0.001787	
XXXXX		Termination, Terminating, per access min.	0.001787	
XXXXX		Facility, Originating, per mile, per access min.	0.000016	
XXXXX		Facility, Terminating, per mile, per access min.	0.000016	
XXXXX	Installation	Per Line or Trunk, NRC	95.00	
	Service Rearrangement	0– Passthrough, Change in Operator Svc. Traffic Arrg't: NRC		
XXXXX		– Per 1st TOPS Office Rearranged	169.82	
XXXXX		– Per Addt'l TOPS Office Rearranged	108.98	

30.6.2 Local Switching

ID	Svc. Category	Rate Element	Rate	USOC
XXXXX	Switched Access Svc.	Originating. per access minute	0.001901	N/A
XXXXX		Terminating, per access minute	0.001901	
XXXXX	800 Access Svc.	Originating, per access minute	0.002119	
XXXXX		Terminating, per access minute	0.002119	
XXXXX	Installation	Per Line or Trunk, NRC	60.00	

30.7 Reserved For Future Use

30.8 Reserved For Future Use

30.9 Reserved For Future Use

30.10 Reserved For Future Use

30.11 Special Facilities Routing of Access Services

30.11.1 Individual Case Basis

ID	Svc. Category	Rate Element	Rate	USOC
	Diversity			SYD++
	Avoidance			SYA++
	Diversity & Avoidance Combined			SYB++
	Cable Only			SYC++

30.12 Reserved For Future Use

30.13 Additional Engineering, Labor and Miscellaneous Services.

Refer to NYNEX F.C.C. No. 1, Section 30.13.

ATTACHMENT
ITEM One Comm 1-1(e)
VZ #_____

VERIZON NEW ENGLAND INC.

Rates and Charges Effective In

THE STATE OF NEW HAMSPHIRE

NHPUC No. 85

Issued: March 07, 2001
Effective: March 07, 2001

J. Michael Hickey
President-NH

1. Tariff Information 1
1.1. General 1
1.1.1. Concurring, Connecting and Other Participating Carriers 1
1.1.2. Page Revisions 1
1.1.2.C. Supplement Numbers 1
1.1.3. Tariff Codes 1
1.2. Referencing 2
1.2.1. Reference to Other Tariffs 2
1.2.2. Reference to Other Publications 2
1.3. Tariff Terminology 3
1.3.1. Abbreviations 3
1.3.2. Definitions 5

2.	General Regulations	1
2.1.	Application of Tariff	1
2.1.1.	Scope	1
2.2.	Use of Service	2
2.2.1.	General	2
2.2.2.	Lawful Use	2
2.2.3.	Access Service Connections	2
2.2.4.	Title or Ownership Rights	2
2.2.5.	Minimum Periods of Service	2
2.3.	Responsibility of the Telephone Company	3
2.3.1.	Limitations	3
2.3.2.	Liability	3
2.3.3.	Provision of Service	4
2.3.4.	Installation and Point of Termination of Service	5
2.4.	Customer Notification and Coordination	6
2.4.1.	Changes and Substitutions	6
2.4.2.	Refusal and Discontinuance of Service	6
2.4.3.	Service Affecting Activities	7
2.4.4.	Provision and Ownership of Telephone Numbers	7
2.4.5.	Interference or Impairments	8
2.4.6.	Customer Coordination with Respect to Network Contingencies	8
2.5.	Responsibility of The Customer	9
2.5.1.	Scope	9
2.5.2.	Liability	9
2.5.3.	Ownership of Facilities and Theft	10
2.5.4.	Equipment Space and Power	11
2.5.5.	Availability for Testing	11
2.5.6.	Coordination with Respect to Network Contingencies	11
2.5.7.	Balance, Current and Noise	11
2.5.8.	Design of Customer Services	11
2.5.9.	References to the Telephone Company	12
2.5.10.	Jurisdictional Report Requirements	12
2.5.11.	Determination of Intrastate Charges for Mixed Interstate and Intrastate Access Service	15

3.	Ordering of Service	1
3.1.	Ordering, Rating and Billing of Access Services Where More Than One Exchange Telephone Company is Involved	1
3.1.1.	General	1
3.1.2.	Meet Point Billing	1
3.1.2.A.	General	1
3.1.2.B.	FGC Availability	1
3.1.2-1	Exhibit-Meet Point Billing	5

4.	Issuance, Payment and Crediting of Customer Bills	1
4.1.	Undertaking of the Telephone Company	1
4.1.1.	Billing Convention Methods	1
4.1.2.	Late Payment Penalty	1
4.1.3.	Billing Periods	1
4.1.4.	Payment Date	1
4.1.5.	Medium of Payment	2
4.1.5.A.1.	Immediately Available Funds	2
4.1.6.	Customer Deposits	2
4.1.7.	Nonrecurring Charges	3
4.1.8.	Billing Dispute	4
4.1.9.	Billing Adjustments and Verification	5
4.1.10.	Computation of Billed Charges	6
4.1.11.	Additional Copies of Bills	6
4.1.12.	Meet Point Billing	6
4.2.	Credit Allowance Conditions	7
4.2.1.	Service Interruptions	7

5.	Carrier Common Line Access Service	1
5.1.	General	1
5.1.1.	Description	1
5.1.2.	Limitations	1
5.2.	Undertaking of the Telephone Company	2
5.2.1.	Scope	2
5.3.	Obligations of the Customer	3
5.3.1.	Reselling MTS/MTS Type Service	3
5.3.2.	Customer Facilities	3
5.4.	Rate Regulations	4
5.4.1.	Application of Rates and Charges	4
5.4.1.A.	General	4
5.4.2.	Determination of Charges	4
5.4.3.	One Time Credit	5

6.	Switched Access Service	1
6.1.	General	1
6.1.1.	Reference to Tariff Provisions	1
6.1.2.	Service Structure	1
6.1.2-1	Exhibit-Local Transport, Local Switching and Carrier Common Line when Combined to Provide a Complete Switched Access Service	2
6.1.3.	Manner of Provision	3
6.2.	Rate Categories	4
6.2.1.	Local Transport	4
6.2.1.E.1.	Entrance Facility	5
6.2.1.E.2.	Interconnection Charge	5
6.2.1.F.	Direct Trunked Transport	5
6.2.1.G.1.	Local Transport Termination	6
6.2.1.G.2.	Local Transport Facility	6
6.2.1.G.3.	Local Transport Tandem Switching	6
6.2.1.J.	Interface Groups	6
6.2.1.K.	Non-Chargeable Optional Features	6
6.2.1.K.1.	Interface Groups 1 and 2	6
6.2.1.K.2.	Interface Group 2	6
6.2.1.K.3.	Interface Groups 6, 7 and 9	7
6.2.1.K.4.	Customer Specified Entry Switch Receive Level	7
6.2.1.K.5.	Customer Specification of Local Transport Termination	7
6.2.1.K.6.	SS7 Signaling	7
6.2.1.L.	Chargeable Optional Features	7
6.2.1.L.1.	CCSA	7
6.2.1-1	Exhibit-Premises Interface Codes–Interface Group 1 (USOC TTP1X)	9
6.2.1-2	Exhibit-Premises Interface Codes–Interface Group 2 (USOC TTP2X)	10
6.2.1-3	Exhibit-Premises Interface Codes–Interface Group 6 (USOC TTP6X)	11
6.2.1-4	Exhibit-Premises Interface Codes–Interface Group 9 (USOC TTP9X)	12
6.2.2.	Local Switching	13
6.2.2.A.1.	Local Access	13
6.2.2.A.1.a.	Common Switching	13
6.2.2.A.1.b.	Transport Termination	13
6.2.2.A.2.	Line Termination	13
6.2.2.A.3.	Intercept	13
6.2.3.	Local Switching Optional Features	13
6.2.3.B.	Alternate Traffic Routing–End Office Alternate Routing When Ordered in Trunks	13
6.2.3.C.	Alternate Traffic Routing–Multiple Customer Premises	14
6.2.3.D.	ANI	14
6.2.3.E.	Band Advance Arrangement for Use With WAL Service	15
6.2.3.F.	Call Denial on Line or Hunt Group	15
6.2.3.G.	Calling Party Number	15
6.2.3.H.	Carrier Identification Parameter	16
6.2.3.I.	Carrier Selection Parameter	16
6.2.3.J.	Charge Number	16

6. Switched Access Service
6.2.3.K. End Office End User Line Service Screening for Use With WAL Service ... 17
6.2.3.L. Hunt Group Arrangement ... 17
6.2.3.M. Hunt Group Arrangement for Use With WAL Service ... 17
6.2.3.N. Nonhunting Number for Use With Hunt Group Arrangement or Uniform Call Distribution Arrangement for Use With WAL Service ... 17
6.2.3.O. Nonhunting Number for Use With Hunt Group or Uniform Call Distribution Arrangement ... 17
6.2.3.P. Operator Trunk Assist Feature ... 18
6.2.3.Q. Operator Trunk Full Feature ... 18
6.2.3.R. Rotary Dial Station Signaling ... 18
6.2.3.S. Routing of IntraLATA Calls to the Telephone Company for Use With WAL Service ... 18
6.2.3.T. Service Class Routing ... 18
6.2.3.U. Service Code Denial on Line or Hunt Group ... 18
6.2.3.V. Uniform Call Distribution Arrangement ... 19
6.2.3.W. Uniform Call Distribution Arrangement for Use With WAL Service ... 19
6.2.3.X. Up to Seven Digit Outpulsing of Access Digits To Customer ... 19
6.2.3.Y. WAL Service Terminations ... 19
6.2.3.Y.1. E&M Supervisory Signaling ... 19
6.2.3.Y.2. Answer Supervision ... 19
6.3. Description of Switched Access Services ... 20
6.3.1. General ... 20
6.3.2. Feature Group 2A (FG2A) ... 20
6.3.2.C. Billing Options ... 20
6.3.2.D. Terminating Access ... 21
6.3.2.E. Originating Access ... 21
6.3.2.F. Signaling ... 21
6.3.2.G. Intercept Announcement ... 21
6.3.3. 800 Data Base Access Service ... 21
6.3.3.A. General ... 21
6.3.3.G. Optional Features ... 23
6.3.3.G.1. Call Handling and Destination Feature ... 23
6.3.3.G.1.f. 800 to POTS Translation ... 23
6.4. Responsibility of the Telephone Company ... 24
6.4.1. General ... 24
6.4.2. Transmission Specifications ... 24
6.4.3. Excessive Trunk Group Blocking ... 24
6.4.4. Measuring Access Minutes ... 24
6.4.4.B. Feature Group 2A Usage Measurement ... 24
6.4.5. Determining Local Transport Facility Mileage ... 25
6.4.6. Determination of Number of Transmission Paths ... 25
6.5. Responsibility of The Customer ... 26
6.5.1. General ... 26
6.5.2. Facility Requirements ... 26
6.5.3. Report Requirements ... 26
6.5.3.A.1. Jurisdictional Reports ... 26
6.5.3.A.2. Usage Data–Meet Point Billing ... 26
6.5.3.A.3. Code Screening Reports ... 26

6. Switched Access Service
6.5.3.A.4. Trunk Group Measurement Reports 26
6.5.4. Supervisory Signaling 26
6.5.5. Design of Switched Access Services 26
6.6. Rate Regulations 27
6.6.1. General 27
6.6.2. Monthly Rates 27
6.6.3. Usage Rates 27
6.6.4. Nonrecurring Charges 27
6.6.4.B. Installation of Service 27
6.6.4.B.1. Switched Access Service Ordered on a Per Line or Trunk Basis 27
6.6.4.B.2. Switched Access Service Ordered on a BHMC Basis 27
6.6.4.B.3. CCSA STP Links 27
6.6.4.C. Installation of Optional Features or BSEs 28
6.6.4.D. Service Rearrangements 28
6.6.4.E. Trunk Rearrangements and Rearrangements of Switched Access Services onto an Existing Switched Access DS3 or DS1 Facility 29
6.6.4.E.1. Trunk Rearrangements 29
6.6.4.F. All Other Service Rearrangements 29
6.6.4.G. Moves 31
6.6.4.G.2.a. Moves Within the Same Building 31
6.6.4.G.2.b. Moves to a Different Building 31
6.6.4.H. Upgrades 31
6.7. Application of Rates and Charges 32
6.7.1. General 32
6.7.2. CCSA Rates 32
6.7.3. 800 Database Access Service Carrier Identification Charge 32
6.7.4. Local Transport Rates 32

7. Reserved for Future Use 1

8. Reserved for Future Use 1

9. Reserved for Future Use 1

10. Reserved for Future Use 1

11. Special Facilities Routing of Access Services 1
11.1. General 1
11.1.1. Description 1
11.1.1.A.1. Diversity 1
11.1.1.A.2. Avoidance 1
11.1.1.A.3. Cable Only Facilities 1
11.1.2. Manner of Provision 1
11.1.3. Application of Rates and Charges 1

12. Reserved for Future Use 1

13. Additional Engineering, Labor and Miscellaneous Services 1
13.1. Regulations 1
13.1.1. General 1

14. **IntraLATA Presubscription (ILP) Services** 1
14.1. IntraLATA Presubscription 1
14.1.1. Description 1
14.2. Primary Interexchange Carrier (PIC) Verification 2
14.2.1. Description 2
14.3. Application of Rates and Charges 3
14.3.1. IntraLATA Presubscription 3
14.3.1.B. Service Charges 3
14.3.1.C. Unauthorized ILP PIC Change/Restoral 3
14.3.2. PIC Verification Service 4
14.3.3. Intrastate Equal Access Cost Recovery 4
14.3.4. ILP PIC Change Charge Billing Options 4
14.3.4.A. Direct Billing Option 4
14.3.4.B. Reverse Billing Option 4

15. Operating Territory 1
15.1. Locations 1
15.1.1. Rate Centers 1

16. Reserved for Future Use 1

17. Reserved for Future Use 1

18. Reserved for Future Use 1

19. Reserved for Future Use 1

20. Reserved for Future Use 1

21. Reserved for Future Use 1

22. Reserved for Future Use 1

23. Reserved for Future Use 1

24. Reserved for Future Use 1

25. Reserved for Future Use 1

26. Reserved for Future Use 1

27. Reserved for Future Use 1

28. Reserved for Future Use 1

29. Reserved for Future Use..... 1

30.	Rates and Charges	1
30.1.	Tariff Information	1
30.2.	General Regulations	2
30.3.	Ordering of Service	3
30.4.	Issuance, Payment and Crediting of Customer Bills	4
30.5.	Carrier Common Line Access Service	5
30.5.1.	Carrier Common Line	5
30.6.	Switched Access	6
30.6.1.	Entrance Facility	6
30.6.2.	Direct Trunked Transport	7
30.6.3.	Tandem Switched Transport–Local Transport Termination	7
30.6.4.	Tandem Switched Transport–Local Transport Facility	7
30.6.5.	Tandem Switched Transport–Tandem Switching	8
30.6.6.	Interconnection Charge	8
30.6.7.	Local Transport–Other	8
30.6.8.	Local Switching	9
30.6.9.	Feature Group 2A	9
30.6.10.	800 Database Access Service	10
30.6.11.	Shared Billing Arrangement	10
30.7.	Reserved for Future Use	11
30.8.	Reserved for Future Use	12
30.9.	Reserved for Future Use	13
30.10.	Reserved for Future Use	14
30.11.	Special Facilities Routing of Access Services	15
30.12.	Reserved for Future Use	16
30.13.	Additional Engineering, Labor and Miscellaneous Services	17
30.13.1.	1+ Coin Service	17
30.14.	IntraLATA Presubscription (ILP) Services	18
30.14.1.	IntraLATA Presubscription (ILP)	18
30.14.2.	PIC Verification Service	18
30.14.3.	Intrastate Equal Access Cost Recovery	18
30.15.	Operating Territory	19
30.16.	Reserved for Future Use	20
30.17.	Operator Assisted Call Service	21
30.17.1.	1+ Coin Service	21
30.18.	Reserved for Future Use	22
30.19.	Reserved for Future Use	23
30.20.	Reserved for Future Use	24
30.21.	Reserved for Future Use	25
30.22.	Reserved for Future Use	26
30.23.	Reserved for Future Use	27
30.24.	Reserved for Future Use	28
30.25.	Reserved for Future Use	29
30.26.	Reserved for Future Use	30
30.27.	Reserved for Future Use	31
30.28.	Reserved for Future Use	32
30.29.	Reserved for Future Use	33

31. Rates and Charges–Individual Case Basis (ICB) Customer Specific Charges..... 1

1. Tariff Information
1.1 General

1.1.1	Concurring, Connecting and Other Participating Carriers
A.	There are no concurring, connecting or other participating carriers.

1.1.2	Page Revisions
A.	As a result of regulatory initiatives tariff pages are revised and filed with the PUC on a continual basis. When tariff pages are filed, they show an issued and effective date (see page bottom). The issued date is the day upon which the pages were filed. The effective date is thirty days following the issued date, or the date upon which the pages have been ordered to become effective.
B.	Each tariff page displays unique page identification information (see page top right). The first issuance of a page is labeled as the original. Future revisions are issued sequentially as follows, first revision, second revision, third revision, (etc.). Revised pages cancel effective pages. The effective page is the foundation upon which all revisions are made.
C.	**Supplement Numbers—** Tariff pages are occasionally issued as supplements. This occurs when the page being filed is already pending PUC decision in another regulatory initiative. When the pending page becomes effective and the supplement page becomes effective as well, it becomes necessary to incorporate the revisions contained on the supplement page into a standard number tariff page. The incorporation will generally occur in the next regulatory initiative in which that page is involved.

1.1.3	Tariff Codes
A.	Appearing in the right margins of tariff pages are alphabetical characters enclosed in parenthesis. These characters represent a coding mechanism to explain the modification that has been made from one page revision to the next. They are as follows.
1.	(C)—A change in regulation
2.	(D)—A deletion due to discontinuance of a rate or regulation
3.	(I)—A rate that has been increased
4.	(N)—A new regulation or rate
5.	(R)—A rate that has been decreased
6.	(S)—The incorporation of approved material issued under a supplement
7.	(T)—Text that has changed without causing a change in rate or regulation
8.	(X)—Text that has been moved from one page to another

1. Tariff Information
1.2 Referencing

1.2.1	Reference to Other Tariffs
A.	Whenever reference is made in this tariff to other tariffs of the Telephone Company, the reference is to the tariffs in force as of the effective date of this tariff, and to amendments thereto and successive issues thereof. The regulations, rates and charges contained herein are in addition to the applicable regulations, rates and charges specified in other tariffs of the Telephone Company which are referenced herein.

1.2.2	Reference to Other Publications
A.	Reference to publications (technical or otherwise), may be made in this tariff. Such publications may be obtained from the sources specified in Bell Atlantic Telephone Companies Tariff FCC No. 11.

1. Tariff Information
1.3 Tariff Terminology

1.3.1 Abbreviations	
ac	Alternating Current
ANI	Automatic Number Identification
ANSI	American National Standards Institute
BHMC	Busy Hour Minutes of Capacity
BP	Billing Percentage
CCS7	Common Channel Signaling 7
CCSA	Common Channel Signaling Access
CIP	Carrier Identification Parameter
CN	Charge Number
CO	Central Office
CPN	Calling Party Number
CSP	Carrier Selection Parameter
dB	Decibel
dc	Direct Current
ELEPL	Equal Level Echo Path Loss
EPL	Echo Path Loss
f	Frequency
FID	Field Identifier
FCC	Federal Communications Commission
Hz	Hertz
IC	Interexchange Carrier
ICB	Individual Case Basis

1. Tariff Information
1.3 Tariff Terminology

1.3.1 Abbreviations	
IP	Interconnection Point
LATA	Local Access and Transport Area
MTS	Message Telecommunications Service(s)
NPA	Numbering Plan Area
NRC	Nonrecurring Charge
NXX	Three Digit Central Office Code
POT	Point of Termination
POTS	Plain Old Telephone Service
RSM	Remote Switching Module
RSS	Remote Switching System
SMS	Service Management System
SP	Signaling Point
SPOI	Signaling Point of Interconnection
SS7	Signaling System 7
SSP	Service Switching Point
STP	Signaling Transfer Point
TCIC	Trunk Circuit Identification Code
TSPS	Traffic Service Position System
USOC	Uniform Service Order Code
V&H	Vertical & Horizontal
WAL	WATS Access Line
WATS	Wide Area Telecommunications Service(s)

1. Tariff Information
1.3 Tariff Terminology

1.3.1 Abbreviations	
WSO	WATS Serving Office

1.3.2 Definitions
800 Database Access Query—A database lookup which returns a valid identification code.
800 Service Management System—The main operations support system used to create and update 800 service records in the national 800 database.
800 Service Provider—A telecommunications company, including exchange carriers and ICs or resellers of exchange or interexchange services, that offers 800 service to end users.
Access Code—A uniform five or seven digit code assigned by the Telephone Company to an individual customer. The five digit code has the form 10XXX and the seven digit code has the form 950–XXXX.
Access Minutes—That usage of exchange facilities in intrastate service for the purpose of calculating chargeable usage. On the originating end of an intrastate call, usage is measured from the time the originating end user's call is delivered by the Telephone Company to and acknowledged as received by the customer's facilities connected with the originating exchange. On the terminating end of an intrastate call, usage is measured from the time the call is received by the end user in the terminating exchange. Timing of usage at both originating and terminating ends of an intrastate call shall terminate when the calling or called party disconnects, whichever event is recognized first in the originating and terminating exchanges, as applicable.
Access Tandem—A Telephone Company switching system that provides a concentration and distribution function for originating or terminating traffic between end offices and a customer's premises.
Answer/Disconnect Supervision—The transmission of the switch trunk equipment supervisory signal (Off Hook or On Hook) to the customer's point of termination as an indication that the called party has answered or disconnected.
Attenuation Distortion—The difference in loss at specified frequencies relative to the loss at 1004 Hz, unless otherwise specified.
Bit—The smallest unit of information in the binary system of notation.
Business Day—The time of day that a company is open for business. Generally, in the business community, these are 8AM or 9AM to 5PM or 6PM, respectively, with an hour for lunch, Monday through Friday, resulting in a standard forty hour work week. However, business day hours for the Telephone Company may vary based on Telephone Company policy, union contract and location. To determine such hours for an individual company, or company location, that company should be contacted.

1. Tariff Information
1.3 Tariff Terminology

1.3.2 Definitions
Busy Hour Minutes of Capacity—The customer specified maximum amount of switched access service access minutes the customer expects to be handled in an end office switch during any hour in an 8AM to 11PM period for the feature group ordered. This customer furnished BHMC quantity is the input data the Telephone Company uses to determine the number of transmission paths for the feature group ordered.
Call—A customer attempt for which the complete address code (e.g., 0–, 911, or ten digits) is provided to the serving dial tone office.
Carrier or Common Carrier—See Interexchange Carrier.
CCS—A hundred call seconds, which is a standard unit of traffic load that is equal to one-hundred seconds of usage or capacity of a group of servers (e.g., Trunks).
Central Office—A local Telephone Company switching system where telephone exchange service customer station loops are terminated for purposes of interconnection to each other and to trunks.
Central Office Prefix—The first three digits (NXX) of the seven digit telephone number assigned to a customer's telephone exchange service when dialed on a local basis.
Channel(s)—An electrical (or photonic, in the case of fiberoptic based transmission systems), communications path between two or more points of termination.
Channelize—The process of multiplexing-demultiplexing wider bandwidth or higher speed channels into narrower bandwidth or lower speed channels.
Common Channel Signaling Access—The capability which allows customer access to the Telephone Company SS7 signaling network.
Common Line—A line, trunk or other facility provided under the general and/or local exchange service tariffs of the Telephone Company, terminated on a central office switch. A common line residence is a line or trunk provided under the residence regulations of the general and/or local exchange service tariffs. A common line business is a line provided under the business regulations of the general and/or local exchange service tariffs.
Common Transport—The use of circuits and equipment for transport by multiple customers.
Communications System—Channels and other facilities which are capable of communications between terminal equipment provided by other than the Telephone Company.
Conversation Minutes—The measurement of minutes beginning when either answer supervision or an off hook supervisory signal is received from the terminating end user's end office and ending when either disconnect supervision or an on hook supervisory signal is received from the terminating end user's end office, indicating the called party has disconnected.

1. Tariff Information
1.3 Tariff Terminology

1.3.2 Definitions
Customer(s)—Any individual, partnership, association, joint stock company, trust, corporation or governmental entity or other entity which subscribes to the services offered under this tariff, including ICs, resellers or other entities engaged in the provisioning of interexchange services which utilize the network of the Telephone Company and who have been certified to provide interexchange services by the PUC as described in Section 2.1.
Decibel—A unit used to express relative difference in power, usually between acoustic or electric signals, equal to ten times the common logarithm of the ratio of two signal powers.
Decibel Reference Noise C Message Weighting—Noise power measurements with C Message Weighting in dBs relative to a reference 1000 Hz tone of 90 dB below one milliwatt.
Decibel Reference Noise C Message Referenced to 0—Noise power in Decibel Reference Noise C Message Weighting referred to or measured at a zero transmission level point.
Dedicated Transport—The use of circuits and equipment for transport by a single customer.
Detail Billing—The listing of each message and/or rate element for which charges to a customer are due on a bill prepared by the Telephone Company.
Direct Trunked Transport—Transport of switched access service, over facilities dedicated to the use of a single customer, without switching at the tandem, either between the serving wire center and the end office, or between two customer designated Telephone Company offices.
Directory Assistance—The provision of telephone numbers by a Telephone Company operator when the operator location is accessed by a customer by dialing (NPA) 555–1212.
Echo Path Loss—The measure of reflected signal at a four wire point of termination without regard to the send and receive transmission level point.
Echo Return Loss—A frequency weighted measure of return loss over the middle of the voiceband (approximately 500 to 2500 Hz), where talker echo is most annoying.
Effective 2 Wire—A condition which permits the simultaneous transmission in both directions over a channel, but it is not possible to insure independent information transmission in both directions. Effective two wire channels may be terminated with two wire or four wire interfaces.
Effective 4 Wire—A condition which permits the simultaneous independent transmission of information in both directions over a channel. The method of implementing effective four wire transmission is at the discretion of the Telephone Company (physical, time domain, frequency domain separation or echo cancellation techniques). Effective four wire channels may be terminated with a two wire interface at the customer's premises. However, when terminated two wire, simultaneous independent transmission cannot be supported because the two wire interface combines the transmission paths into a single path.

1. Tariff Information
1.3 Tariff Terminology

1.3.2 Definitions
End Office Switch—A local Telephone Company switching system where telephone exchange service customer station loops are terminated for purposes of interconnection to trunks. Included are remote switching modules and remote switching systems served by a host office in a different wire center.
End User—Any customer of an intrastate telecommunications service that is not a carrier, except that a carrier other than a telephone company shall be deemed to be an end user when such carrier uses a telecommunications service for administrative purposes.
Entrance Facility—Transport from the customer designated premises to the serving wire center of the customer premises or to an alternate wire center negotiated with the Telephone Company.
Entry Switch—See First Point of Switching.
Equal Level Echo Path Loss—The measure of Echo Path Loss (EPL) at a 4 wire interface which is corrected by the difference between the send and receive Transmission Level Point (TLP). ELEPL = EPL – TLP (send) + TLP (receive).
Exchange—A unit generally smaller than a local access and transport area, established by the Telephone Company for the administration of communications service in a specified area which usually embraces a city, town or village and its environs. It consists of one or more central offices together with the associated facilities used in furnishing communications service within that area. One or more designated exchanges comprise a given local access and transport area.
Exit Message—A Signaling System 7 message sent to an end office by the Telephone Company's tandem switch to mark the carrier connect time when the Telephone Company's tandem switch sends an initial address message to an IC.
Expected Measured Loss—A calculated loss which specifies the end to end 1004 Hz loss on a terminated test connection between two readily accessible manual or remote test points. It is the sum of the inserted connection loss and test access loss including any test pads.
Field Identifier—Two to four characters that are used on service orders to convey specific instructions. Field identifiers may or may not have associated data. Selected field identifiers are used in Telephone Company billing systems to generate NRCs.
First Come First Served—A procedure followed when a shortage of facilities or equipment occurs, such that an access service ordered cannot be installed. The orders delayed by the shortage of facilities will be prioritized according to the sequence in which they were received. That is, when facilities or equipment become available, the first order received will be the first order processed.
First Point of Switching—The first Telephone Company location at which switching occurs on the terminating path of a call proceeding from the customer's premises to the terminating end office and, at the same time, the last Telephone Company location at which switching occurs on the originating path of a call proceeding from the originating end office to the customer's premises.

1. Tariff Information
1.3 Tariff Terminology

1.3.2 Definitions
Frequency Shift—The change in the frequency of a tone as it is transmitted over a channel.
Grandfathered—Terminal equipment, multiline terminating systems and protective circuitry directly connected to the facilities utilized to provide services under the provisions of this tariff, and which are considered grandfathered under Part 68 of the FCC's rules and regulations.
Host Office—An electronic switching system which provides call processing capabilities for one or more remote switching modules or remote switching systems.
Immediately Available Funds—A corporate or personal check drawn on a bank account and funds which are available for use by the receiving party on the same day on which they are received and include US Federal Reserve bank wire transfers, US Federal Reserve notes (paper cash), US coins and US Postal Money Orders.
Impedance Balance—The method of expressing echo return loss and singing return loss at a four wire interface whereby the gains and/or loss of the four wire portion of the transmission path, including the hybrid, are not included in the specification.
Individual Case Basis—A condition in which the regulations (if applicable), rates and charges for an offering under the provisions of this tariff are developed based on the circumstances in each case.
Initial Address Message—A Signaling System 7 message sent in the forward direction to initiate trunk set up with the busying of an outgoing trunk which carries the information about that trunk along with other information relating to the routing and handling of the call to the next switch.
Inserted Connection Loss—The 1004 Hz power difference (in dB) between the maximum power available at the originating end and the actual power reaching the terminating end through the inserted connection.
Interexchange Carrier or Interexchange Common Carrier—Any individual, partnership, association, joint stock company, trust, governmental entity or corporation, other than the Telephone Company, authorized by the PUC and engaged for hire in intrastate communications by wire or radio, between two or more exchanges.
Intermediate Hub—A wire center that provides multiplexing which can serve itself and one or more wire centers within the LATA. In an intermediate hub (wire center), a DS3 or DS1 facility can be multiplexed and the individual switched access channels terminated at customer designated end office or access tandem switch(es) within the local serving area of that wire center. The individual special access channels are terminated at customer designated premises located within the local serving area of that wire center. Individual special access channels can be extended through any designated wire center(s) subtending the intermediate hub within the LATA to terminate at customer designated premises located within the local serving area of each wire center.
Interstate Communications—Both interstate and foreign communications.

1. Tariff Information
1.3 Tariff Terminology

1.3.2 Definitions
Intrastate Communications—Any communications within a state subject to oversight by a state regulatory commission as provided by the laws of the state involved.
Legal Holiday—Days other than Saturday or Sunday on which the Telephone Company is normally closed. These include New Year's Day, Independence Day, Labor Day, Veteran's Day, Thanksgiving Day, Christmas Day and a day when Washington's Birthday, Memorial Day or Columbus Day is legally observed and other locally observed holidays when the Telephone Company is closed.
Lineside Connection—A connection of a transmission path to the line side of a local exchange switching system.
Local Access and Transport Area—A geographic area established for the provision and administration of communications service. It encompasses one or more designated exchanges, which are grouped to serve common social, economic and other purposes.
Local Calling Area—A geographical area as defined in NHPUC No. 83 in which an end user (telephone exchange service subscriber) may complete a call without incurring MTS charges.
Local Tandem Switch—A local Telephone Company switching unit by which local or access telephonic communications are switched to and from an end office switch.
Loss Deviation—The variation of the actual loss from the designed value.
Major Fraction Thereof—Any period of time in excess of one half of the stated amount of time. As an example, in considering a period of 24 hours, a major fraction thereof would be any period of time in excess of 12 hours exactly. Therefore, if a given service is interrupted for a period of 36 hours and 15 minutes, the customer would be given a credit allowance for two 24 hour periods for a total of 48 hours.
Message—A Call.
Network Control Signaling—The transmission of signals used in the telecommunications system which performs functions such as supervision (control, status and charge signals), address signaling (e.g., dialing), calling and called number identifications, rate of flow, service selection error control and audible tone signals (call progress signals indicating reorder or busy conditions, alerting, coin denominations, coin collect and coin return tones) to control the operation of the telecommunications system.
North American Numbering Plan—A three digit area (numbering plan area) code and a seven digit telephone number made up of a three digit central office code plus a four digit station number.
Off Hook—The active condition of switched access or a telephone exchange service line.
On Hook—The idle condition of switched access or a telephone exchange service line.

1. Tariff Information
1.3 Tariff Terminology

1.3.2 Definitions
Operator Services Provider—The interstate provider of operator services to which an end user placing an operator assisted call is connected when the end user's presubscribed IC designates a provider of operator services to handle its operator traffic.
Originating Direction—The use of switched access service for the origination of calls from an end user premises to an IC premises.
Payphone Service Provider—An end user who subscribes to public telephone service under the Telephone Company's general and/or local exchange service tariffs.
Point Code—A unique nine digit numeric identifier that identifies a customer's SS7 capable switch and other SS7 network elements or nodes.
Point of Termination—The demarcation point or network interface, at which the Telephone Company's responsibility for the provision of access service ends (refer to Section 2.3.4). The point of demarcation or network interface is the point of interconnection between Telephone Company communications facilities and customer provided facilities as defined in Section 68.3 of the FCC's rules and regulations.
Premises—A building, or a portion of a building in a multitenant building, or buildings on continuous property (except railroad right of way, etc.).
Public Telephone Service—A Public Access Smart-Pay Line or Public Access Line which is provided under the Telephone Company's general and/or local exchange service tariff.
Remote Node—A Telephone Company building in which remote switching modules and/or remote switching systems are located.
Remote Switching Modules and/or Remote Switching Systems—Small, remotely controlled electronic end office switches which obtain their call processing capability from an ESS type host office and cannot accommodate direct trunks to a customer.
Return Loss—A measure of the similarity between the two impedances at the junction of two transmission paths. The higher the return loss, the higher the similarity.
Service Access Code—A three digit code that takes the place of an NPA in the dialing sequence. Particular services provided by an IC, BOC or independent telephone company, may include but are not limited to 700 (IC Services), 800 (800 Access Service) and 900 (National dial–it network communications service). Service access codes are associated with switched access services that may be ordered by an IC as part of the access services tariff. A Telephone Company may screen calls and route to an IC specified point of presence based upon the SAC dialed.
Service Control Point—The SS7 node where Telephone Company databases reside.
Signaling Point—A switch that is capable of supporting SS7 Signaling.
Signaling Point of Interconnection—The customer designated location, in the same LATA as the Telephone Company STP, where Signaling System 7 signaling information is exchanged between the Telephone Company and the customer.

1. Tariff Information
1.3 Tariff Terminology

1.3.2 Definitions
Signaling System 7 Network—A digital data network carrying signaling information which interfaces with the Telephone Company voice/data network for services using the ANSI CCS7 signaling protocol.
Signaling Transfer Point—A signaling point which routes and/or transfers signaling messages through the common channel signaling network.
Singing Return Loss—The frequency weighted measure of return loss at the edges of the voiceband (200 to 500 Hz and 2500 to 3200 Hz), where singing (instability) problems are most likely to occur.
Subtending End Office of an Access Tandem—An end office that has final trunk group routing through that tandem.
Super-Intermediate Hub—A wire center that serves itself and/or subtending wire centers in an entire LATA or within one or more specific NPA(s) in a LATA for the provision of multiplexing (DS3 to DS1 or DS1 to Voice). In this super-intermediate hub (wire center) a DS3 or DS1 facility can be multiplexed and the individual channels terminated at customer designated end office or access tandem switches, or at customer designated premises located within the local serving area of this super-intermediate hub. The individual channels can be extended through its subtending wire center(s) to terminate at customer designated premises located within the local serving area of each subtending wire center.
Switching Point Code—A unique nine character, numeric code that identifies a switch that is supported by SS7 Signaling. (See Point Code)
Switching Systems—The hardware and/or software utilized by the Telephone Company for the establishment and maintenance of a given central office.
Tandem Switched Transport—Transport of switched access service to an end office that includes switching at the tandem.
Telephone Company—Verizon New England Inc. unless otherwise stated. Verizon New England Inc. also does business under the name Verizon New Hampshire. Advertising and billing of customers are done under the name Verizon New England Inc.
Terminating Direction—The use of switched access service for the completion of calls from a customer premises to an end user premises.
Terminus Hub—A wire center in which a DS3 or DS1 facility can be mulitplexed into individual channels. A terminus hub serves only customers in the wire center in which the multiplexing is performed.
Traffic Type—Three major types of traffic identified as originating, terminating and directory assistance. Originating traffic type represents access capacity within a LATA for carrying traffic from the end user to the customer. Terminating traffic type represents access capacity within a LATA for carrying traffic from the customer to the end user. Directory assistance traffic type represents access capacity within a LATA for carrying directory assistance traffic from the customer to a directory assistance location.

1. Tariff Information
1.3 Tariff Terminology

1.3.2 Definitions
Transmission Path—An electrical path capable of transmitting signals within the range of the service offering, (e.g., a voice grade transmission path is capable of transmitting voice frequencies within the approximate range of 300 to 3000 Hz). A transmission path is comprised of physical or derived channels consisting of any form or configuration of facilities plant typically used in the telecommunications industry.
Trunk—A transmission path connecting two switching systems in a network, used in the establishment of an end to end connection.
Trunk Circuit Identification Code—The number assigned to each switched trunk to identify it to the SS7 signaling system.
Trunk Group—A set of trunks which are traffic engineered as a unit for the establishment of connections between switching systems in which all of the communications paths are interchangeable.
Trunkside Connection—The connection of a transmission path to the trunk side of a local exchange switching system.
Two Wire to Four Wire Conversion—An arrangement which converts a four wire transmission path to a two wire transmission path to allow a four wire facility to terminate in a two wire entity (e.g., a central office switch).
Uniform Service Order Code—A three or five character alphabetic, numeric or an alphanumeric code that identifies a specific item of service or equipment. USOCs are used in the Telephone Company billing system to generate recurring rates and NRCs.
V and H Coordinates Method—A method of computing airline miles between two points by utilizing an established formula which is based on the vertical and horizontal coordinates of the two points.
WATS Serving Office—A Telephone Company designated serving wire center where switching, screening and/or recording functions are performed in connection with the closed end of WATS or WATS type services.
Wire Center—A building in which one or more central offices, used for the provision of telephone exchange services are located.
Wireless Carriers—Carriers which are regulated under Parts 22 and 90 of the FCC's rules and regulations.

2. General Regulations

2.1 Application of Tariff

2.1.1	Scope
A.	This tariff contains regulations, rates and charges applicable to switched access services and other miscellaneous services, hereinafter referred to collectively as service(s), provided by Verizon New England Inc., hereinafter referred to as the Telephone Company, to interexchange carriers and wireless carriers, including resellers or other entities engaged in the provision of public utility common carrier services which utilize the network of the Telephone Company, who are certified to provide such services by the PUC.
B.	For purposes of administering this tariff, such interexchange carriers and wireless carriers, including resellers or other entities engaged in the provision of public utility common carrier services which utilize the network of the Telephone Company, who are certified to provide such services by the PUC, are hereinafter referred to as customers.

2. General Regulations
2.2 Use of Service

2.2.1	General
A.	A customer, authorized by the PUC, offering public utilities common carrier services will receive service under NHPUC No. 85, as set forth in Section 2.1.

2.2.2	Lawful Use
A.	The service provided under this tariff shall not be used for an unlawful purpose.

2.2.3	Access Service Connections
A.	Equipment and systems (i.e., terminal equipment, multiline terminating systems and communications systems) may be connected with switched access service furnished by the Telephone Company where such connection is made in accordance with the provisions stated in Section 2 and in technical reference PUB AS No. 1.

2.2.4	Title or Ownership Rights
A.	The payment of rates and charges by customers for the services offered under the provisions of this tariff does not assign, confer or transfer title or ownership rights to proposals or facilities developed or utilized respectively, by the Telephone Company in the provision of such services.

2.2.5	Minimum Periods of Service
A.	The minimum periods for which services and monthly rated optional features are provided and for which rates and charges are applicable is one month.
B.	When a service is discontinued prior to the expiration of the minimum period, charges are applicable, whether the service is used or not. The applicable charge will be the total monthly charges, at the rate level in effect at the time service is discontinued, for the remainder of the minimum period plus all applicable NRCs.

2. General Regulations
2.3 Responsibility of the Telephone Company

2.3.1	Limitations
A.	The Telephone Company does not undertake to transmit messages under this tariff.
B.	The Telephone Company will, for maintenance purposes, test its services only to the extent necessary to detect and/or clear troubles.
C.	The Telephone Company does not warrant that its facilities and services meet standards other than those set forth in this tariff.
D.	The provision of such services by the Telephone Company as set forth in this tariff does not constitute a joint undertaking with the customer for the furnishing of any service.

2.3.2	Liability
A.	The Telephone Company's liability, if any, for its willful misconduct is not limited by this tariff.
B.	With respect to any other claim or suit, by a customer or by any others, for damages associated with the installation, provision, termination, maintenance, repair or restoration of service, and subject to the provisions contained in Section 2.3.2C, through 2.3.2G, the Telephone Company's liability, if any, shall not exceed an amount equal to the proportionate charge for the service for the period during which the service was affected. This liability for damages shall be in addition to any amounts that may otherwise be due the customer under this tariff as a credit allowance for a service interruption.
C.	The Telephone Company shall not be liable for any act or omission of any other carrier or customer providing a portion of a service, nor shall the Telephone Company for its own act or omission hold liable any other carrier or customer providing a portion of a service.
D.	The Telephone Company is not liable for damages to the customer's premises resulting from the furnishing of a service, including the installation and removal of equipment and associated wiring, unless the damage is caused by the Telephone Company's negligence.
E.	The Telephone Company shall be indemnified, defended and held harmless by the end user or customer against any claim, loss or damage arising from the end user's use or the customer's use of services offered under this tariff, involving:
1.	Claims for libel, slander, invasion of privacy, or infringement of copyright arising from the end user's or customer's own communications;
2.	Claims for patent infringement arising from the end user's or customer's acts combining or using the service furnished by the Telephone Company in connection with facilities or equipment furnished by the end user or customer; or
3.	All other claims arising out of any act or omission of the end user or customer in the course of using services provided pursuant to this tariff.

2. General Regulations
2.3 Responsibility of the Telephone Company

2.3.2	Liability
F.	The Telephone Company does not guarantee or make any warranty with respect to its services when used in an explosive atmosphere. The Telephone Company shall be indemnified, defended and held harmless by the customer from any and all claims by any person relating to the customer's use of services so provided.
G.	No license under patents (other than the limited license to use) is granted by the Telephone Company or shall be implied or arise by estoppel, with respect to any service offered under this tariff. The Telephone Company will defend the customer against claims of patent infringement arising solely from the use by the customer of services offered under this tariff and will indemnify such customer for any damages awarded based solely on such claims.
H.	The Telephone Company's failure to provide or maintain services under this tariff shall be excused by governmental orders, civil commotions, criminal actions taken against the Telephone Company, acts of God and other circumstances beyond the Telephone Company's reasonable control, subject to the credit allowance for a service interruption as set forth in Section 4.2.
I.	The Telephone Company shall be responsible only for the installation, operation and maintenance of the services it provides.

2.3.3	Provision of Service
A.	The use, installation and restoration of services shall be in accordance with Part 64.401, Appendix A, of the FCC's rules and regulations, which specifies the priority system for such activities. Subject to compliance with those rules, where a shortage of facilities or equipment exists at any time, either for temporary or protracted periods, the services offered herein will be provided to customers on a first come, first served basis.
B.	The services offered under the provisions of this tariff are subject to availability. The Telephone Company, to the extent that such services are or can be made available with reasonable effort, and after provision has been made for the Telephone Company's telephone exchange services, will provide to the customer upon reasonable notice services offered in other applicable sections of this tariff at rates and charges specified therein.
C.	Services are provided 24 hours daily, seven days per week, except as set forth in other applicable sections of this tariff.

2. General Regulations
2.3 Responsibility of the Telephone Company

2.3.4	Installation and Point of Termination of Service
A.	The access services provided under this tariff include Telephone Company communication facilities up to the POT (as defined in Section 1.6), which denotes the demarcation point, and will be installed by the Telephone Company to such POT. If the POT is moved subsequent to the original installation, the charges described in Section 6.6.1 for switched access services apply as appropriate. Any additional terminations at the customer's premises beyond such POT are the sole responsibility of the customer.

2. General Regulations
2.4 Customer Notification and Coordination

2.4.1	Changes and Substitutions
A.	Except as provided for equipment and systems subject to FCC Part 68 Regulations at 47 C.F.R. Section 68.110(b), the Telephone Company may, where such action is reasonably required in the operation of its business substitute, or change or rearrange certain facilities, equipment, criteria, characteristics, operations or procedures as follows.
1.	Substitute, change or rearrange any facilities used in providing service under this tariff, including but not limited to:
a.	Substitution of different metallic facilities
b.	Substitution of carrier or derived facilities for metallic facilities used to provide other than metallic facilities, and
c.	Substitution of metallic facilities for carrier or derived facilities used to provide other than metallic facilities;
2.	Change minimum protection criteria,
3.	Change operating or maintenance characteristics of facilities or,
4.	Change operations or procedures of the Telephone Company.
B.	In case of any such substitution, change or rearrangement, the transmission parameters will be within the range as set forth in Section 6.4.2. The Telephone Company shall not be responsible if any such substitution, change or rearrangement renders any customer furnished services obsolete or requires modification or alteration thereof or otherwise affects their use or performance. If such substitution, change or rearrangement materially affects the operating characteristics of the facility, the customer will be given adequate notice in writing. Reasonable time will be allowed for any redesign and implementation required by the change in operating characteristics. The Telephone Company will work cooperatively with the customer to determine reasonable notification requirements.

2.4.2	Refusal and Discontinuance of Service	
A.	Unless the provisions of Section 2.4.5B apply, if the customer fails to comply with Sections 2.2.2, 2.5.1A, 2.5.2A, 2.5.5, 2.5.7, 2.5.10 or Section 4, including any payments to be made by it on the dates and times herein specified, the Telephone Company may, on 30 days written notice by Certified US Mail to the person designated by the customer to receive such notices of noncompliance, refuse additional applications for service and/or refuse to complete any pending orders for service at any time thereafter. If the Telephone Company does not refuse additional applications for service on the date specified in the 30 days' notice, and the customer's noncompliance continues, nothing contained herein shall preclude the Telephone Company's right to refuse additional applications for service without further notice.	(C)

2. General Regulations
2.4 Customer Notification and Coordination

2.4.2	Refusal and Discontinuance of Service
B.	Unless the provisions of Section 2.4.5B apply, if the customer fails to comply with Sections 2.5.1A, 2.2.2, 2.5.2A, 2.5.5, 2.5.7 or Section 4, including any payments to be made by it on the dates and times herein specified, the Telephone Company may, on 30 days written notice by Certified US Mail to the person designated by the customer to receive such notices of noncompliance, discontinue the provision of the services involved at any time thereafter. In the case of such discontinuance, all applicable charges, including termination charges, shall become due. If the Telephone Company does not discontinue the provision of the services involved on the date specified in the 30 days notice, and the customer's noncompliance continues, nothing contained herein shall preclude the Telephone Company's right to discontinue the provision of the services involved without further notice.

2.4.3	Service Affecting Activities
A.	The Telephone Company will provide the customer timely notification of service affecting activities that may occur in normal operation of its business. Such activities may include, but are not limited to: equipment or facilities additions, removals or rearrangements, routine preventative maintenance, and major switching machine change out. Generally, such activities are not individual customer service specific; they affect many customer services.
1.	No specific advance notification period is applicable to all service activities. The Telephone Company will work cooperatively with the customer to determine the reasonable notification requirements. With some emergency or unplanned service affecting conditions, such as an outage resulting from cable damage, notification to the customer may not be possible.

2.4.4	Provision and Ownership of Telephone Numbers
A.	The Telephone Company reserves the reasonable right to assign, designate or change telephone numbers, any other call number designations associated with access services, or the Telephone Company serving central office prefixes associated with such numbers, when necessary in the conduct of its business.
B.	Should it become necessary to make a change in such number(s), the Telephone Company will furnish to the customer six months notice, by Certified US Mail, of the effective date and an explanation of the reason(s) for such change(s). In the case of emergency conditions, however, (e.g., a fire in a wire center), it may be necessary to change a telephone number without six month's notice in order to provide service to the customer.

2. General Regulations
2.4 Customer Notification and Coordination

2.4.5	Interference or Impairments
A.	The characteristics and methods of operation of any circuits, facilities or equipment provided by other than the Telephone Company and associated with the facilities utilized to provide services under this tariff shall not interfere with or impair service over any facilities of the Telephone Company, its affiliated companies, or its connecting and concurring carriers involved in its services, cause damage to their plant, impair the privacy of any communications carried over their facilities or create hazards to the employees of any of them or the public.
B.	Except as provided for equipment or systems subject to the FCC Part 68 Rules in 47 C.F.R. Section 68.108, if such characteristics or methods of operation are not in accordance with the preceding paragraph, the Telephone Company will, where practicable, notify the customer that temporary discontinuance of the use of a service may be required; however, where prior notice is not practicable, nothing contained herein shall be deemed to preclude the Telephone Company's right to temporarily discontinue forthwith the use of a service if such action is reasonable under the circumstances. In case of such temporary discontinuance, the customer will be promptly notified and afforded the opportunity to correct the condition which gave rise to the temporary discontinuance.
1.	During such period of temporary discontinuance, credit allowance for service interruptions as set forth in Section 4.2 is not applicable.

2.4.6	Customer Coordination with Respect to Network Contingencies
A.	The Telephone Company intends to work cooperatively with the customer to develop network contingency plans in order to maintain maximum network capability following natural or man made disasters which affect telecommunications services, in accordance with Part 64.401, Appendix A of the FCC's rules and regulations.

2. General Regulations
2.5 Responsibility of The Customer

2.5.1	Scope
A.	The services provided under this tariff shall be maintained by the Telephone Company. The customer or others may not rearrange, move, disconnect, remove or attempt to repair any facilities provided by the Telephone Company, other than by connection or disconnection to any interface means used, except with the written consent of the Telephone Company.
B.	The customer may not assign or transfer the use of services provided under this tariff; however, where there is no interruption of use or relocation of the services, such assignment or transfer may be made to:
1.	Another customer, whether an individual, partnership, association or corporation, provided the assignee or transferee assumes all outstanding indebtedness for such services, and the unexpired portion of the minimum period and the termination liability applicable to such services, if any; or
2.	A court appointed receiver, trustee or other person acting pursuant to law in bankruptcy, receivership, reorganization, insolvency, liquidation or other similar proceedings, provided the assignee or transferee assumes the unexpired portion of the minimum period and the termination liability applicable to such services, if any.
C.	In all cases of assignment or transfer, the written acknowledgment of the Telephone Company is required prior to such assignment or transfer which acknowledgment shall be made within fifteen days from the receipt of notification. All regulations and conditions contained in this tariff shall apply to such assignee or transferee.
D.	The assignment or transfer of services does not relieve or discharge the assignor or transferor from remaining jointly or severally liable with the assignee or transferee for any obligations existing at the time of the assignment or transfer.

2.5.2	Liability
A.	The customer shall reimburse the Telephone Company for damages to Telephone Company facilities utilized to provide services under this tariff caused by the negligence or willful act of the customer or resulting from the customer's improper use of the Telephone Company facilities, or due to malfunction of any facilities or equipment provided by other than the Telephone Company. Nothing in the foregoing provision shall be interpreted to hold one customer liable for another customer's actions. The Telephone Company will, upon reimbursement for damages, cooperate with the customer in prosecuting a claim against the person causing such damage and the customer shall be subrogated to the right of recovery by the Telephone Company for the damages to the extent of such payment.

2. General Regulations
2.5 Responsibility of The Customer

2.5.2	Liability
B.	With respect to claims of patent infringement made by third persons, the customer shall:
1.	Defend, indemnify, protect and save harmless the Telephone Company from and against all claims arising out of the combining with, or use in connection with, the services provided under this tariff, any circuit, apparatus, system or method provided by the customer.
C.	The customer shall defend, indemnify and save harmless the Telephone Company from and against suits, claims, losses or damages including punitive damages, attorneys' fees and court cost by third persons arising out of the construction, installation, operation, maintenance or removal of the customer's circuits, facilities, or equipment connected to the Telephone Company's services provided under this tariff, including, without limitation, workmen's compensation claims, actions for infringement of copyright and/or unauthorized use of program material, libel and slander actions based on the content of communications transmitted over the customer's circuits, facilities or equipment, and proceedings to recover taxes, fines, or penalties for failure of the customer to obtain or maintain in effect any necessary certificates, permits, licenses, or other authority to acquire or operate the services provided under this tariff; provided, however, the foregoing indemnification shall not apply to suits, claims, and demands to recover damages for damage to property, death or personal injury unless such suits, claims or demands are based on the tortious conduct of the customer, its officers, agents or employees.
D.	The customer shall defend, indemnify and save harmless the Telephone Company from and against any suits, claims, losses or damages, including punitive damages, attorneys' fees and court costs by the customer or third parties arising out of any act or omission of the customer in the course of using services provided under this tariff.

2.5.3	Ownership of Facilities and Theft
A.	Facilities utilized by the Telephone Company to provide service under the provisions of this tariff shall remain the property of the Telephone Company. Such facilities shall be returned to the Telephone Company by the customer, whenever requested, within a reasonable period following the request in as good condition as reasonable wear will permit.

2. General Regulations
2.5 Responsibility of The Customer

2.5.4	Equipment Space and Power
A.	The customer shall furnish or arrange to have furnished to the Telephone Company, at no charge, equipment space and electrical power required by the Telephone Company to provide services under this tariff at the points of termination of such services. The selection of ac or dc power shall be mutually agreed to by the customer and the Telephone Company. The customer shall also make necessary arrangements in order that the Telephone Company will have access to such spaces at reasonable times for installing, testing, repairing or removing Telephone Company services.

2.5.5	Availability for Testing
A.	The services provided under this tariff shall be available to the Telephone Company at times mutually agreed upon in order to permit the Telephone Company to make tests and adjustments appropriate for maintaining the services in satisfactory operating condition. Such tests and adjustments shall be completed within a reasonable time. No credit will be allowed for any interruptions involved during such tests and adjustments.

2.5.6	Coordination with Respect to Network Contingencies
A.	The customer shall, in cooperation with the Telephone Company, coordinate in planning the actions to be taken to maintain maximum network capability following natural or man made disasters which affect telecommunications services.

2.5.7	Balance, Current and Noise
A.	All signals for transmission over the services provided under this tariff shall be delivered by the customer balanced to ground except for ground start, duplex (DX) and McCulloh Loop (alarm system) type signaling and dc telegraph transmission at speeds of 75 baud or less.
B.	Signals applied to a metallic facility shall conform to the limitations set forth in technical reference PUB AS No. 1. In the case of application of dc telegraph signaling systems, the customer shall be responsible, at its expense, for the provision of current limiting devices to protect the Telephone Company facilities from excessive current due to abnormal conditions and for the provision of noise mitigation networks when required to reduce excessive noise.

2.5.8	Design of Customer Services
A.	Subject to the provisions of Section 2.4.1, the customer shall be solely responsible, at its own expense for the overall design of its services and for any redesigning or rearrangement of its services which may be required because of changes in facilities, operations or procedures of the Telephone Company, minimum protection criteria or operating or maintenance characteristics of the facilities.

2. General Regulations
2.5 Responsibility of The Customer

2.5.9 References to the Telephone Company

A. The customer may advise end users that certain services are provided by the Telephone Company in connection with the service the customer furnishes to end users; however, the customer shall not represent that the Telephone Company jointly participates in the customer's services. (C)

2.5.10 Jurisdictional Report Requirements

A. The regulations set forth in this section apply for purposes of determining the jurisdiction of Switched Access Services.

B. Percent Interstate Usage (PIU)

1. For purposes of developing the projected interstate percentage for Feature Group D, the customer shall consider every call, that originates from a calling party in one state and terminates to a called party in a different state, to be interstate communications. The customer shall consider every call that terminates to a called party within the same state as the state where the calling party is located, to be intrastate communications. The manner in which a call is routed through the telecommunications network does not affect the jurisdiction of a call; i.e., a call between two points within the same state is an intrastate call even if it is routed through another state.

2. For Feature Group A and Feature B, pursuant to Federal Communications Commission order FCC 85-145 adopted April 16, 1985, interstate usage is to be developed as though every call, that enters a customer network at a point within the same state as that in which the called station is situated, is an intrastate communication and every call, that enters a customer's network at a point in a state other than that where the called station is situated, is an interstate communication.

3. When the Telephone Company receives sufficient call detail to permit it to determine the jurisdiction of some or all originating and terminating access minutes of use, the Telephone Company will use that call detail to render bills for those minutes of use and will not use customer reported Percent Interstate Usage (PIU) factors to determine the jurisdiction of those minutes of use.

4. The Telephone Company will apply the PIU factor, either provided by the customer as set forth in (B)(5) or as otherwise determined in accordance with this tariff, only to minutes of use for which the Telephone Company does not have sufficient call detail to determine jurisdiction. The customer reported PIU factor will be used until the customer provides an updated PIU factor, as set forth in (D) following or as determined in (F) following. No prorating or back billing will be done based on the updated report. (C)

2. General Regulations
2.5 Responsibility of The Customer

2.5.10 Jurisdictional Report Requirements		
B.	(Continued)	
5.	When the customer initially orders Switched Access Service(s) the customer will state in its order (Access Service Request) a Percent Interstate Usage factor. This factor will be used by the Telephone Company as the customer-provided PIU factor until the customer provides updated PIU factors, as required in (D) following or as determined in (F) following. For each service listed below, the customer may provide separate PIU factors in accordance with B(1) and B(2) preceding. - Feature Group A (Notes 1,2) - Feature Group B (Notes 1,2) - Feature Group D (Notes 1,2) - 800 Database Access Service (Notes 1,2,3) **Note 1:** The customer has the option to provide the Telephone Company with both an originating and a terminating PIU factor for each account from which the customer may originate and/or terminate traffic. **Note 2:** The Percent Interstate Usage (PIU) factors will apply to all associated elements and services, e.g., Carrier Common Line, Local Switching, Tandem Switched Transport, Access Tandem Switching, Common and Trunk Port service. **Note 3:** 800 Database Access service includes any access service which utilizes the following NPAs: 800, 888, 877, 866, 855, 844, 833, and 822 as they become available to the industry.	(C)
6.	When the customer provides PIU factors, the Telephone Company will subtract the developed PIU from 100 and the difference is the percent intrastate usage. The sum of the interstate and intrastate percentages will equal 100 percent. The customer may only provide a PIU factor that is a whole number (a number from 0 to 100).	
7.	Where the customer provides access services to other carriers, the customer will develop its projected PIU factor based upon a weighted average of the PIUs of its own and of the other carriers' end user traffic, in accordance with the procedures described below.	(C)

2. General Regulations
2.5 Responsibility of The Customer

2.5.10. Jurisdictional Report Requirements

C. **Switched Access Service Entrance Facilities, Direct Trunked Transport** - Customers will provide PIU factors and jurisdictional reports for Switched Access Entrance Facilities and Direct-Trunked Transport ordered pursuant to this tariff, reflecting all Switched Access services using these facilities as set forth in (1) following: (C)

1. **Entrance Facilities and Direct Trunked Transport Facilities**

a. The customer may provide separate PIU factors that will apply to the Entrance Facilities and the Direct Trunked portion of the facility account. These PIU factors should account for the originating and terminating traffic of all services using these facilities

b If a customer has previously submitted a letter to be placed on file which identifies individual PIU factors, the customer has the option of stating in its orders that the PIU factors contained in its letter on file (LOF) be applied to the facilities contained in the order. This PIU factor may be provided at the account level or for each individual facility.

c If a customer is providing or sharing a facility with other carriers, the PIU for the Entrance Facilities and Direct Trunked Transport may be developed using multiple PIU factors. The calculation to determine the facility PIU using factors must be provided with the quarterly jurisdictional report.

D. **Jurisdictional Report Updates**

1. Effective on the first of January, April, July and October of each year, the customer will update the interstate and intrastate jurisdictional reports. The customer will forward to the Telephone Company, to be received no later than 20 days after the first of each such month, a revised report or letter for all services showing the interstate percentage of use for the past three months ending the last day of December, March, June and September, respectively, for each service arranged for interstate and intrastate use.

2. The revised report or letter will serve as the basis for the next three months' billing and will be effective on the bill date for that service. If the customer does not supply an updated quarterly report or letter, the Telephone Company will assume percentages to be the same as those provided in the last quarterly report or letter accepted by the Telephone Company or as determined by the provisions contained in (F) following.

3. For those cases in which a quarterly report or letter has never been received from the customer, the Telephone Company will assume the PIU factors to be the same as provided in the order for service. (C)

2. General Regulations
2.5 Responsibility of The Customer

2.5.10 Jurisdictional Report Requirements

E. **Maintenance of Customer Records** (C)

1. The customer shall retain for a minimum of twelve months call detail records that substantiate the interstate percent provided to the Telephone Company as set forth in (B), (C) and (D) preceding for Switched Access Service. Such records shall consist of (a) and (b) following, if applicable:

a. All call detail records such as work papers and/or backup documentation including paper, magnetic tapes or any other form of records for billed customer traffic, call information including call terminating address (i.e., called number), the call duration, all originating and terminating trunk groups or access lines over which the call is routed, and the point at which the call enters the customer's network and;

b. If the customer has a mechanized system in place that calculated the PIU, then a description of that system and the methodology used to calculate the PIU must be furnished and any other pertinent information (such as but not limited to flowcharts, source code, etc.) relating to such system must also be made available.

F. **Jurisdictional Report Verification**

1. The Telephone Company may request the customer to verify their jurisdictional reports. The customer shall keep records of call detail from which the percentage of interstate and intrastate use can be ascertained. The Telephone Company will request the customer to provide the records of call detail and other information (as specified in (E) preceding) that the customer used to determine the percentage of interstate and intrastate use. No more than one verification request will be made per year.

a. The Customer shall supply the data to the Telephone Company within 30 days of the Telephone Company request. The Telephone Company will request data for the four prior quarters unless a shorter period is requested by the Customer and agreed to by the Telephone Company.

2. If the PIU factors filed by the customer cannot be validated by the data provided, and the data provided by the customer is sufficient to calculate a PIU factor different than the customer's reported PIU factor, the Telephone Company will use these records to:

a. Revise the customer's PIU factor.

b. Calculate the interstate and intrastate access charges that should have been billed to the customer for the prior period (as specified in (E) preceding), that the inaccurate PIUs had been used and debit or credit the customer for the difference between the charges that should have been billed with the revised PIU and the charges that were billed. (C)

2. General Regulations
2.5 Responsibility of The Customer

2.5.10 Jurisdictional Report Requirements

F. Continued (C)

3. If the customer fails to supply data (as specified in (E) preceding) within 45 calendar days of the Telephone Company's request, sufficient for the Telephone Company to substantiate or determine PIU factors, then:

a. The Telephone Company will apply a default PIU factor of 50% to the traffic for which the Telephone Company does not have sufficient call detail to determine the jurisdiction of the traffic ("unknown jurisdiction" usage) (i.e., 50% of the unknown jurisdiction usage will be billed under the interstate jurisdiction and 50% of the unknown jurisdiction usage will be billed under the intrastate tariff) in lieu of the PIU factors last submitted by the customer

b. The Telephone Company will apply the default PIU factor to all future access minutes of use with unknown jurisdiction beginning with the first bill date following the 45 calendar day period during which the customer was to submit the records of call detail requested by the Telephone Company. The application of the default PIU factor will continue until the customer provides the Telephone Company with records of call detail or other data that are sufficient for the Telephone Company to substantiate the customer-provided PIU factors.

G. **Contested Jurisdictional Reports**

1. If after reviewing the data provided by the customer the Telephone Company determines that that the customer-provided PIUs are inaccurate, the Telephone Company will report the results of the analysis to the customer by Certified U.S. Mail (return receipt requested). The Telephone Company will request that the customer provide updated PIU factors consistent with those contained in the Telephone Company's report.

2. If the Telephone Company applies the revised or default PIU factor to the customer's account as provided in (F) preceding in lieu of the customer-provided PIU factor, the customer may contest application of the default PIU by providing written notification, by Certified U.S. Mail (return receipt requested), to the Telephone Company within thirty (30) calendar days from the date the revised or default PIU is applied or the date that the Telephone Company provides notice to the customer of its decision to apply the revised or default PIU. The customer may request that the dispute be resolved by a neutral arbitrator mutually agreed upon by the Telephone Company and the customer. Arbitration is an option provided in addition to the customer's existing right to file a complaint or legal action in a court of law or at the New Hampshire Public Utilities Commission for resolution of the dispute. The arbitration hearing will be conducted in a location within the Telephone Company operating territory where the customer maintains its principal place of business or at a location within the Telephone Company operating territory that is mutually agreed upon by both parties. The arbitration procedures shall be governed by the law (both statutory and case) of the state in which the arbitration hearing is held, including, but not limited to, the Uniform Arbitration Act, as adopted. The arbitrator shall determine the customer's PIU for each category of traffic based on the standards in (B) and (C) preceding. (C)

2. General Regulations
2.5 Responsibility of The Customer

2.5.10 Jurisdictional Report Requirements

G. Continued (C)

3. Prior to the arbitration hearing, each party shall notify the arbitrator of the PIU factor(s) which that party believes to be correct. The arbitrator, in deciding, may adopt the PIU percentage of either party or may adopt a PIU different from those proposed by the parties. If the arbitrator adopts a PIU proposed by one of the parties, the other party (whose PIU was not adopted) shall pay all costs of the arbitration. If the arbitrator adopts a PIU percentage higher than either of the PIU proposed by the parties, then the party proposing the lower PIU shall pay all costs of the arbitration. If the arbitrator adopts a PIU lower than either of the PIU proposed by the parties, then the party proposing the higher PIU shall pay all costs of the arbitration. If the arbitrator adopts a PIU which falls between the two percentages adopted by the parties, then the parties shall each pay one-half of the arbitration costs.

4. The PIU factor(s) for each category of traffic determined by the arbitrator will be applied by the Telephone Company to all future access minutes of use with unknown jurisdiction from that customer until the customer provides the Telephone Company with records of call detail or other data that are sufficient for the Telephone Company to substantiate the customer-provided PIU factors.

5. Absent the customer's written notification, within the timeframe noted above, the customer must comply with the provisions set forth in (E) and (F) preceding. If the customer fails to comply with these provisions, the customer will be in violation of this Tariff and the Telephone Company may refuse additional applications for service and/or refuse to complete any and all pending orders for service or may discontinue the provision of services to the customer as specified in Section 2.4.2 preceding.

6. The Telephone Company retains the right to pursue any and all other legal remedies, whether in addition to, or in lieu of, the above procedures, to recover any under-billed switched access charges associated with incorrect customer-provided PIU factors under the applicable interstate or intrastate tariffs. (C)

2. General Regulations
2.5 Responsibility of The Customer

2.5.11	Determination of Intrastate Charges for Mixed Interstate and Intrastate Access Service
A.	When mixed interstate and intrastate access service is provided, all charges (i.e., NRC, monthly and/or usage) including optional features charges, will be prorated between interstate and intrastate. The percentages (refer to Section 2.5.10) will serve as the basis for calculating the charges. The intrastate percentages will change as revised usage reports are submitted or a revised percentage is calculated as set forth in Section 2.5.10. The percentages of an access service to be charged as intrastate are applied in the following manner.
1.	For monthly and/or usage and nonrecurring chargeable rate elements associated with access services, multiply the intrastate percent times the quantity of chargeable elements times the state tariff rate per element.
2.	For usage sensitive (i.e., access minutes) chargeable rate elements, multiply the percent intrastate use times actual use (i.e., measured or Telephone Company assumed average use) times the state tariff rates.

3. Ordering of Service

3.1 Ordering, Rating and Billing of Access Services Where More Than One Exchange Telephone Company is Involved

3.1.1	General
A.	Regulations, rates and charges for ordering provisions applicable to switched access service offered and ordered under this tariff are the same as those set forth in Bell Atlantic Telephone Companies Tariff FCC No. 11, Section 5 and Section 6.1.7.
1.	In addition, the following regulations apply. Provisions for the cancellation of an order for service are set forth in Bell Atlantic Telephone Companies Tariff FCC No. 11, Section 5.2.3.

3.1.2	Meet Point Billing
A.	**General**— Where more than one exchange telephone company is involved in the provision of access service the Telephone Company will handle ordering, rating and billing of access services under this tariff as follows.
1.	The regulations contained herein are illustrated in Exhibit 3.1.2-1.
B.	**FGC Availability**— For regulations pertaining to FGC, note that as of August 21, 1992 FGC is available from end offices in operating territories of only exchange telephone companies other than New England Telephone.
C.	When service(s) is provided where one end of the local transport element is in the Telephone Company operating territory and the other is in another exchange telephone company operating territory, the customer will provide on the first business day of each calendar month a record of usage data and the other exchange telephone company associated with it. This information will be used to calculate billing.
D.	Each exchange telephone company will provide the portion of the local transport element in its operating territory to an IP with another exchange telephone company and will bill the charges in accordance with its access service tariff. The charges for the local transport element will be determined as described in Section 3.1.2K and 3.1.2L. All other appropriate charges in each exchange telephone company tariff are applicable.
E.	The IP will be determined by the exchange telephone companies involved.

3. Ordering of Service

3.1 Ordering, Rating and Billing of Access Services Where More Than One Exchange Telephone Company is Involved

3.1.2	Meet Point Billing
F.	When a WAL service is ordered and channel mileage applies (i.e., the WATS service office and the end user's end office are not coterminous) and one end of the channel mileage element is in the Telephone Company operating territory and the other end is in another exchange telephone company operating territory, the exchange telephone company in whose operating territory the end office is located must receive the order from the customer. The exchange telephone company in whose territory the WSO is located must also receive a copy of the order from the customer. Each exchange telephone company will provide the portion of the channel mileage element in its operating territory to an IP with another exchange telephone company and will bill the charges in accordance with its access service tariff. The rate for the channel mileage element will be determined as described in Section 3.1.2K and 3.1.2L. All other appropriate charges in each exchange telephone company tariff are applicable.
G.	When FGA switched access service is ordered by a customer where one end of the local transport element is in the Telephone Company operating territory and the other end is in another exchange telephone company operating territory, the exchange telephone company in whose territory the first point of switching is located will accept the order.
1.	The exchange telephone company in whose territory the customer point of termination is located must also receive a copy of the order from the customer.
2.	The exchange telephone company that accepts the order will then determine the charges involved, arrange to provide the access service ordered and bill the charges in accordance with its access service tariff.
H.	When an FGB switched access service is ordered by a customer where one end of the local transport element is in the Telephone Company operating territory and the other end is in another exchange telephone company operating territory, and when notified by the Telephone Company which accepts the order that the involved exchange telephone companies cannot implement multi-company billing (meet point billing), ordering, provisioning, rating and billing regulations, as set forth for FGA in the preceding paragraphs will also apply to FGB.
I.	Except as set forth in Section 3.1.2H, when FGB, FGC and/or FGD switched access service and/or directory assistance service is ordered by a customer where one end of the local transport element is in the Telephone Company operating territory and the other end is in another exchange telephone company operating territory, the orders shall be received as follows.
1.	For FGC and/or directory assistance service, the exchange telephone company in whose operating territory the end office is located must receive the order from the customer. The exchange telephone company in whose territory the customer premises is located must also receive a copy of the order from the customer.

3. Ordering of Service

3.1 Ordering, Rating and Billing of Access Services Where More Than One Exchange Telephone Company is Involved

3.1.2	Meet Point Billing
I.	(Continued)
2.	For FGB and/or FGD switched access service ordered to an end office, the exchange telephone company in whose operating territory the end office is located must receive the order from the customer. The exchange telephone company in whose territory the customer premises is located must also receive a copy of the order from the customer.
3.	For FGB and/or FGD switched access service ordered to an access tandem, the exchange telephone company in whose territory the access tandem is located must receive the order from the customer. The exchange telephone company in whose territory the customer premises is located must also receive a copy of the order from the customer.
J.	When switched access service involving a hub is ordered by a customer where one end of the channel mileage element is in an exchange telephone company operating territory and the hub is in another exchange telephone company operating territory, the exchange telephone company in whose territory the hub is located must receive the order from the customer. The exchange telephone company in whose territory a customer premises is located must receive copies of the order from the customer. Each exchange telephone company will provide the portion of the channel mileage element in its operating territory to an IP with another exchange telephone company and will bill the charges in accordance with its access service tariff. The rate for the channel mileage element will be determined as set forth in Section 3.1.2K. All other appropriate charges in each exchange telephone company tariff are applicable.
K.	The provisions of meet point billing are applicable to local transport termination and facility and switched access channel mileage recurring charges only. All other recurring charges and NRCs for services provided by each exchange telephone company are billed under each company's applicable rates.
1.	Determine the appropriate local transport facility or switched access or special access channel mileage by computing the airline mileage between the two ends of the local transport facility or local transport channel mileage or special access channel mileage elements.
2.	Determine the airline mileage for the local transport channel mileage or local transport facility charge using the V&H Coordinate method as set forth in NECA Tariff FCC No. 4. Determine the airline mileage for the channel mileage element using the V&H coordinate method.
L.	For FGB, FGC and FGD and switched access services with tandem switched transport, the local transport charges are determined as follows.
1.	Multiply the number of access minutes by the number of airline miles determined in Section 3.1.2K by the Telephone Company's appropriate local transport facility per mile per access minute rate.

3. Ordering of Service

3.1 Ordering, Rating and Billing of Access Services Where More Than One Exchange Telephone Company is Involved

3.1.2	Meet Point Billing
L.	(Continued)
2.	Multiply the product determined in Section 3.1.2L1 by the Telephone Company's billing percentage factor.
3.	Divide the product determined in Section 3.1.2L2 by 100. (The resulting amount is the total local transport facility charge).
4.	Multiply the number of access minutes by the Telephone Company's appropriate local transport termination per minute rate.
5.	Divide the product determined in Section 3.1.2L4 by two. (The resulting amount is the total local transport termination charge).
6.	Add the resulting amounts obtained in Section 3.1.2L3 and Section 3.1.2L5. (This will result in the total local transport charges).
M.	For FGB, FGC and FGD switched access service with direct trunked transport, determine the rate (utilizing both the fixed and per mile local transport channel mileage rate elements) for the airline mileage determined in Section 3.1.2J. Multiply such rate by the Telephone Company's billing percentage factor and divide by 100 to obtain the local transport channel mileage element charges.
N.	The BP factor for the Telephone Company for the service between the two involved offices is listed in NECA Tariff FCC No. 4.

3. Ordering of Service

3.1 Ordering, Rating and Billing of Access Services Where More Than One Exchange Telephone Company is Involved

3.1.2 Meet Point Billing

Exhibit 3.1.2-1
Meet Point Billing

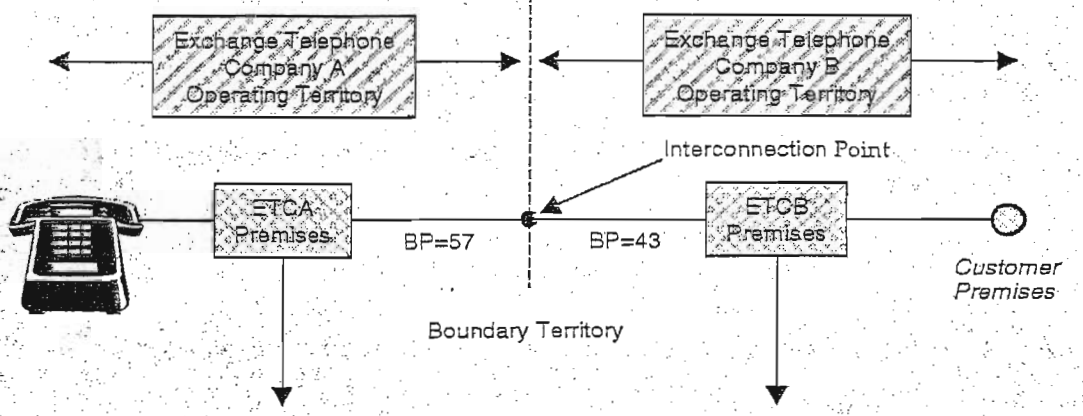

ASSUMPTIONS

Assume FGB, FGC, or FGD is ordered to End Office A; End Office A is in the operating territory of exchange telephone company A; and the premises of the ordering customer is in the operating territory of exchange company B.

4. Issuance, Payment and Crediting of Customer Bills

4.1 Undertaking of the Telephone Company

4.1.1	Billing Convention Methods
A.	The Telephone Company shall bill on a current basis all charges incurred by and credits due to the customer under this tariff attributable to services established or discontinued or provided during the preceding billing period.
B.	The Telephone Company shall bill in advance charges for all services to be provided during the ensuing billing period except for charges associated with service usage and for the federal government which will be billed in arrears.

4.1.2	Late Payment Penalty
A.	If any portion of the payment is received by the Telephone Company after the payment date (refer to Section 4.1.4), or if any portion of the payment is received by the Telephone Company in funds which are not immediately available to the Telephone Company, then a late payment penalty shall be due to the Telephone Company.
B.	The late payment penalty shall be the portion of the payment not received by the payment date times a late factor. The late factor shall be 0.0005 per day for the number of days from the payment date to and including the date that the customer actually makes the payment to the Telephone Company.

4.1.3	Billing Periods
A.	The billing date of a bill for a customer for access service provided under this tariff is referred to as the bill day. The period of service each bill covers is as follows.
1.	The Telephone Company will establish a bill day each month for each customer account.
2.	The bill will cover non usage sensitive service charges for the ensuing billing period for which the bill is rendered, any known unbilled non usage sensitive charges for prior periods and unbilled usage charges for the period after the last bill day through the current bill day. Any known unbilled usage charges for prior periods and any known unbilled adjustments will be applied to this bill.

4.1.4	Payment Date
A.	The payment date of bills rendered to customers for access service provided under this tariff is as follows.
1.	All bills dated as set forth in Section 4.1.3 for service, provided to the customer by the Telephone Company, are due 31 days after the bill day or by the next bill date (i.e., same date in the following month as the bill date), whichever is the shortest interval, except as provided herein.

4. Issuance, Payment and Crediting of Customer Bills
4.1 Undertaking of the Telephone Company

4.1.4	Payment Date
A.	(Continued)
2.	If such payment date would cause payment to be due on a Sunday or on a Legal Holiday which is observed on a Monday, the payment date shall be the first non holiday day following such Sunday or Legal Holiday.
3.	If such payment date falls on a Saturday or on a Legal Holiday which is observed on Tuesday, Wednesday, Thursday or Friday, the payment date shall be the last non-holiday day preceding such Saturday or Legal Holiday.
B.	If payment is not received by the payment date or if payment is not in immediately available funds, a late payment penalty will apply (refer to Section 4.1.2).

4.1.5	Medium of Payment
A.	Bills are payable in immediately available funds.
1.	**Immediately Available Funds** denotes a corporate or personal check drawn on a bank account and funds which are available for use by the receiving party on the same day on which they are received and include US Federal Reserve bank wire transfers, US Federal Reserve notes (paper cash), US coins and US Postal Money Orders.

4.1.6	Customer Deposits
A.	The Telephone Company will, in order to safeguard its interests, require only a customer which has a proven history of late payments to the Telephone Company or does not have established credit except for a customer which is a successor of a company which has established credit and has no history of late payments to the Telephone Company, to make a deposit prior to or at any time after the provision of a service to the customer to be held by the Telephone Company as a guarantee of the payment of rates and charges.
B.	Such deposit may not exceed the actual or estimated rates and charges for the service for a two month period.
C.	The fact that a deposit has been made in no way relieves the customer from complying with the Telephone Company's regulations as to the prompt payment of bills.
D.	At such time as the provision of the service to the customer is terminated, the amount of the deposit will be credited to the customer's account and any credit balance which may remain will be refunded.
E.	At the option of the Telephone Company, such a deposit will be refunded or credited to the customers' account when the customer has established credit or after the customer has established a one year prompt payment record at any time prior to the termination of the provision of the service to the customer.

4. Issuance, Payment and Crediting of Customer Bills

4.1 Undertaking of the Telephone Company

4.1.6	Customer Deposits
F.	In case of a cash deposit, for the period the deposit is held by the Telephone Company, the customer will receive interest at the same percentage rate as that set forth in Section 4.1.2B. Interest will accrue for the number of days from the date the customer deposit is received by the Telephone Company to and including the date such deposit is credited to the customer's account or the date the deposit is refunded by the Telephone Company.
G.	Should a deposit be credited to the customer account, as indicated above, no interest will accrue on the deposit from the date such deposit is credited to the customer's account.

4.1.7	Nonrecurring Charges
A.	At the option of the customer, all NRCs associated with a standard or negotiated interval access order may be billed over a three month period in monthly installments subject to the following.
1.	All NRCs associated with a given access order must be billed in monthly installments.
2.	The total of the NRCs associated with a given access order must be $500.00 or more.
3.	50% of the total NRCs will be billed in the first monthly billing period after the charges are incurred, and 25% of the total NRCs plus a service charge will be billed in each of the following two monthly billing periods. The service charge is a fraction of the total remaining NRCs. The service charge is calculated as follows.
a.	30 times the decimal value set forth in Section 4.1.2B, times the total remaining NRCs equals the service charge.
4.	The customer must request installment billing on or before the application date for a standard or negotiated interval access order. The customer may elect to pay the unbilled charges before the expiration of the installment plan. More than one installment plan may be in effect for the same customer at the same time. If the customer disconnects service before the expiration of the plan period, all unbilled charges plus a service charge, if applicable, will be included in the final bill rendered.
B.	NRCs apply for establishing service following fire, flood or other occurrence, at a different location on the same premises or at a different premises pending reestablishment of service at the original location. NRCs do not apply for the reestablishment of service following a fire, flood or other occurrence attributed to an Act of God provided that:
1.	The service is of the same type as was provided prior to the fire, flood and other occurrence.
2.	The service is for the same customer and the service is at the same location on the same premises.

4. Issuance, Payment and Crediting of Customer Bills
4.1 Undertaking of the Telephone Company

4.1.7	Nonrecurring Charges
B.	(Continued)
3.	The reestablishment of service begins within sixty days after Telephone Company service is available. The sixty day period may be extended a reasonable period if the renovation of the original location on the premises affected is not practical within the allotted time period.

4.1.8	Billing Dispute
A.	In the event that a billing dispute occurs concerning any charges billed to the customer by the Telephone Company the regulations contained in Section 4.1.8 will apply.
B.	The first day of the dispute shall be the date on which the customer furnishes the Telephone Company with the account number under which the bill has been rendered, the date of the bill and the specific items on the bill being disputed.
C.	The date of resolution shall be the date on which the Telephone Company completes its investigation of the dispute, notifies the customer of the disposition and, if the billing dispute is resolved in favor of the customer, applies credit for the correct disputed amount, the disputed amount penalty and/or late payment penalty as appropriate.
D.	If a billing dispute is resolved in favor of the Telephone Company, any payments withheld pending resolution of the dispute shall be subject to the late payment penalty. Further, the customer will not receive credit for the disputed amount or the disputed amount penalty.
E.	If a customer disputes a bill within three months of the payment date and pays the total billed amount on or before the payment date and the billing dispute is resolved in favor of the customer, the customer will receive a credit for a disputed amount penalty from the Telephone Company for the period starting with the date of payment and ending on the date of resolution. The credit for the disputed amount penalty shall be as set forth following.
F.	If a customer disputes a bill within three months of the payment date and pays the total billed amount after the payment date and the billing dispute is resolved in favor of the customer, the customer will receive a credit for a disputed amount penalty from the Telephone Company for the period starting with the date of payment and ending on the date of resolution. The credit for the disputed amount penalty shall be as set forth following. The late payment penalty (refer to Section 4.1.2) applied to the disputed amount resolved in the customer's favor will be credited.

4. Issuance, Payment and Crediting of Customer Bills
4.1 Undertaking of the Telephone Company

4.1.8	Billing Dispute
G.	If a customer disputes a bill within three months of the payment date and does not pay the disputed amount or does not pay the billed amount (i.e., the nondisputed and disputed amount), and the billing dispute is resolved in favor of the customer, the customer will not receive a credit for a disputed amount penalty from the Telephone Company. The late payment penalty (refer to Section 4.1.2A and 4.1.2B) applied to the disputed amount resolved in the customer's favor will be credited.
H.	If a customer disputes a bill after three months from the payment date and pays the total billed amount on or before the dispute date, and the billing dispute is resolved in favor of the customer, the customer will receive a credit for a disputed amount penalty from the Telephone Company for the period starting with the date of dispute and ending on the date of the resolution. The credit for a disputed amount penalty shall be as set forth following. The customer shall not receive a credit for the late payment penalty.
I.	If a customer disputes a bill after three months from the payment date and does not pay the disputed amount or does not pay the billed amount (i.e., the nondisputed amount and disputed amount) and the billing dispute is resolved in favor of the customer, the customer will not receive a credit for a disputed amount penalty from the Telephone Company. However, if the customer pays the disputed amount or the billed amount after the date of dispute and before the date of resolution, the customer will receive a credit for a disputed amount penalty from the Telephone Company for the period starting with the date of payment and ending on the date of resolution. The credit for the disputed amount penalty shall be as set forth following. The customer will receive a credit for the late payment penalty, if applicable, from the Telephone Company.
1.	The late payment penalty credit shall be the disputed amount resolved in the customer's favor times a late payment penalty factor (refer to Section 4.1.2), for the period starting with the date of dispute and ending on the date of payment of the disputed amount or the date of resolution whichever occurs first.
2.	The disputed amount penalty shall be the disputed amount resolved in the customer's favor times a penalty factor. The penalty factor shall be 0.0005 per day for the number of days from the first date to and including the last date of the period involved.

4.1.9	Billing Adjustments and Verification
A.	Adjustments for the quantities of services established or discontinued in any billing period beyond the minimum period set forth for services in other sections of this tariff will be prorated to the number of days or major fraction of days based on a thirty day month. The Telephone Company will, upon request and if available, furnish such detailed information as may reasonably be required for verification of any bill.

4. Issuance, Payment and Crediting of Customer Bills
4.1 Undertaking of the Telephone Company

4.1.10	Computation of Billed Charges
A.	When a rate as set forth in this tariff is shown to more than two decimal places, the charges will be determined using the rate shown. The resulting amount will then be rounded to the nearest penny (i.e., rounded to two decimal places).

4.1.11	Additional Copies of Bills
A.	When more than one copy of a customer bill for services provided under the provisions of this tariff is furnished to the customer, an additional charge applies for each additional copy of the bill as set forth in Section 13.

4.1.12	Meet Point Billing
A.	Where more than one exchange telephone company is involved in the provision of access service, the Telephone Company will bill such access services in accordance with the regulations set forth in Section 3.1.

4. Issuance, Payment and Crediting of Customer Bills

4.2 Credit Allowance Conditions

4.2.1	Service Interruptions
A.	A service is interrupted when it becomes unusable to the customer because of a failure of a facility component used to furnish service under this tariff or in the event that the protective controls applied by the Telephone Company result in the complete loss of service by the customer as described in Bell Atlantic Telephone Companies Tariff FCC No. 11, Section 6.5.1. An interruption period starts when an inoperative service is reported to the Telephone Company and ends when the service is operative.
B.	No credit allowance will be made for:
1.	Interruptions caused by the negligence of the customer.
2.	Interruptions of a service due to the failure of equipment or systems provided by the customer or others.
3.	Interruptions of a service during any period in which the Telephone Company is not afforded access to the premises where the service is terminated.
4.	Interruptions of a service when the customer has released that service to the Telephone Company for maintenance purposes, to make rearrangements, or for the implementation of an order for a change in the service during the time that was negotiated with the customer prior to the release of that service. Thereafter, a credit allowance (set forth further in Section 4.2.1C), will apply.
5.	Periods when the customer elects not to release the service for testing and/or repair and continues to use it on an impaired basis.
6.	Periods of temporary discontinuance as set forth in Section 2.4.5B.
7.	An interruption or a group of interruptions, resulting from a common cause, for amounts of less than one dollar.
C.	In case of an interruption to any service, for which a credit allowance is due (refer to Section 4.2.1B), allowance for the interruption shall be as follows.
1.	For switched access service, other than switched access service entrance facilities and direct trunked transport facilities, no credit shall be allowed for an interruption of less than 24 hours. The customer shall be credited for an interruption of 24 hours or more at the rate of 1/30 of the sum of either any applicable monthly rates, or the assumed minutes of use charge, when applicable for the service involved, for each period of 24 hours or major fraction thereof that the interruption continues.
2.	The credit allowance(s) for an interruption or for a series of interruptions shall not exceed the sum of either any applicable monthly rate, or the assumed minutes of use charge; whichever is applicable for the service involved, for the service interrupted in any one monthly billing period.
3.	For switched access service entrance facilities and direct trunked transport facilities no credit shall be allowed for an interruption of less than 30 minutes.

4. Issuance, Payment and Crediting of Customer Bills
4.2 Credit Allowance Conditions

4.2.1	Service Interruptions
C.	(Continued)
4.	The monthly charges used to determine credit for switched access service entrance facilities and direct trunked transport facilities, shall be the total of all the monthly rate element charges associated with that portion of the service that is inoperative (e.g. If the entrance facility is inoperative, the customer will be credited at the appropriate monthly rate for the entrance facility and any direct trunked transport provided over the inoperative entrance facility).
D.	Should the customer elect to use an alternative service provided by the Telephone Company during the period that a service is interrupted, the customer must pay the tariffed rates and charges for the alternative service used.
E.	In certain instances, the customer may be requested by the Telephone Company to surrender a service for purposes other than maintenance, testing or activity relating to a service order. If the customer consents, a credit allowance will be granted.
1.	The credit allowance will be 1/1440 of the monthly rate for each period of 30 minutes or fraction thereof that the service is surrendered. In no case will the credit allowance exceed the monthly rate for the service surrendered in any one monthly billing period.

5. Carrier Common Line Access Service

5.1 General

Carrier common line access service is billed to each switched access service provided under this tariff in accordance with the regulations as set forth herein and in Section 4.1, and at the rates and charges contained in Section 30.5.

5.1.1	Description
A.	Carrier common line access provides for the use of end users' Telephone Company provided common lines by customers for access to such end users to furnish intrastate communications. Carrier common line access also provides for the use of switched access service terminating in 800 database access line service.
1.	The Telephone Company will provide carrier common line access service to customers in conjunction with switched access service provided in Section 6.
B.	The CCSA STP link termination and STP port, as set forth in Section 6, are not subject to a carrier common line charge.

5.1.2	Limitations
A.	A telephone number is not provided with carrier common line access.
B.	Detail billing is not provided for carrier common line access.
C.	Directory listings are not included in the rates and charges for carrier common line access.
D.	Intercept arrangements are not included in the rates and charges for carrier common line access.
E.	All trunkside connections provided in the same access group will be limited to the same features and operating characteristics.
F.	All lineside connections provided in the same access group will be limited to the same features and operating characteristics.

5. Carrier Common Line Access Service
5.2 Undertaking of the Telephone Company

5.2.1	Scope
A.	Where the customer is provided with switched access service under this tariff, the Telephone Company will provide the use of Telephone Company common lines by a customer for access to end user.
B.	When the customer reports interstate and intrastate use of switched access service, the associated carrier common line access used by the customer for both interstate and intrastate will be apportioned as set forth in Section 5.4.2C.

5. Carrier Common Line Access Service
5.3 Obligations of the Customer

5.3.1	Reselling MTS/MTS Type Service
A.	Where the customer is reselling MTS and/or MTS type service(s) on which the carrier common line access and switched access charges have been assessed, the customer will obtain FGA, FGB or FGD switched access service under this tariff (refer to Section 6) for originating and/or terminating access in the local exchange.
1.	Such access group arrangements whether single trunks or trunk groups will have carrier common line access charges applied.

5.3.2	Customer Facilities
A.	The customer facilities at the premises of the ordering customer shall provide the necessary on hook and off hook supervision.

5. Carrier Common Line Access Service
5.4 Rate Regulations

5.4.1	Application of Rates and Charges
A.	**General**— Except as set forth herein, all switched access service provided to the customer will be subject to carrier common line access charges.
B.	When access to the local exchange is required to provide a customer service (e.g., MTS type, Telex, Data, etc.) that uses resold IC's private line service, switched access service rates and regulations as set forth in Section 6 will apply except when such access to the local exchange is required for the provision of an enhanced service. Carrier common line access rates and charges apply.
C.	The switched access service provided by the Telephone Company includes the switched access service provided for both interstate and intrastate communications. The carrier common line access rates and charges will be billed to each switched access service provided under this tariff in accordance with Section 4.1 and Section 5.4.2.
D.	Where switched access services connect with private line type services at Telephone Company designated WSOs for provision of WATS or WATS type services, switched access service minutes which are carried on that end of the service (i.e., originating minutes for outward WATS and WATS type services) will be assessed carrier common line access per minute charges.

5.4.2	Determination of Charges
A.	When carrier common line access is provided in association with FGA or FGB switched access service in Telephone Company offices that are not equipped for measurement capabilities, assumed average intrastate access minutes will be used to determine carrier common line access charges. The assumed access minutes are as set forth in Section 6.4.4.
B.	When access minutes are used to determine carrier common line access charges, they will be accumulated using call detail recorded by Telephone Company equipment.
1.	The Telephone Company measuring and recording equipment will be associated with end office or local tandem switching equipment and will record originating access minutes and terminating access minutes where answer supervision is received.
2.	The accumulated access minutes will be summed on a line by line basis, by line group or end office, whichever type of account is used by the Telephone Company, for each customer and then rounded to the nearest minute.
C.	When the customer reports interstate and intrastate use of switched access service, the carrier common line access minutes developed by the Telephone Company, will be multiplied by percentages reported by the customer (refer to Section 2.5.10). The result will then be used to determine the carrier common line charges. The charges for the involved customer account will be determined as follows.
1.	The access minutes for all switched access service subject to carrier common line charges will be multiplied by the per minute rate.

5. Carrier Common Line Access Service
5.4 Rate Regulations

5.4.2	Determination of Charges
C.	(Continued)
2.	The terminating switched access per minute charge applies to all non 800 access terminating access minutes of use. The terminating switched access per minute charge also applies to all terminating 800 access minutes of use which terminate on a common line. The number of such minutes will be obtained from reports furnished by the customer (refer to Section 2.5.10).
3.	The terminating 800 database access service per minute charge applies to all 800 terminating usage which terminates in a WAL service as provided from Bell Atlantic Telephone Companies Tariff FCC No. 11. The number of such minutes will be obtained from reports furnished by the customer (refer to Section 2.5.10).
4.	The originating switched access per minute charge applies to all non 800 originating access minutes of use less those originating access minutes of use associated with FGA access services where the off hook supervisory signaling is forwarded by the customer's equipment when the called party answers.
5.	The originating 800 database access specific per minute charge applies to all originating access minutes of use associated with calls placed to 800 numbers. The originating 800 specific access per minute charge also applies to all originating usage which terminates in a WAL service as provided from Bell Atlantic Telephone Companies Tariff FCC No. 11. The number of such minutes will be obtained from reports furnished by the customer (refer to Section 2.5.10).

5.4.3	One Time Credit
A.	The Telephone Company will provide a one time credit based on applying a credit amount to each customer's carrier common line usage from April 15, 1997 through full billing periods beginning October 15, 1997 through November 14, 1997.

6. Switched Access Service
6.1 General

6.1.1	Reference to Tariff Provisions
A.	Switched access service is ordered under the access order provisions set forth in Section 3 and billed at the rates and charges set forth in Section 30. In addition to regulations which are contained within this tariff, other regulations pertinent to these services are specified in Bell Atlantic Telephone Companies Tariff FCC No. 11, Section 6 apply as appropriate (unless otherwise stated in this tariff) for the services specified in Section 6.1.2 of this tariff.

6.1.2	Service Structure
A.	The switched access services provided under this tariff are: originating, terminating, or two way FGA, FGB, FGD and FG2A, and 800 database access.
B.	The rate categories which apply to switched access service are as follows.
1.	Local transport (described in Section 6.2.1)
2.	Local switching (described in Sections 6.2.2 and 6.2.3)
3.	Carrier common line (described in Section 5).
C.	WAL service is a type of special access service that is provided for use with FGB and/or FGD. WAL service connects an end user premises with a WATS or WSO. This service is ordered and provisioned under Bell Atlantic Telephone Companies Tariff FCC No. 11, Section 7.
D.	Local transport, local switching and carrier common line when combined to provide a complete switched access service is as illustrated in Exhibit 6.1.2-1.

6. Switched Access Service
6.1 General

6.1.2 Service Structure

Exhibit 6.1.2-1
Local Transport, Local Switching and Carrier Common Line when Combined to Provide a Complete Switched Access Service

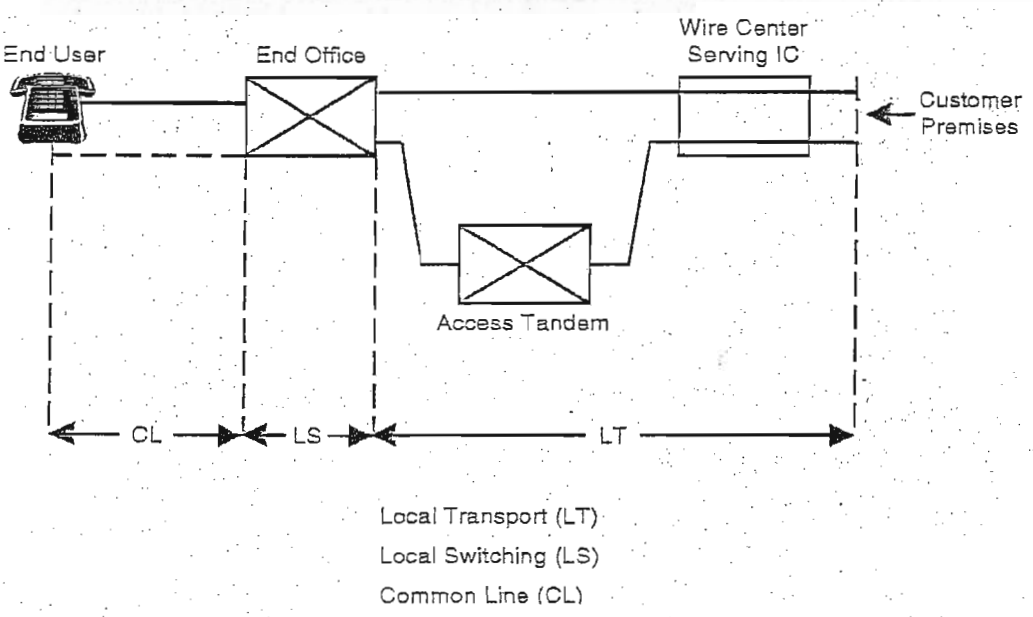

6. Switched Access Service
6.1 General

6.1.3	Manner of Provision
A.	Regulations pertaining to the provision of switched access feature groups provided under this tariff are the same as those set forth in Bell Atlantic Telephone Companies Tariff FCC No. 11, Section 6.2, except for FG2A which is detailed in Section 6.3.2. In addition to those regulations, the following apply.
B.	At the request of the customer, the Telephone Company will provide to the customer the makeup of the facilities and services provided from the customer's premises to the first point of switching. This information will be provided in the form of a design layout report. The design layout report will be provided to the customer at no charge, and will be reissued or updated whenever these facilities are materially changed.
C.	At no additional charge, the Telephone Company will, at the customer's request, cooperatively test, at the time of installation, the following parameters.
1.	Loss
2.	C Message Noise
3.	3 Tone Slope
4.	dc Continuity
5.	Operational Signaling
6.	When the local transport is provided with interface groups 2, 6, 7 and 9 and the local transport termination is two wire (there is a four wire to two wire conversion in local transport), balance parameters (equal level echo path loss) may also be tested.
D.	When CCSA and/or the SS7 signaling option with FGD or FG2A is ordered, network compatibility and other operational tests will be performed cooperatively by the Telephone Company and the customer. These tests will verify the capabilities as set forth in TR–TSV–000905 and, in addition for FG2A, as set forth in GR–1434–CORE and TR–NPL–000145.
E.	Any customer may request that the facilities used to provide switched access service be specially routed as set forth in Section 11.

6. Switched Access Service
6.2 Rate Categories

6.2.1	Local Transport
A.	Local transport provides the transmission facilities between the customer's premises and the end office switch(es) where the customer's traffic is switched to originate or terminate its communications.
B.	Local transport is a two way voice frequency transmission path composed of facilities specified by the customer or, for tandem switched transport, determined by the Telephone Company.
1.	The two way voice frequency transmission path permits the transport of calls in the originating direction (from the end user end office switch to the customer's premises) and in the terminating direction (from the customer's premises to the end office switch), but not simultaneously.
2.	The voice frequency transmission path may be comprised of any form or configuration of plant capable of and typically used in the telecommunications industry for the transmission of voice and associated telephone signals within the frequency bandwidth of approximately 300 to 3000 Hz.
3.	The circuits and equipment used for local transport may be dedicated to a single customer (direct trunked transport), used in common by multiple customers (tandem switched transport) or a combination of the two.
4.	The customer has the option of a 2-wire voice grade, 4-wire voice grade, DS1 or DS3 entrance facility for local transport from the customer designated premises to the serving wire center of such customer designated premises. For collocation, the customer has the option of a DS1 or DS3 entrance facility for local transport from the customer's collocated premises to the serving wire center of such collocated premises.
5.	The customer has the option of voice grade, DS1 or DS3 direct trunked transport from the customer's serving wire center to designated end offices or access tandems.
6.	The local transport rate category provides for DS3 to DS1 or DS1 to voice grade multiplexing optional features.
7.	At the customer's option, multiplexing functions may be performed at the serving wire center of the customer premises, at a terminus, intermediate or super intermediate hub, at end offices or at Telephone Company access tandems. Channel mileage rates and a mid-link NRC will apply if multiplexing functions are performed between two Telephone Company hubs located in different wire centers.
8.	DS1 to voice grade multiplexing is not available at end offices.
C.	The Telephone Company will work cooperatively with the customer in determining the following.
1.	Whether the service is to be directly routed to an end office switch or through an access tandem switch.
2.	Whether the service is to be routed through a traffic operator position system tandem switch.

6. Switched Access Service
6.2 Rate Categories

6.2.4	Local Transport
C.	(Continued)
3.	The directionality of the service.
D.	The local transport mileage for access minutes which originate (i.e., FGD) from or terminate (i.e., FGB and FGD) to a WAL service will be calculated on an airline basis, using the V&H coordinates method as set forth in NECA Tariff FCC No. 4 for wire center interconnection information, between the WSO at which the WAL service terminates and the customer premises serving wire center for the FGB or FGD service provided.
1.	For purposes of determining local transport mileage, distance will be measured from the wire center that normally serves the customer to the end office switch(es). Exceptions to the mileage measurement rules are set forth in Section 6.4.5.
2.	When FGB usage originating from or terminating to a WAL service is transported over a FGB trunk for which assumed minutes of use are billed, the local transport mileage for such usage will be calculated in accordance with the V&H coordinates method.
E.	The local transport rate category is comprised of the following.
1.	**Entrance Facility**— Comprised of a standard channel termination rate for that portion of the voice frequency transmission path from the customer premises to the serving wire center of the customer premises.
a.	The customer must order or have in place an entrance facility from the customer premises to the serving wire center of the customer premises for direct trunked transport or tandem switched transport.
b.	An office channel termination rate will apply in lieu of the standard channel termination for each local transport entrance facility terminated at a customer's collocated premises as referenced in Bell Atlantic Telephone Companies Tariff FCC No. 11. Telephone Company facilities or services will not be provided to connect collocated premises in different serving wire centers.
2.	**Interconnection Charge**— Provides for interconnection with the Telephone Company switched access network.
F.	**Direct Trunked Transport**— The local transport rate category, when provided as direct trunked transport, is comprised of a channel mileage rate which provides for that portion of the voice frequency transmission path from the serving wire center of the customer premises directly to an end office or an access tandem.

6. Switched Access Service
6.2 Rate Categories

6.2.1	Local Transport
G.	The local transport rate category, when provide as tandem switched transport, is comprised of the following.
1.	**Local Transport Termination**— Provides for that portion of the voice frequency transmission path at either the serving wire center of the customer premises or at the access tandem and the end office switch for traffic that is switched at an access tandem. Local transport termination provides for that portion of the voice frequency transmission path at a host end office and an RSS or an RSM.
2.	**Local Transport Facility**— Provides for that portion of the voice frequency transmission path from either the serving wire center of the customer premises or the access tandem to an end office for traffic that is switched at an access tandem. Local transport facility provides for that portion of the voice frequency transmission path from the host end office to an RSS and an RSM.
3.	**Local Transport Tandem Switching**— Provides for the use of the Telephone Company tandem switching facilities. An operator passthrough charge and multiplexer charge will apply as appropriate.
H.	The Telephone Company will provide end users with access to the operators of a customer for operator assisted call completion as desired. If the customer provides operator services for its end users for calls originating from within the LATA and is capable of receiving calls passed through to it in the LATA by the Telephone Company, the customer will be assessed an operator passthrough charge that will include the costs associated with handling the operator services traffic.
I.	CCSA provides for interconnection to the Telephone Company common channel signaling network using dedicated STP links and STP ports.
J.	**Interface Groups**— Descriptions as well as regulations pertaining to interface groups which are applicable to the switched access feature groups, with the exception of FG2A, offered under this tariff are the same as those set forth in Bell Atlantic Telephone Companies Tariff FCC No. 11. FG2A is provided with interface groups as detailed in Exhibits 6.2.1-1 through 6.2.1-4.
K.	**Non-Chargeable Optional Features**— Where transmission facilities and/or parameters permit, and where signaling conversion is required by the customer to meet its signaling capability, the Telephone Company will provide the customer supervisory signaling arrangement for each transmission path, or other optional features, as follows.
1.	**Interface Groups 1 and 2**— DX supervisory signaling, E&M Type 1 supervisory signaling, E&M Type 2 supervisory signaling, or E&M Type 3 supervisory signaling.
2.	**Interface Group 2**— SF supervisory signaling or tandem supervisory signaling.

6. Switched Access Service
6.2 Rate Categories

6.2.1	Local Transport
K.	(Continued)
3.	**Interface Groups 6, 7 and 9**— These interface groups, at the option of the customer, may be provided with individual transmission path SF supervisory signaling where such signaling is available in Telephone Company central offices. Generally such signaling is available only where the entry switch provides an analog, (i.e., non digital), interface to the transport termination and a portion of the facility between the analog entry switch and the customer's premises is analog.
4.	**Customer Specified Entry Switch Receive Level**— Allows the customer to specify the receive transmission level at the first point of switching. The range of transmission levels which may be specified is described in TR–NWT–000334. This is available with interface groups 2, 6, 7 and 9 for FGA and FGB.
5.	**Customer Specification of Local Transport Termination**— Allows the customer to specify, for FGB routed directly to an end office or access tandem, a four wire termination of the local transport at the entry switch in lieu of a Telephone Company selected two wire termination. This is available only when the FGB arrangement is provided with Type B transmission specifications.
6.	**SS7 Signaling**— Provided with FGD or FG2A. These trunks may be provided using interface groups 1, 2, 6 and 9. Premises interface codes 04DS9–1S, 04DS9–15 and 04DS6–44 are available for signaling connections as a function of CCSA level (DS1) of digital transmission.
a.	The SS7 option allows the customer to receive signals for call setup out of band. This option is available with FGD or FG2A. The option is provided with calling party number, charge number, and carrier selection parameter. In addition, carrier identification parameter is available as a chargeable optional feature.
L.	**Chargeable Optional Features**
1.	**CCSA** provides interconnection to the Telephone Company common channel signaling network using a dedicated STP link and a dedicated STP port. The STP link provides the connection from the customer designated premises to the Telephone Company STP. The STP port provides the customer access to the Telephone Company SS7 network. The STP links and the STP port are dedicated to the customer.
a.	Each CCSA STP link provides for two-way digital transmission at a speed of 56 kbps. The connection to the Telephone Company STP can be made from either the customer's SP which requires two 56 kbps circuits or from the customer's STP which requires four 56 kbps circuits. The design requirements for CCSA STP links are described in TR–TSV–000905.
b.	The STP locations are set forth in NECA Tariff FCC No. 4.

6. Switched Access Service
6.2 Rate Categories

6.2.1	Local Transport
L.1.	(Continued)
c.	Where multiple STP pairs are deployed in a LATA, Telephone Company end offices or tandems are interconnected to only one STP pair. The customer must route terminating traffic to the STP pair that serves the end office or tandem switch where the call is terminated. The customer may request that all of its terminating traffic in a LATA be routed to a single STP pair, using the Telephone Company's SS7 signaling network to provide the connection to the other STP pair in the LATA. If available capacity exists within the Telephone Company SS7 signaling network and where technically feasible, the Telephone Company and the customer will mutually agree to the customer's use of a single STP pair in the LATA. In the event that the Telephone Company SS7 signaling network may be impaired as a result of changes in traffic requirements, the customer will then be notified that its use of a single STP pair in the LATA is no longer permitted and that it must order CCSA links to each STP pair in the LATA.

6. Switched Access Service
6.3 Description of Switched Access Services

6.3.2	Feature Group 2A (FG2A)
D.	**Terminating Access—** FG2A switching, when used in the terminating direction, may be used to access valid NXXs in the LATA served by the end offices subtending the access tandems. Calls in the terminating direction will not be completed to local operator service (0– and 0+), directory assistance service, 911 emergency reporting service, exchange telephone repair, time or weather announcement services, 800 database and 900 services and community information services of an information service provider.
1.	FG2A may not be switched in the terminating direction to switched access FGB.
2.	FG2A intraLATA usage will not be switched by the Telephone Company in the terminating direction to FGD.
E.	**Originating Access—** At the option of the wireless carrier, a group of seven digit numbers assigned by the Telephone Company is provided for LATA access to FG2A in the originating direction.
F.	**Signaling—** FG2A provides trunk side switching through the use of access tandem switch trunk equipment. The switch trunk equipment is provided with multifrequency address signaling. FG2A may be provided, at the customer's option, with multifrequency address signaling in both the originating and terminating directions as specified in technical reference TR–NPL–000145 or common channel signaling utilizing the SS7 protocol.
1.	With common channel signaling, up to 12 digits of the called party number dialed by the customer's end user using dual tone multifrequency or dial pulse address signals will be provided by Telephone Company equipment to the customer's designated premises via a CCSA connection. The SS7 signaling option requires the customer to order CCSA links (refer to Section 6.2.1).
G.	**Intercept Announcement—** When all FG2A switching arrangements are discontinued in a LATA, an intercept announcement is provided for a limited period of time. This arrangement provides an announcement that the service associated with the numbers dialed has been disconnected.

6.3.3	800 Data Base Access Service
A.	**General—** For purposes of administering the rules and regulations set forth in this tariff regarding the provisions of 800 database access service, except where otherwise specified, the term 800 database access service shall include any of the following NPAs as they become available to the industry.
1.	800
2.	822
3.	833
4.	844

6. Switched Access Service
6.3 Description of Switched Access Services

6.3.3	800 Data Base Access Service
A.	(Continued)
5.	855
6.	866
7.	877
8.	888
B.	800 database access service is a LATA-wide offering utilizing originating trunk side switched access service. The service provides for the forwarding of end user dialed 800+NXX–XXXX calls to a Telephone Company switching point which will initiate a query to the database to perform the carrier identification function. The customer has the option of having the dialed 800 number (i.e., 800–NXX–XXXX) or if the 800 to POTS number translation feature is specified, a translated ten digit POTS number (i.e., NPA–NXX–XXXX) is delivered to the customer premises switch capable of performing the carrier identification function. Based on the NXX, the call is forwarded to the appropriate IC.
1.	An 800 carrier identification charge (described in Section 6.6.2), applies to customers who obtain 800 database access service.
C.	No access code is required for 800 database access service. When a 1+800+NXX–XXXX call is originated by an end user, the Telephone Company will perform the carrier identification function based on the dialed digits to determine the IC location to which the call is to be routed. The carrier identification function will be available at suitably equipped end offices or access tandem switches. If the call originates from an end office switch not equipped to provide the carrier identification function, the call will be routed to the nearest office at which the function is available. Once carrier identification has been established, the call will be routed to the IC. Calls originating from an end office to which the IC has not ordered 800 database access service, will not be completed.
D.	The provision of 800 database access service requires direct access by the customer or other authorized party, to the 800 SMS.
E.	The manner in which 800 database access service is provisioned is dependent on the status of the end office from which the service is provided, and/or the status of the customer (i.e., MTS/WATS provider or MTS/WATS type provider). 800 database access service is provisioned as FGD.
1.	Unless prohibited by technical limitations (e.g., different dialing plans), the IC's 800 database access service traffic may, at the option of the IC, be combined in the same trunk group arrangement with the IC's non-800 access service traffic. When required by technical limitations, a separate trunk group must be established for 800 database access service.

6. Switched Access Service
6.3 Description of Switched Access Services

6.3.3	800 Data Base Access Service
F.	800 traffic carried over direct end office routed trunks is available only at end offices equipped with 800 access SSP functionality. 888 traffic carried over direct end office routed trunks is available only at end offices equipped with 888 access SSP functionality. All such traffic originating from end offices not equipped with the appropriate SSP function must be routed via an access tandem at which the function is available and the 800 access service must be ordered accordingly. SSP locations are identified in the NECA Tariff FCC No. 4.
G.	Optional Features
1.	**Call Handling and Destination Feature**— Allows the IC to create call processing logic for 800–NXX–XXXX dialed calls. In this manner the 800 database access service can be customized to meet individual requirements. The feature may be used in combination with one or more routing options based upon IC specification and technical switch limitations. The IC may segment the 800 calls based on the following options to choose different terminating destinations and/or multiple carriers.
a.	NPA/NXX or specific telephone number of the calling party based on the ANI associated with the call or based on the specific telephone number of the calling party (the availability of this feature is subject to the Telephone Company's ability to obtain full ten digit ANI of the calling party).
b.	Time of Day
c.	Day of Week
d.	Specific days of the year (e.g., December 25)
e.	Percentage of traffic (in 1% increments)
f.	**800 to POTS Translation** which allows ICs to designate a ten digit POTS telephone number to be translated from a specific 800 number to be delivered to the ICs premises. If the POTS number translation feature is ordered, the IC will be unable to determine that such calls originated as 800 dialed calls unless the IC also orders the ANI optional feature.

6. Switched Access Service
6.4 Responsibility of the Telephone Company

6.4.1	General
A.	In addition to the obligations in Section 2, the Telephone Company has certain other obligations pertaining only to the provision of switched access service. Those regulations are the same as those set forth in Bell Atlantic Telephone Companies Tariff FCC No. 11, Section 6.5.

6.4.2	Transmission Specifications
A.	The available transmission specifications for switched access service arrangements offered under this tariff are the same as those stated in Bell Atlantic Telephone Companies Tariff FCC No. 11, Section 6.4.
B.	Data transmission parameters are not provided with FG2A.
C.	The transmission specifications for FG2A are in TR–EOP–000352.
D.	Transmission specifications for CCSA signaling connections are set forth in TR–TSV–000905.
E.	FG2A is provided with Type B transmission specification only. Type B is provided with interface group 2.

6.4.3	Excessive Trunk Group Blocking
A.	Regulations for network blocking for FGD are the same as those set forth in Bell Atlantic Telephone Companies Tariff FCC No. 11, Section 6.7.7.

6.4.4	Measuring Access Minutes
A.	Regulations for measuring access minutes for originating, terminating or two way FGA, FGB, FGD and FG2A are the same as those set forth in Bell Atlantic Telephone Companies Tariff FCC No. 11, Section 6.7.6 except as detailed in Section 6.4.4B.
B.	**Feature Group 2A Usage Measurement**
1.	For originating calls over FG2A, except for FG2A with the SS7 signaling option, usage measurement begins when the originating FG2A entry switch receives answer supervision from the customer's point of termination, indicating the called party has answered.
2.	The measurement of originating call usage over FG2A ends when the originating FG2A entry switch receives disconnect supervision from either the originating end user's end office, indicating the originating end user has disconnected or the customer's point of termination, whichever is recognized first by the entry switch.
3.	For terminating calls over FG2A, the measurement of access minutes begins when the terminating FG2A entry switch receives answer supervision from the terminating end user's end office, indicating the terminating end user has answered.

6. Switched Access Service
6.4 Responsibility of the Telephone Company

6.4.4	Measuring Access Minutes
B.	(Continued)
4.	The measurement of terminating call usage over FG2A ends when the terminating FG2A entry switch receives disconnect supervision from either the terminating end user's end office, indicating the terminating end user has disconnected, or the customer's point of termination, whichever is recognized first by the entry switch.
5.	For originating calls over FGD with the SS7 signaling option, usage measurement for direct trunks begins when the FGD entry switch sends an initial address message. For originating calls over FGD or FG2A with the SS7 signaling option, usage measurement for tandem trunks begins when the FGD or FG2A entry switch receives an exit message.

6.4.5	Determining Local Transport Facility Mileage
A.	Regulations pertaining to mileage measurement and exceptions to the mileage measurement rules are the same as those set forth in Bell Atlantic Telephone Companies Tariff FCC No. 11, Section 6.7.11.

6.4.6	Determination of Number of Transmission Paths
A.	Regulations pertaining to determination of number of transmission paths are the same as those set forth in Bell Atlantic Telephone Companies Tariff FCC No. 11, Section 6.6.2.

6. Switched Access Service
6.5 Responsibility of The Customer

6.5.1	General
A.	In addition to the customer obligations set forth in Section 2, the customer has certain specific obligations pertaining to the use of the switched access service arrangements offered under this tariff as follows.

6.5.2	Facility Requirements
A.	When ordering switched access service, the customer must, at a minimum, specify the local transport entrance facility, either existing or new, to be used and whether direct trunked transport or tandem switched transport is to be furnished. When direct trunked transport is to be furnished, the customer must also specify the direct trunked transport to be used, either existing or new.

6.5.3	Report Requirements
A.	Customers are responsible for providing the following reports or notification to the Telephone Company, when applicable.
1.	**Jurisdictional Reports**— Refer to Section 2.5.10.
2.	**Usage Data–Meet Point Billing**— Refer to Section 3.1.1A.
3.	**Code Screening Reports**— When a customer orders service class routing it will report the number of trunks and/or the appropriate codes to be instituted in each end office or access tandem switch, for each of the arrangements ordered.
4.	**Trunk Group Measurement Reports**— With the agreement of the customer, trunk group data in the form of usage in CCS, peg count and overflow for its end of all access trunk groups, where technologically feasible, will be made available to the Telephone Company. These data will be used to monitor trunk group utilization and service performance and will be based on previously arranged intervals and format.

6.5.4	Supervisory Signaling
A.	The customer's facilities will provide the necessary on hook, off hook, answer and disconnect supervision.

6.5.5	Design of Switched Access Services
A.	When a customer orders switched access service on a per trunk basis, the customer will take reasonable steps to assure that sufficient access services have been ordered to handle its traffic.

6. Switched Access Service
6.6 Rate Regulations

6.6.1	General
A.	The types of rates and charges that apply to switched access service are monthly rates, usage rates and NRCs.
B.	Rates and charges for switched access service provided under this tariff apply to originating, terminating and two way FGB, FGD, FG2A and 800 database access service.

6.6.2	Monthly Rates
A.	Monthly rates are flat recurring rates that apply each month or fraction thereof that an entrance facility, a direct trunked transport switched access service, chargeable optional feature or specific rate elements are provided. For billing purposes, each month is considered to have 30 days.

6.6.3	Usage Rates
A.	Usage rates apply only when a specific rate element is used. They are applied on a per access minute basis or a per call basis. Usage rates are accumulated over a monthly period. Usage rates applied on a per access minute basis are applied differently to the various rate elements as set forth in Section 6.6.2.

6.6.4	Nonrecurring Charges
A.	NRCs are one time charges that apply for a specific work activity (i.e., installation or change to an existing service). The types of NRCs that apply for switched access service are as described herein.
B.	**Installation of Service**— Local transport and local switching NRCs apply to each switched access service installed.
1.	**Switched Access Service Ordered on a Per Line or Trunk Basis**— The local switching NRC is applied per line or trunk.
2.	**Switched Access Service Ordered on a BHMC Basis**— The local switching NRC is also applied on a per trunk basis but the charge applies only when the capacity ordered requires the installation of an additional trunk(s).
3.	**CCSA STP Links**— The NRC is applied per link connection.
4.	NRCs will apply for the initial installation of entrance facility and, if applicable, the initial installation of channel mileage mid-link and multiplexer. For each entrance facility of the same type (i.e. voice grade, DS1, DS3) ordered at the same time, for the same date and from the same customer premises to the same serving wire center, the channel termination NRC will apply on a first and additional basis.

6. Switched Access Service
6.6 Rate Regulations

6.6.4	Nonrecurring Charges
C.	**Installation of Optional Features or BSEs—** If a separate NRC applies for the installation of an optional feature, the charge applies whether the feature is installed coincident with the initial installation of service or at any time subsequent to the initial installation of service. For optional features without separate NRCs, the local switching NRC will apply when the optional features are ordered subsequent to the installation.
D.	**Service Rearrangements—** Changes to existing services (installed) which do not result in either a change in the minimum period requirements as set forth in Section 2.2.5 or a change in the physical location of the POT at the customer's premises or the customer's end user's premises are considered service rearrangements. Service rearrangements which are considered to result in a change in the minimum service period are as set forth in Bell Atlantic Telephone Companies Tariff FCC No. 11, Section 5. Changes which result in the establishment of new minimum period obligations are treated as discontinuances of existing service, and installations of new service. Changes in the physical location of the POT are treated as moves. The charge to the customer for the service rearrangement is dependent on whether the change is administrative only or involved an actual physical change to the service.
1.	The following administrative changes will be made without charge to the customer.
a.	Change of customer name
b.	Change of customer or customer's end user premises address when the change of address is not a result of a physical relocation of equipment
c.	Change in billing data [name, address or contact name or telephone number]
d.	Change of agency authorization
e.	Change of customer circuit identification
f.	Change of billing account number
g.	Change of customer test line number
h.	Change of customer or customer's end user contact name or telephone number
i.	Change of jurisdiction
j.	Change in billing option within the same access tandem from tandem switched transport to direct trunked transport or vice versa.
2.	If, due to network considerations of the Telephone Company, it was impossible to combine 800 database access services traffic with a customer's other trunkside switched access services, no charge shall be applied to combine the trunk groups when it becomes possible.

6. Switched Access Service
6.6 Rate Regulations

6.6.4	Nonrecurring Charges
D.	(Continued)
3.	To redirect traffic from direct routed to tandem routed for 800 database service, where the service is initially available only at the tandem will not be assessed an NRC. In addition, when 800 database service becomes available at end offices subtending a tandem to which customers have redirected their 800 traffic, customers will be allowed to rearrange their 800 traffic from tandem routed to direct routed at no charge provided the same customer premises is maintained.
E.	**Trunk Rearrangements and Rearrangements of Switched Access Services onto an Existing Switched Access DS3 or DS1 Facility**—The regulations contained in Section 6.6.4E will apply for six months from August 30, 1996 for rerouting of trunks from end office to access tandem or from access tandem to end office. In addition, customers who wish to rearrange switched access services from one switched access facility onto a different existing or new switched access facility will be subject to the following regulations. Installation of new switched access facilities for rearrangements will not be subject to an NRC. The Telephone Company guarantees to provide these rearrangements on orders due dated no later than six months from August 30, 1996. These regulations apply to switched access services only and will not include special access services provided on a shared use facility as set forth in Bell Atlantic Telephone Companies Tariff FCC No. 11.
1.	**Trunk Rearrangements**—If the change involves rearrangement of a customer's trunkside switched access service arrangement from direct routed to tandem routed, or from tandem routed to direct routed, a charge shall apply for the customer requested rearrangement, provided all the following conditions are met.
a.	The same customer premises is maintained.
b.	The direct routed end office must subtend the tandem which service is being rearranged to or from.
c.	The Telephone Company will work cooperatively with the customer to determine the equivalent basis for the trunk rearrangements based on industry accepted engineering standards.
d.	The orders to connect at the tandem or end office must be placed at the same time as the orders to disconnect from the end office or tandem. The due date for the disconnect may not be more than 90 days after the due date for the connect order.
2.	Rearrangements of a switched access services onto an existing switched access DS3 or DS1 facility will be subject to the rearrangement charge provided the same customer designated premises and end points of the underlying switched access services remain the same.
F.	**All Other Service Rearrangements** will be charged for as follows.
1.	If the change involves the addition of an optional feature which has a separate NRC, that NRC will apply.

6. Switched Access Service
6.6 Rate Regulations

6.6.4	Nonrecurring Charges
F.	(Continued)
2.	If the change involves rearrangement of a customer's FGD access service from direct routed to tandem routed, no charge shall apply for the customer requested rearrangement as long as the following conditions are met.
a.	Tandem routed access was not available to the end office at the time the end office was converted to an equal access office.
b.	The customer was providing service in the relevant area prior to the availability of tandem routed access.
c.	The customer requested the rearrangement of its trunks from direct routed access to tandem routed access within six months of the first availability of tandem routed access in that area.
d.	The customer orders, as tandem routed, the equivalent capacity to replace the direct routed trunks.
3.	If the change involves the rearrangement of existing switched access services from a digital interface group to another capable of a higher bit rate), a digital-to-digital rearrangement charge will apply per interface group with the lower bit rate capability. The charge is the same as that set forth in Bell Atlantic Telephone Companies Tariff FCC No. 11. No charge applies to the individual switched services provided within the interface group unless the customer changes the service type or changes only a portion of the individual services from one interface group to another, in which case, the appropriate NRC for each change will apply.
4.	For all other changes, including the addition of, or modifications to, optional features without separate NRCs the local switching NRC will apply. When an optional feature is not required on each transmission path, but rather on an entire transmission path group, an end office or an access tandem switch, only one such charge will apply (i.e., it will not apply per transmission path).
5.	If the change involves a modification to FGD to include the initial provision of 800 database access service in addition to non 800 access service traffic, the local switching installation NRC will apply for service rearrangements on the existing trunks.
6.	If the change involves the conversion of existing FGD or FG2A services with multi-frequency address signaling to FGD with the SS7 signaling option, a rearrangement charge will apply for the first trunk converted and an additional trunk rearrangement charge for each additional trunk ordered and converted at the same time.
7.	If the change involves a change of point code on FGD or FG2A with the SS7 signaling option, a rearrangement charge will apply on a first and additional basis for all orders placed at the same time, between the same two points and for the same due date.

6. Switched Access Service
6.6 Rate Regulations

6.6.4	Nonrecurring Charges
G.	**Moves**
1.	A move involves a change in the physical location of one of the following.
a.	The POT at the customer's or the customer's end user's premises.
b.	The customer's premises.
2.	The charges for the move are dependent on whether the move is to a new location within the same building or to a different building.
a.	**Moves Within the Same Building**— When the move is to a new location within the same building, the charge for the move will be the local switching NRC for the capacity affected. There will be no change in the minimum period requirements.
b.	**Moves to a Different Building** will be treated as a discontinuance and start of service and all associated NRCs will apply. New minimum period requirements will also be established for the new service. The customer will also remain responsible for satisfying all outstanding minimum period charges for the discontinued service.
H.	**Upgrades**— When a customer upgrades a FGA or FGB service to a FGD service, the NRCs will not apply if the following conditions are met.
1.	The same customer premises is maintained.
2.	The orders for the disconnect of the FGA or FGB service and the start of the FGD service are placed with the Telephone Company at the same time.
3.	The customer requests the same effective date for both the disconnect of service and start of service orders.

6. Switched Access Service
6.7 Application of Rates and Charges

6.7.1	General
A.	Local transport termination, local transport facility, tandem switching, interconnection charge and local switching rates are applied to all minutes of use measured as specified in Section 6.4.4.
B.	As specified in the PUC's Order No. 20,077, switched access originating and/or terminating charges apply to all intrastate messages which make use of switched access subject to this tariff.

6.7.2	CCSA Rates
A.	CCSA rates are applied as detailed in Bell Atlantic Telephone Companies Tariff FCC No. 11, Section 6.1.3.

6.7.3	800 Database Access Service Carrier Identification Charge
A.	In addition to the rates and charges associated with the rate categories described in Section 6.2 which are applicable to all switched access service, the 800 database access service carrier identification charge, applies for the identification of the appropriate customer for 800 database access service. The charge is assessed to the IC on a per query basis.

6.7.4	Local Transport Rates
A.	Rate regulations for DS3 switched access entrance facilities are specified in Bell Atlantic Telephone Companies Tariff FCC No. 11, Section 6.7.1. For all other switched access entrance facilities, the rate applies on a recurring monthly basis for the capacity of the entrance facility (i.e., DS1, VG) ordered.
B.	The local transport termination rate is applied per minute of use.
C.	The local transport facility rate is applied per mile, per minute of use. When the local transport facility mileage is zero (i.e., the end office switch or WSO, as appropriate, and the customer's serving wire center are collocated), the local transport facility rate does not apply.
D.	The tandem switching rate is applied per minute of use.
E.	The interconnection charge is applied per minute of use.
F.	For direct trunked transport, the channel mileage applies on a fixed and per mile monthly basis. When the channel mileage is zero (i.e., the end office switch or WSO, as appropriate, and the customer's serving wire center are located in the same building) the channel mileage rates do not apply.

6. Switched Access Service
6.7 Application of Rates and Charges

6.7.4	Local Transport Rates
G.	When direct trunked transport is provided to an end office which is a host office, in addition to the appropriate channel mileage monthly rate, the customer will be billed the local transport termination rate on a per minute of use basis and the local transport facility rate on a per mile per minute basis for the transport of the call to or from a RSS or a RSM. The mileage for the local transport facility rate element will be measured from the host office to the RSS or RSM.
H.	For direct trunked transport provided to an access tandem, the channel mileage applies on a fixed and per mile basis between the serving wire center and access tandem. The per mile per minute local transport facility and the per minute local transport termination rates apply for the transport from the access tandem to the end office. The per minute tandem switching rate applies to all minutes of use switched at the access tandem.
I.	For tandem switched transport, the local transport termination rate, the tandem switching rate and the interconnection charge apply per access minute. The local transport facility rate applies per mile per access minute.
J.	When tandem switched transport is provided to an end office which is a host office, in addition to the rates set forth in Section 6.7.4E, the customer will be billed the local transport termination rate per minute of use and the local transport facility rate per mile per minute for the transport of the call to or from a RSS or RSM.
K.	For FGA services when the off-hook supervisory signaling is forwarded by the customer's equipment when the called party answers, the local transport termination rate per minute of use and the local transport facility rate per mile per minute will apply for the transport of the call from the dialtone office to the end office to which the traffic terminates or from which the traffic originates. The mileage for the local transport facility will be measured from the dialtone office to the end office.

7. Reserved for Future Use

8. Reserved for Future Use

9. Reserved for Future Use

10. Reserved for Future Use

11. Special Facilities Routing of Access Services

11.1 General

11.1.1	Description
A.	The services provided under this tariff are provided over such routes and facilities as the Telephone Company may elect. Special facilities routing is involved when, in order to comply with requirements specified by the customer, the Telephone Company provides switched access service in a manner which includes one or more of the following.
1.	**Diversity**—Two or more services must be provided over not more than two different physical routes.
2.	**Avoidance**—A service must be provided on a route which avoids specified geographic locations.
3.	**Cable Only Facilities**—Certain services are provided on cable only facilities to meet the particular needs of a customer. Service is provided subject to the availability of cable only facilities. In the event of service failure, restoration will be made through the use of any available facilities as selected by the Telephone Company.

11.1.2	Manner of Provision
A.	Avoidance, diversity and cable only facilities are available on switched access service (refer to Section 6).
B.	In order to avoid the compromise of special routing information, the Telephone Company will provide the required routing information for each specially routed service to only the ordering customer. If requested by the customer, this information will be provided when service is installed and prior to any subsequent changes in routing.
C.	The offering of special facilities routing of access services contemplates the use of existing facilities.

11.1.3	Application of Rates and Charges
A.	The rates and charges for special facilities routing of Access services set forth in Section 31 are in addition to all other rates and charges that may be applicable for services provided under other sections of this tariff. The rates and charges for administration and any other specific items of cost directly attributable to the provision of this service shall be filed in Section 31 of this tariff.

12. Reserved for Future Use

13. Additional Engineering, Labor and Miscellaneous Services
13.1 Regulations

13.1.1	General	
A.	Regulations and charges for additional engineering, additional labor and miscellaneous services applicable to switched access services provided under the regulations and rates of this tariff are the same as those set forth in Bell Atlantic Telephone Companies Tariff FCC No. 11, Section 13, with the exception of the following:	(C)
1.	Those portions of Section 13 relating to customer notification, the equal access balloting process, the allocation process, and IC customer lists provisions for presubscription.	(T)
2.	Rates for 1+ Coin Rating Service which are contained in Section 30.13.1 of this tariff.	(N)

14. IntraLATA Presubscription (ILP) Services

14.1 IntraLATA Presubscription

14.1.1	Description
A.	ILP is an arrangement whereby an exchange service customer of the Telephone Company designates either the Telephone Company or another carrier as its presubscribed interexchange carrier (ILP PIC) for calls made from the customer's exchange access line, without the customer having to dial an access code. Calls which qualify for ILP are intrastate intraLATA toll calls as defined in NHPUC No. 83.

14. IntraLATA Presubscription (ILP) Services
14.2 Primary Interexchange Carrier (PIC) Verification

14.2.1	Description
A.	PIC verification enables an IC to obtain verification of their end user's PIC selection in a Telephone Company switch. The IC must provide the telephone number to the Telephone Company either verbally or by the PIC verification automated interface using appropriate system specifications as determined by the Telephone Company. PIC verification service will be provided from suitably equipped wire centers as specified in the NECA Tariff FCC No. 4.

14. IntraLATA Presubscription (ILP) Services
14.3 Application of Rates and Charges

14.3.1	IntraLATA Presubscription
A.	An ILP PIC NRC applies per change for each telephone exchange service line or trunk.
1.	For 90 days immediately following the date of implementation, customers may make one ILP PIC change without charge.
2.	The ILP PIC charge does not apply for new service customers selecting an ILP PIC at the time they place an order with the Telephone Company for telephone exchange service.
3.	A new customer who did not select an ILP PIC at the time service was being established and as a result was provided access code dialing as an alternative, has 60 days to request a change from access code dialing to the Telephone Company or to another carrier, and no ILP PIC charge will apply. Customers requesting a change after 60 days will incur the ILP PIC charge.
4.	The ILP PIC charge applies for an intralata PIC change on a line. The ILP PIC charge will be waived if an interlata PIC change is also being requested on that line at the same time, and on the same service order, as the intralata PIC change request.
B.	**Service Charges—** The applicable NHPUC No. 83 NRC (service order) applies to reestablish a customer's OCP service.
1.	The charge does not apply when the customer's request is received within 90 days of the date upon which the customer's ILP PIC is changed from the Telephone Company.
C.	**Unauthorized ILP PIC Change/Restoral**
1.	If a customer denies authorizing a change in ILP as submitted by an IC, the customer will be credited the previously billed ILP PIC NRC, and the ILP PIC NRC will be waived for restoring the customer to its previous ILP PIC.
2.	The ILP PIC NRC will be assessed, as applicable, to an IC as set forth following when a customer denies authorizing the change in ILP as submitted by the IC (refer to Section 14.3.1A4).
a.	One ILP PIC NRC is assessed to the alleged unauthorized IC to recover the disputed ILP PIC NRC previously billed to the customer.
b.	One ILP PIC NRC is assessed to the alleged unauthorized IC to restore the customer to its previous ILP PIC.
3.	In accordance with the FCC's slamming liability rules in CC Docket 94–129, if an alleged unauthorized IC is ultimately exonerated of liability, the IC is entitled to receive full payment from the customer for all services provided. In such situations, any ILP PIC NRC assessed against the IC by the Telephone Company is subject to rebilling to the customer by the alleged unauthorized IC.

14. IntraLATA Presubscription (ILP) Services
14.3 Application of Rates and Charges

14.3.2	PIC Verification Service
A.	A separate NRC will apply for each successful PIC verification made on either a verbal or automated interface basis.

14.3.3	Intrastate Equal Access Cost Recovery
A.	The intrastate equal access cost recovery monthly charge applies per originating minute of use in order for the Telephone Company to recover the cost of implementing ILP PIC intrastate equal access capability. The monthly charge will apply for 24 months from the date of implementation. A true-up adjustment will be calculated and either billed or remitted to the ILP carrier at the end of the 24 months.

14.3.4	ILP PIC Change Charge Billing Options
A.	**Direct Billing Option**— This option is available when an IC initiates an ILP PIC change order through the CARE interface by either paper, magnetic tape, network data mover or by on-line electronic interface using system specifications determined by the Telephone Company. The IC can designate direct billing on any ILP PIC change orders it chooses by specifying the ILP PIC change charge indicator in position 405. The NRC for a change in presubscription will then be assessed to the IC, instead of the end user.
1.	Lines equipped with selective access blocking are not eligible for this option.
2.	Direct billing is not available for a change in ILP PIC from other carriers on orders placed via the Telephone Company's residence, business or equal access service centers.
3.	Direct billing may also be utilized, at the Telephone Company's discretion, for orders placed to obtain end user service from the Telephone Company.
4.	Direct billing cannot be specified on an order for a change in presubscription which is normally provided at no charge to the end user.
B.	**Reverse Billing Option**— This option is available to ICs for end user-initiated ILP PIC change orders placed at the Telephone Company's residence, business or equal access service centers. The NRCs for all of the IC's end user-initiated ILP PIC change orders placed at the Telephone Company's residence, business or equal access service centers will then be assessed to the IC instead of the end users.
1.	The IC must notify the Telephone Company in writing of its election to establish or cancel the reverse billing option. Establishment or cancellation will be effective within ten business days from the date the Telephone Company receives written notification and must be in effect for a minimum of six months.

15. Operating Territory
15.1 Locations

The operating territory of the Telephone Company for the State of New Hampshire is comprised of the locations defined by the names of rate centers which are contained in Section 15.1.1.

15.1.1	Rate Centers
A.	Alstead, Ashland
B.	Barrington, Bartlett, Bedford, Belmont, Berlin, Bethlehem, Bristol
C.	Campton, Canaan, Candia, Canterbury, Center Harbor, Center Ossipee, Center Sandwich, Charlestown, Claremont, Colebrook, Concord, Conway
D.	Danbury, Deerfield, Derry, Dover, Dublin, Durham
E.	Enfield, Epping, Epsom, Errol, Exeter
F.	Farmington, Fitzwilliam, Franconia, Franklin
G.	Goffstown, Gorham, Greenfield, Greenville, Groveton
H.	Hampstead, Hampton, Hancock, Hanover, Harrisville, Hinsdale
I.	
J.	Jackson, Jaffrey, Jefferson
K.	Keene, Kingston
L.	Laconia, Lancaster, Lebanon, Lisbon, Littleton, Lyme
M.	Madison, Manchester, Marlborough, Marlow, Meredith, Merrimack, Milan, Milford, Milton, Milton Mills, Monroe
N.	Nashua, New Boston, New Market, Newport, N. Conway, N. Stratford, N. Walpole, Northwood, N. Woodstock
O.	Orford
P.	Pelham, Penacook, Peterborough, Piermont, Pike, Pittsburg, Pittsfield, Plainfield, Plaistow, Plymouth, Portsmouth
Q.	
R.	Raymond, Rindge, Rochester, Rumney, Rye Beach
S.	Salem, Sanbornville, Seabrook, Somersworth, S. Hampton, Spofford, Sullivan, Sunapee, Suncook
T.	Tamworth, Tilton, Troy, Twin Mountain
U.	
V.	
W.	Walpole, Warren, W. Chesterfield, W. Lebanon, Westmoreland, W. Stewartstown, Whitefield, Winchester, Wolfeboro, Woodsville

16. Reserved for Future Use

17. Reserved for Future Use

18. Reserved for Future Use

19. Reserved for Future Use

20. Reserved for Future Use

21. Reserved for Future Use

22. Reserved for Future Use

23. Reserved for Future Use

24. Reserved for Future Use

25. Reserved for Future Use

26. Reserved for Future Use

27. Reserved for Future Use

28. Reserved for Future Use

29. Reserved for Future Use

30. Rates and Charges
30.1 Tariff Information

There are no rates and charges contained within this section.

30. Rates and Charges
30.2 General Regulations

There are no rates and charges contained within this section.

30. Rates and Charges
30.3 Ordering of Service

Refer to Bell Atlantic Telephone Companies Tariff FCC No. 11, Section 31.5.

30. Rates and Charges
30.4 Issuance, Payment and Crediting of Customer Bills

There are no rates and charges contained within this section.

30. Rates and Charges
30.5 Carrier Common Line Access Service

30.5.1 Carrier Common Line				
ID	Service Category	Rate Element	Rate	USOC
	Switched Access Service	Terminating - Per access minute	0.026494	
		Originating - Per access minute	0.026494	
		One Time Credit - Terminating - Per access minute	0.001593	
		One Time Credit - Originating - Per access minute	0.001593	
	800 Database Access Service	Terminating - Per access minute	0.026494	
		Originating - Per access minute	0.026494	
		One Time Credit - Terminating - Per access minute	0.001593	
		One Time Credit - Originating - Per access minute	0.001593	

30. Rates and Charges
30.6 Switched Access

30.6.1 Entrance Facility

ID	Service Category	Rate Element	Rate	USOC	
	Standard Channel Termination	VG 2W - Monthly	36.14	EFG2X	
		VG 2W - First Channel - NRC	263.85	EFG2X	
		VG 2W - Additional Channels - NRC	179.85	EFG2X	
		VG 4W - Monthly	59.00	EFG4X	
		VG 4W - First Channel - NRC	375.68	EFG4X	
		VG 4W - Additional Channels - NRC	251.11	EFG4X	
		DS1 - Monthly	221.48	EFGDX	
		DS1 - First Channel - NRC	618.09	EFGDX	
		DS1 - Additional Channels - NRC	353.52	EFGDX	
		DS3 - Electrical - Monthly	1,893.00	TYFAX/TYFBX	(T)
		DS3 - Electrical - NRC	0.00	TYFAX/TYFBX	
		DS3 - Optical - Monthly - 135 Mbps	1,054.00	TYFCX/TYFDX	
		DS3 - Optical - NRC - 135 Mbps	0.00	TYFCX/TYFDX	
		DS3 - Optical - Monthly - 560 Mbps	1,054.00	TYFGX/TYFHX	
		DS3 - Optical - NRC - 560 Mbps	0.00	TYFGX/TYFHX	
		DS3 - Optical - Monthly - 2.488 Gbps	1,054.00	TYFJX/TYFKX	
		DS3 - Optical - NRC - 2.488 Gbps	0.00	TYFJX/TYFKX	(T)
	Office Channel Termination	DS1 - NRC	270.66	EFWDX	
		DS1 - Monthly	5.31	EFWDX	
		DS3 - NRC	393.44	EFW3X	
		DS3 - Monthly	66.38	EFW3X	

30. Rates and Charges
30.6 Switched Access

30.6.2 Direct Trunked Transport

ID	Service Category	Rate Element	Rate	USOC	
	Channel Mileage	VG 2W - Fixed - Monthly	33.39	1YTES	
		VG 2W - Per Mile - Monthly	3.89	1YTES	
		VG 4W - Fixed - Monthly	33.39	1YTES	
		VG 4W - Per Mile - Monthly	3.89	1YTES	
		DS1 - Fixed - Monthly	66.00	1YTCS	
		DS1 - Per Mile - Monthly	21.25	1YTCS	
		DS3 - Fixed - Monthly	702.00	1YTDS/1YTOS	(T)
		DS3 - Per Mile - Monthly	120.00	1YTDS/1YTOS	(T)
	Mid-Link	DS1 - NRC	526.52	NRBL1	
		DS3 - NRC	0.00	NRBL3	

30.6.3 Tandem Switched Transport–Local Transport Termination

ID	Service Category	Rate Element	Rate	USOC
	Switched Access Service	Originating - Per access minute	0.000716	
		Terminating - Per access minute	0.000716	
	800 Database Access Service	Originating - Per access minute	0.000716	
		Terminating - Per access minute	0.000716	

30.6.4 Tandem Switched Transport–Local Transport Facility

ID	Service Category	Rate Element	Rate	USOC
	Switched Access Service	Originating - Per mile - Per access minute	0.000004	
		Terminating - Per mile - Per access minute	0.000004	
	800 Database Access Service	Originating - Per mile - Per access minute	0.000004	
		Terminating - Per mile - Per access minute	0.000004	

30. Rates and Charges
30.6 Switched Access

30.6.5 Tandem Switched Transport–Tandem Switching

ID	Service Category	Rate Element	Rate	USOC
	Switched Access Service	Originating - Per access minute	0.000503	
		Terminating - Per access minute	0.000503	
	800 Database Access Service	Originating - Per access minute	0.000503	
		Terminating - Per access minute	0.000503	

30.6.6 Interconnection Charge

ID	Service Category	Rate Element	Rate	USOC
	Switched Access Service	Originating - Per access minute	0.000000	
		Terminating - Per access minute	0.000000	
	800 Database Access Service	Originating - Per access minute	0.000000	
		Terminating - Per access minute	0.000000	

30.6.7 Local Transport–Other

ID	Service Category	Rate Element	Rate	USOC	
	Operator Passthrough	Per Call	0.322665		(N)
	Installation	NRC - Per line or trunk	95.00		
	Service Rearrangement	0- Passthrough - Change in Operator Service Traffic Arrangement - NRC - Per 1st TOPS office rearranged	169.82		
		0- Passthrough - Change in Operator Service Traffic Arrangement – NRC - Per additional TOPS office rearranged	108.98		
		SS7 Signaling Option Conversion – First trunk converted	0.00	NRBOA	
		SS7 Signaling Option Conversion – Per additional trunk converted	0.00	NRBOB	
	Common Channel Signaling Access	STP Link Termination – NRC	155.00		
		STP Link Termination – Monthly	71.48		
		STP Link Transport - Fixed Monthly	30.12		

30. Rates and Charges
30.6 Switched Access

30.6.7 Local Transport–Other

ID	Service Category	Rate Element	Rate	USOC
	Common Channel Signaling Access	STP Link Transport - Per Mile Monthly	1.98	
		STP Port - Monthly	450.00	
	SS7 Point Code Change Charge	Initial - NRC	136.87	
		Additional - Each - NRC	15.80	
	DS1 to Voice Multiplexing	Per Arrangement - NRC	0.00	MKW1X
		Per Arrangement - Monthly	291.38	MKW1X
	DS3 to DS1 Multiplexing	Per Arrangement - NRC	0.00	MKW3X/MJW3X
		Per Arrangement - Monthly	950.00	MKW3X/MJW3X

30.6.8 Local Switching

ID	Service Category	Rate Element	Rate	USOC
	Switched Access Service	Originating - Per access minute	0.001934	
		Terminating - Per access minute	0.001934	
	800 Database Access Service	Originating - Per access minute	0.001934	
		Terminating - Per access minute	0.001934	
	Installation	NRC - Per line or trunk	60.00	
	Carrier Identification Parameter	NRC - Per trunk group	70.00	U7CPG
		Monthly - Per trunk group	60.00	U7CPG

30.6.9 Feature Group 2A

ID	Service Category	Rate Element	Rate	USOC	
	Activation of NXX Code	NRC - Per cellular provider - Per NXX code	4,500.00	CUZ-X	
					(D)
					(D)

30. Rates and Charges
30.6 Switched Access

30.6.10 800 Database Access Service

ID	Service Category	Rate Element	Rate	USOC
	Carrier Identification Charge	Per Query	.003981	
	800 to POTS Number Translation	Per Query	.001580	
	Call Handling and Destination Feature	Per Query	.003466	

30.6.11 Shared Billing Arrangement

ID	Service Category	Rate Element	Rate	USOC
	Processing Charge	NRC - Per service order	26.00	CF3SA

30. Rates and Charges
30.7 Reserved for Future Use

30. Rates and Charges
30.8 Reserved for Future Use

30. Rates and Charges

30.9 Reserved for Future Use

30. Rates and Charges
30.10 Reserved for Future Use

30. Rates and Charges
30.11 Special Facilities Routing of Access Services

There are no rates and charges contained within this section. Customer ICB rates and charges are contained in Section 31.

30. Rates and Charges
30.12 Reserved for Future Use

30. Rates and Charges
30.13 Additional Engineering, Labor and Miscellaneous Services

With the exception of the following rate element, refer to Verizon Tariff FCC No. 11, Section 30.13 for applicable rates and charges. (C) (C)

30.13.1 1+ Coin Service (N)

ID	Service Category	Rate Element	Rate	USOC
	1+ Coin Service	Rating - Per Call	.0777	
		Live Operator Assistance - Per Work Second	.0286	
		Per Rate Table – NRC	550.00	
		Branding Per Call	.024	

(N)

30. Rates and Charges
30.14 IntraLATA Presubscription (ILP) Services

30.14.1 IntraLATA Presubscription (ILP)

ID	Service Category	Rate Element	Rate	USOC
	ILP PIC Charge	Intrastate Intralata - NRC - Per telephone exchange service line or trunk	5.00	

30.14.2 PIC Verification Service

ID	Service Category	Rate Element	Rate	USOC
	PIC Verification	NRC - Verbal Request - Per telephone number - Per successful verification	1.35	
		NRC - Request Via Electronic Interface - Per telephone number - Per successful verification	.60	

30.14.3 Intrastate Equal Access Cost Recovery

ID	Service Category	Rate Element	Rate	USOC
	Intrastate Equal Access Cost Recovery	Monthly - Per originating minute of use	0.00	

30. Rates and Charges
30.15 Operating Territory

There are no rates and charges contained within this section.

30. Rates and Charges
30.16 Reserved for Future Use

30. Rates and Charges
30.17 Reserved for Future Use

30. Rates and Charges
30.18 Reserved for Future Use

30. Rates and Charges
30.19 Reserved for Future Use

30. Rates and Charges
30.20 Reserved for Future Use

30. Rates and Charges

30.21 Reserved for Future Use

30. Rates and Charges
30.22 Reserved for Future Use

30. Rates and Charges

30.23 Reserved for Future Use

30. Rates and Charges

30.24 Reserved for Future Use

30. Rates and Charges
30.25 Reserved for Future Use

30. Rates and Charges

30.26 Reserved for Future Use

30. Rates and Charges

30.27 Reserved for Future Use

30. Rates and Charges

30.28 Reserved for Future Use

30. Rates and Charges

30.29 Reserved for Future Use

31. Rates and Charges–Individual Case Basis (ICB) Customer Specific Charges

1. Tariff Information and General Regulations
1.3 Tariff Terminology

1.3.2 Definitions

Local Traffic— For calls between a landline competitive local exchange carrier and the Telephone Company, any intrastate call which is originated and terminated within a local calling area as defined in NHPUC No. 83, Part A, Section 6. IntraLATA calls originated on a presubscription basis or on a casual dialed (10XXX/101XXXX) basis, calls to ported numbers redirected from the Telephone Company to the TC or from the TC to the Telephone Company, and calls delivered to internet service providers are not considered local traffic. For calls between a CMRS provider and the Telephone Company, the term "Local Traffic" denotes any call between the end user of a CMRS provider and an end user of the Telephone Company that originates and terminates within the same Major Trading Area ("MTA"). (X) (C) (C) (C)

Local Link Transmission or Link—The entire transmission path which extends from the network interface/demarcation point at a customer's premises to the main distribution frame or other designated frame or panel in a LEC's wire center which serves the customer. Links are defined by the electrical interface rather than by the type of facility used. (N)

Losses—Any and all losses, costs (including court costs), claims, damages (including fines, penalties and criminal or civil judgments and settlements), injuries, liabilities and expenses (including attorneys' fees).

Main Distribution Frame (MDF)—The distribution frame of the LEC providing the link used to interconnect cable pairs and line and trunk equipment terminals on a switching system.

Major Trading Area (MTA) —An area defined by the FCC for the purpose of issuing licenses for PCS. Each MTA consists of several Basic Trading Areas ("BTA"). The United States is broken down into 51 major trading areas for economic purposes.

Meet Point Billing—The process whereby each of two or more LECs who are involved in the provision of switched exchange access service bills an appropriate tariff rate for its respective portion of jointly provided switched exchange access service to the interexchange carrier under terms among such LECs as agreed to in a separate agreement for switched access meet point billing. In general, there are four alternative meet-point billing arrangements possible, which are:

1) "single bill, single tariff" in which a single bill is presented to the interexchange carrier and each LEC involved applies rates for its portion of the service from the same tariff,
2) "multiple bill, single tariff" in which each involved LEC presents separate bills to the interexchange carrier and each carrier involved applies rates for its portion of the service from the same tariff,
3) "multiple bill, multiple tariff" in which each involved LEC presents separate bills to the interexchange carrier and each carrier involved applies rates for its portion of the service from its own unique tariff, and
4) "single bill, multiple tariff" in which a single bill is rendered to an interexchange carrier from all LECs who are jointly providing switched exchange access service. A single bill consists of all rate elements applicable to access services billed on one statement of charges under one bill account number using each LEC's appropriate access tariffs. The bill could be rendered by, or on behalf of, any of the LECs involved in the provision of service.

Message—A "call" as defined preceding. (N)

1. Tariff Information and General Regulations
1.3 Tariff Terminology

1.3.2 Definitions	
Service Control Point (SCP)—A component of the signaling network that acts as a database to provide information to another component of the signaling network (i.e., Service Switching Point or another SCP) for processing or routing certain types of network calls. A query/response mechanism is typically used in communicating with an SCP.	(X)(T) (X)
Service Management System (SMS)—Allows provision and updating of information on subscribers and services in near-real time for billing and administrative purposes.	(N)
800 SMS—The national database SMS that retains all 800 records.	
Service Switching Point—A signaling point that is capable of initiating database queries.	(N)
Signal Transfer Point (STP)—A component of the SS7 signaling network that performs message routing functions and provides information for the routing of messages between signaling network components. An STP transmits, receives and processes CCS messages and it is a packet switch that utilizes the SS7 protocol.	(X)(T)
Signaling System Seven or SS7—An internationally standardized, general purpose Common Channel Signaling protocol.	(T)
Signaling System Seven (SS7) Network—A digital data network carrying signaling information which interfaces with the Telephone Company voice/data network for services using the American National Standards Institute (ANSI) Common Channel Signaling 7 (CCS7) signaling protocol.	(T)
Signaling Point—A switch that is capable of supporting SS7 signaling.	
Signaling Point of Interconnection—The customer designated location, in the same LATA as the Telephone Company STP, where SS7 signaling information is exchanged between the Telephone Company and the TC.	
Strapping—The act of installing a permanent connection between a POT bay and a collocated party's physical collocation node.	(X)
Subtending End Office of an Access Tandem—An end office that has final trunk group routing through that tandem.	(N) (N)
Switched Exchange Access Service—The offering of transmission or switching services to TCs for the purpose of the origination or termination of telephone toll service. Switched exchange access services, which are offered under NHPUC No. 85 and FCC No. 11 tariffs, include Feature Group A, Feature Group B, Feature Group D, 800/888 access, 900 access and their successors or similar switched exchange access services.	(X) (X)
Switching Point Code—A nine character, numeric code that identifies a switch that is supported by SS7 signaling.	(N)
Synchronous Optical Network or SONET—An optical interface standard that allows for transporting many different digital signals using a basic building block or base transmission rate of 51.84 Mbps (OC-1) ({Optical Carrier} /STS-1 {Synchronous Transport Signal} and higher rates are direct multiples of the base rate, such as OC-3/STS-3 which is equal to three times the base transmission rate.	(N)

1. Tariff Information and General Regulations
1.3 Tariff Terminology

1.3.2 Definitions	
Tandem—The customer designated location, in the same LATA as the Telephone Company STP, where SS7 signaling information is exchanged between the Telephone Company and the telecommunications carrier. Tandem switches are Class 4 switches which provide interconnection between other switches in the network. While the physical switch(es) may serve an end office function, the tandem functionality is strictly that which provides interconnection between end offices. It does so in cases where direct trunk groups are not economically justified, or when the network configuration indicates alternate routing is economically justified. (Ref: BCR SR-TSV-002275, BOC Notes on the LEC Networks).	(C) (C)
Tandem Signaling—All the signaling and data elements necessary for identifying by FGD switched access customer or a TC, each access or TC call in the routing of multi-FGD traffic via common transport to an access tandem.	(N)
Tandem Transit Service—An offering provided by the Telephone Company to requesting competitive LECs that enables the TC whose customer originated an intraLATA call destined for a customer of another LEC (not a customer of the Telephone Company) to utilize a Telephone Company tandem switch as a means of establishing connectivity with the terminating competitive LEC. Tandem transit service is not applicable to calls that utilize an interexchange carrier for which interconnection with either the originating and/or terminating LEC(s) are provided pursuant to meet point billing, while service to the interexchange carrier is provided pursuant to switched exchange access service tariffs or other applicable contract arrangements.	(N)
Technically Feasible Points—Points at which it is technically or operationally feasible or possible to interconnect with or access the Telephone Company network without either creating a legitimate threat to the reliability or security of the Telephone Company's network or precluding the Telephone Company from maintaining responsibility for the management, control, and performance of its network.	
Telecommunications—As defined in the Telecommunications Act of 1996, the transmission between or among points specified by the user of information of the user's choosing, without change in the form or content of the information as sent and received.	
Telecommunications Carrier or TC—A common carrier that meets the following criteria: (1) has been authorized by the Commission to provide local exchange services as a facilities-based carrier, (2) provides dial tone and local exchange service under tariff within the State of New Hampshire, (3) provides reciprocal interconnection arrangements under contract to all local exchange carriers upon request, (4) provides access to E-911 services and statewide relay service, (5) complies with industry standards on all matters such as technical interconnection standards and billing standards, (6) participates in intercarrier compensation arrangements and provides data for such arrangements required according to industry standards and practices, and (7) complies with other applicable requirements set forth in PUC 1300 Local Telecommunications Competition Rules or any other applicable Commission rules. Such term does not include aggregators of Telecommunications Services (as defined in Section 226 of the Act). A Telecommunications Carrier shall be treated as a common carrier under the Act only to the extent that it is engaged in providing Telecommunications Services, except that the FCC shall determine whether the provision of fixed and mobile satellite service shall be treated as common carriage. Synonymous with the term CLEC.	(N) (N)

1. Tariff Information and General Regulations
1.3 Tariff Terminology

1.3.2 Definitions	
TC Location — The point where the Telephone Company terminates the Telephone Company's unbundled interoffice transmission facilities.	(N) (N)
Telecommunications Act—The Telecommunications Act of 1996 and any rules and regulations promulgated thereunder.	(X)
Telecommunications Service—As defined in the Telecommunications Act of 1996, the offering of telecommunications for a fee directly to the public, or to such classes of users and to be effectively available directly to the public, regardless of the facilities used to transmit the telecommunications service.	
Telephone Company—Verizon New England Inc. unless otherwise stated. Verizon New England Inc. also does business under the name Verizon New Hampshire. Advertising and billing of customers are done under the name Verizon New England Inc.	
Telephone Exchange Service—As defined in the Act means: (a) service within a telephone exchange, or within a connected system of telephone exchanges within the same exchange area operated to furnish to subscribers intercommunicating service of the character ordinarily furnished by a single exchange, and which is covered by the exchange service charge, or (b) comparable service provided through a system of switches, transmission equipment, or other facilities (or combination thereof) by which a subscriber can originate and terminate a telecommunications service.	(X)
Telephone Exchange Service Call or Telephone Exchange Service Traffic—A call completed between two telephone exchange service customers of two local exchange carriers located in the same LATA, originated on one party's network and terminated on the other party's network where such call was not carried by a third party as either a presubscribed call (1+) or a casual dialed (101XXXX) call. Telephone exchange service traffic is transported over traffic exchange trunks.	(C) (X)
Telephone Toll Service—As defined in the Act means telephone service between stations in different exchange areas for which there is a separate charge not included in contracts with subscribers for exchange service. For purposes of this tariff, all calls for which toll dialing parity applies are considered telephone toll service calls and all calls for which toll dialing parity does not apply are not considered as telephone toll service calls.	(X)
To Be Determined (TBD)—A rate has not been set for this item. If and when a rate is determined by the New Hampshire Public Utilities Commission, such rate shall apply prospectively from the date of approval. The use of this term does not mean that the Commission has determined that a rate for this element is or is not warranted.	(N) (N)

1. Switched Interconnection Services (N)

1.1 Description

1.1.1	General
A.	Switched interconnection service provides for access to the points in the Telephone Company's network where TCs can interchange traffic with the Telephone Company, specifically the line side of the end office switch (Meet Point C), trunk side of the end office switch (Meet Point A), Trunk side of the tandem switch (Meet Point B), Central Office Cross Connect Points (Collocation), and Out of Band Signaling (CCS/SS7 Arrangements).
B.	For purposes of this section, a carrier purchasing unbundled network elements is considered a facilities based carrier.
C.	**Limitations**
1.	Switched Interconnection Services may only be used for the termination of local calls to NXXs served on the Telephone Company's network, including calls redirected from the TC to the Telephone Company under Number Portability that otherwise meet the criteria described in Part B, Section 11. Facilities used to provide Switched Interconnection Services may be used to deliver toll, and/or interexchange traffic as provided in Section 1.7.3 following. Toll and Interexchange Switched Access Services that terminate on Switched Interconnection facilities will be rated under the appropriate State and/or Federal tariffs ("Feature Group Service"). Calls originating from TC end users who are assigned telephone numbers residing within that TC's NXX code and terminating to end users assigned telephone numbers residing within NXX codes that are not Telephone Company codes (e.g., other TCs, Wireless, Independent Telephone Companies' end offices) are not provided under this section, except as provided in Section 1.3.3 under Tandem Transit Service.
2.	Two-Way Meet Point RTET arrangements are not available with the following arrangements, services or options which are otherwise provided under this tariff:
a.	E911
b.	Directory Assistance and Operator Services
c.	Information Services
d.	Mass Announcement
e.	Meet Point C
f.	Unbundled Network Elements
D.	TC Switched Service provides termination of switched local traffic. Service termination rates described herein are applicable regardless of whether a TC has its own switching facilities or the TC is utilizing unbundled elements purchased from the Telephone Company. A separate Carrier Identification Code (CIC) is required to properly administer billing of this service arrangement. The CIC is either specified by the TC or assigned by the Telephone Company for its internal use in the billing process.

(N)

1. Switched Interconnection Services (N)

1.1 Description

1.1.1	General
E.	Signaling for line side connections will utilize dial pulse/DTMF, loop or ground start. Signaling for trunk side connections should use CCS/SS7 protocol where available and Multi Frequency (MF) signaling where CCS/SS7 signaling is not available or appropriate.
1.	When CCS/SS7 signaling is used, service must conform to Technical Publications TR-TSV-000905 and TR-TSV-000962.
F.	This service provides the termination and transmission of local calls from the point of interconnection to the Telephone Company or other TC end users where the traffic terminates.
G.	TC Switched Service is provided as a terminating voice frequency transmission path composed of facilities determined by the TC. The voice frequency transmission path permits the transport of calls in the terminating direction from the TC's POT to the Telephone Company or other TC end users. All voice frequency transmission paths may be comprised of any form or configuration of plant capable of and typically used in the telecommunications industry for the transmission of voice and associated telephone signals within the frequency bandwidth of approximately 300 to 3000 Hz.
1.	The TC will determine whether the service is to be directly routed to a Meet Point A Arrangement, Meet Point B Arrangement, Meet Point C Arrangement or, when facilities permit, to Two-Way Meet Point A Reciprocal Traffic Exchange Trunk (RTET) or Two-Way Meet Point B RTET.
H.	Switched interconnection service will not be prorated to reflect shared use, or mixed use with any other services, except as provided for under the provisions for combined traffic.
I.	A TC interconnecting with the Telephone Company is required to deliver its originating traffic to each Telephone Company access tandem within the LATA.
1.	Signaling for these connections will use CCS/SS7 protocol (where available) and multi-frequency protocol where CCS/SS7 is not available. TC switched interconnection is available with Interface Groups 6 & 9.

1.1.2	Timing and Rating of Usage
A.	There are two types of rates and charges that apply to TC Switched Service provided under the Minutes of Use Schedule. These are usage rates and nonrecurring charges.
B.	When the TC uses combined trunk groups as described in Section 1.7.3, the rates and charges described below will only apply to the local traffic of the TC. The local traffic will be determined based on the data provided as described in Section 1.7 following
C.	Where credit adjustments apply, credit adjustments will be computed by apportioning the total intrastate usage associated with the honored claim into day, evening and night periods using the Time of Day distribution applicable to the CLEC. The usage is then multiplied by the appropriate day, evening and night rates.

(N)

1. Switched Interconnection Services (N)
1.3 Meet Point B

1.3.1	Tandem Meet Point (Meet Point B) Arrangement
A.	This arrangement provides a TC with a trunk side point of interconnection at 1.544 Mbps (DS1 rate) (24 voice grade equivalent channels) on the Telephone Company's access tandem switch for access only to the Telephone Company's end offices subtending that tandem switch. The end offices subtending tandem switches are listed in the Local Exchange Routing Guide (LERG) published by Bellcore.
1.	In addition, a TC can utilize this arrangement for the exchange of traffic with other TCs or an ITC through the use of Tandem Transit Service as set forth in Section 1.3.3.

1.3.2	Two Way Meet Point B Reciprocal Traffic Exchange Trunk (RTET) Arrangement
A.	This arrangement provides a TC with a trunk side connection at 1.544 Mbps (DS1 rate) or 44.736 Mbps (DS3 rate with CCSA/SS7 protocol to a point of termination located at the same V&H coordinates as that of the end office of the Telephone Company's access tandem switch for access only to the Telephone Company's end offices subtending that tandem switch. The end offices subtending tandem switches are published in the LERG. 64 Clear Channel Capability is an available option with this arrangement.
1.	Two-Way Meet Point B RTET provides for the following terminations: (1) TC termination of its traffic from its point of termination to a Telephone Company access tandem; and (2) The Telephone Company termination of traffic from its access tandem to a TC's point of interconnection over the same trunk group.

1.3.3	Tandem Transit Service (TTS)
A.	TTS provides for the exchange of POTS traffic between two TCs where the two TCs purchase a meet point B arrangement under this tariff from the same Telephone Company access tandem switch, or between TCs utilizing Dedicated Transport and unbundled local switching through a Telephone Company access tandem switch. TTS also provides for the exchange of local traffic between a TC and an ITC, or other carrier where the TC purchases a meet point B arrangement and the ITC is also connected to the same Telephone Company access tandem switch.
B.	When such calls are terminated to another TC, ITC or other carrier, the Telephone Company will record and transmit call details to the terminating TC, ITC or other carrier and will provide tandem switching and transport on these calls.
C.	Payment of terminating access charges and associated record processing charges for TTS calls are the responsibility of the originating TC. The Telephone Company and the terminating TC, ITC or other carrier will each bill its appropriate charges to the originating TC. (N)

1. Switched Interconnection Services (N)
1.7 Responsibility of the TC

1.7.3	Combined Traffic
A.	The TC may combine toll, interLATA, and interexchange traffic originating from the TC's own network, on the same trunk groups (combined trunks) as used for terminating local traffic.
1.	Where the TC chooses to combine such traffic, the TC must provide the Telephone Company with percentages of use of the local traffic on the combined trunk groups as follows.
a.	The TC can provide Calling Party Number (CPN) through SS7 signaling on a per call basis where available and technically feasible without material impairment of service performance for all traffic terminated on combined trunk groups.
b.	If the per call usage is not available, the TC must provide, on request with sufficient advance notification from the Telephone Company, all terminating call detail records for each month requested, in standard industry format for all local traffic terminated on the combined trunk groups, and a summary of those records by traffic type broken down by end office which shows the development of local usage percentage.
B.	**Incorrect Usage Reporting**—Where local usage percentages provided by the TC are found, upon review, to be incorrect, the Telephone Company may rerate the traffic based on accurate information and the TC will be backbilled or credited those amounts for a period retroactive to the date that the incorrect local usage percentage was reported, but not to exceed 24 months.
1.	Such backbilled amounts are subject to a late payment penalty and payment shall be made in immediately available funds, within 31 days after the bill day or by the following bill date, whichever is a shorter period. Interest will not apply to credited amounts which result from incorrect local usage percentages reported by the TC.
C.	The TC must work cooperatively with the Telephone Company to review the call records and provide them in a format and via the medium of information exchange selected by the Telephone Company.
D.	The Telephone Company will rate and bill all terminating traffic on the combined trunk groups for which it has not received complete call detail records or CPN in a timely manner under its appropriate switched access state and/or federal tariffs.

1.7.4	Segregated Traffic
A.	The TC may segregate its local traffic from all other traffic through the use of separate trunk groups, CIC codes and billing accounts. If the TC chooses this option, there are no requirements regarding provision of call detail records unless otherwise stated herein.
B.	When the TC chooses this arrangement, the TC shall keep sufficient detail from which the Telephone Company can verify that only specific TC's local traffic is terminated on the TC's trunks which have been purchased under this tariff.

(N)

EXHIBIT II

REFERENCED ORDERS CONSISTING OF:

NH PUC Docket DE 90-002	Order No. 20,007
	Report and Order No. 20,864
	Report and Order No. 20,916
	Report and Order No. 20,980
NH PUC Docket DT 00-223	Order No. 24,080 (pp. 56-58, 60-61)
CC Docket No. 96-98	First Report and Order (FCC 96-325, ¶¶ 1033-1035)
NY PSC Case No. 04-C-1548	Order Denying WilTel Communications Complaint

---

Note: Paper copies only.

3/11/91 0479

DE 90-002
DE 90-108
DE 90-127
DE 87-249
AT&T Communications of New Hampshire.
MCI Telecommunications Corporation.
U S Sprint Communications Company of New Hampshire
Long Distance North of New Hampshire.

Double Sided

..00..

O R D E R N O. 20,077

On January 21, 1991, the New Hampshire Public Utilities Commission granted interim authority to AT&T Communications of New Hampshire, MCI Telecommunications Corporation, U.S. Sprint Communications Company of New Hampshire and Long Distance North of New Hampshire to offer a number of specific custom network add on services or to resell intrastate long distance traffic, as specified in consecutive Order Nos, 20,039, 20,040, 20,041 and 20,042; and

Whereas, approval of these services was subject to several conditions, including inter alia, the obligation by the carriers to compensate the appropriate local exchange company for originating and terminating access pursuant to New England Telephone Company (NET) Tariff N.H.P.U.C. 78, Page 5, Section 4, Switched Access Service Rate or its relevant equivalent contained in the tariffs of the independent exchange companies; and

Whereas, on January 25, 1991, NET filed a motion for clarification; or in the alternative, a stay of the commission's order; and

0
0- .8
0-127
7-249

Whereas, in its motion NET requested that the commission stay the effective date of interim authorization until such time that NET files and the commission approves a compliance access tariff and NET's InfoAge New Hampshire 2000 filing (NET 89-010); and

Whereas, the commission's intent in issuing Order Nos 20,039, 2,040, 20,041 and 20,042 was to authorize the above mentioned companies to commence providing service on an interim basis immediately upon their compliance and conditions set forth in the above referenced orders; and

Whereas, lengthy minimum service periods offered by the interexchange carriers may foreclose NET's ability to compete in the future; and

Whereas, a delay in the implementation of the effective date of the interim authorizations is contrary to the commission's intent of authorizing intrastate competition on an interim basis to allow the commission to analyze the effect of competition in the intrastate telecommunications market; it is hereby

Ordered, that NET's motion for a stay is hereby denied; and it is

Further Ordered, that Condition 6 of Order No's 20,039, 20,040, 20,041 and 20,042 be clarified to state that the Switched Access Rates in Tariff No 78 apply to intrastate switched access as used, on either the originating or terminating end or both, when switched access is used in the

002
108
90-127
87-249

provision of toll services, and special access charges apply when special access facilites are used; and it is

Further Ordered, that during the interim period all carriers be prohibited from offering minimum service periods greater than thirty days, and it is

Further Ordered, that AT&T, MCI, U.S. Sprint and LDN are authorized to provide services on an interim basis effective upon their compliance with terms and conditions set forth in the above mentioned orders as clarified herein.

By order of the Public Utilities Commission of New Hampshire this eleventh day of March, 1991.

Larry M. Smukler
Chairman

Bruce B. Ellsworth
Commissioner

Linda G. Bisson
Commissioner

Attested By:

Wynn E. Arnold
Executive Director & Secretary

DE 90-002

GENERIC INVESTIGATION INTO INTRALATA TOLL COMPETITION ACCESS RATES

Order Conditionally Accepting the Stipulation of the Parties

..00..

Appearances: As previously noted.

REPORT

A. INTRODUCTION

After months of litigation and extensive negotiations, the parties have entered a Stipulation and Agreement (Stipulation) to resolve the disputed issues in this proceeding, including the fundamental issue of the level and structure of access charges for intrastate toll competition in New Hampshire. The Stipulation presents a new regulatory framework for intrastate toll competition to evolve in New Hampshire through a two year experimental period and, if appropriate, into the future. We believe that the Stipulation represents a significant step forward in bringing the benefits of competition to New Hampshire and its ratepayers.

The Commission is also persuaded, however, based on the record to date, that the pace and reduction of access charges contained in the Stipulation are inadequate. To better assure the likelihood that competition will benefit New Hampshire and its ratepayers, we believe that access charges should eventually reach interstate levels over a four year transitional period. In this Order, the Commission reviews the public interest implications of the Stipulation and proposes modifications in the Stipulation which are necessary to protect the public

interest. Therefore, we approve the Stipulation subject to certain conditions.

B. PROCEDURAL HISTORY

On December 4, 1987, Long Distance North of New Hampshire, Inc. (LDN) filed a petition for a franchise to operate as a reseller of long distance telephone service in the state of New Hampshire. DE 87-249. On January 4, 1990, AT&T Communications of NH, Inc. (AT&T) filed a petition to provide certain intrastate toll services in New Hampshire. DE 90-002. Shortly thereafter, MCI Telecommunications Corporation of New Hampshire, Inc. (MCI) and Sprint Communications Company of New Hampshire, Inc. (Sprint) filed similar petitions. DE 90-108; DE 90-127. On June 7, 1990, the Commission issued Report and Order No. 19,853 which consolidated the four dockets and established this docket, DE 90-002, as a generic investigation into telecommunications competition.

The parties to this docket are interexchange carriers (IXCs), AT&T, LDN, MCI and Sprint; local exchange companies (LECs), Bretton Woods Telephone Company, Dunbarton Telephone Company, Inc., Granite State Telephone, Inc., Merrimack County Telephone Company, Wilton Telephone Company, Inc., Chichester Telephone Company, Kearsarge Telephone Company, Meriden Telephone Company, Inc., Union Telephone Company, Contel of NH, Inc., d/b/a GTE NH and Contel of Maine, Inc., d/b/a GTE ME and New England Telephone and Telegraph Company (NET or the

Company); the Office of Consumer Advocate; the Business and Industry Association and the Commission Staff Advocates (Staff). Atlantic Connections, Ltd. filed a motion to intervene but failed to appear or to participate in the docket other than to offer comments on the Stipulation, despite being served with notices. Dixville Telephone Company was provided notice of this docket but has chosen not to appear or participate.

On January 21, 1991, the Commission issued Order Nos. 20,039, 20,040, 20,041, and 20,042 granting LDN, AT&T, MCI and Sprint, respectively, "interim" authority to provide intrastate toll services and required NET to extend its access tariff to accommodate the approved competitive services. On March 20, 1991, effective March 21, 1991, NET filed interim intrastate access tariffs in compliance with these orders.

On January 17, 1992 the parties filed with the Commission a Stipulation and Agreement (the 1/17/92 Stipulation), which identified the issues to be litigated before the Commission and set other matters for determination in workshops or other proceedings in the future. In addition, the parties stipulated that competitive toll entry should be authorized on a trial basis for two years from the date of NET's permanent access tariff. The 1/17/92 Stipulation was approved by the Commission at its public meeting on January 20, 1992. By order No. 20,528 (July 2, 1992) the form and administration of access settlements was explicitly identified to be addressed in this phase of the proceeding.

By Report and Order No. 20,608 (September 21, 1992), in response to motions filed by the LECs, the Commission designated certain Staff members as Staff Advocates and other Staff members as Decisional Employees, all pursuant to N.H. Admin. Rules, PUC 203.15.

Hearings on the merits commenced September 22, 1992 and continued in October, November and December 1992. After 15 hearing days, the parties renewed their efforts to resolve this phase of the docket. In order to facilitate such negotiations, the Commission granted the parties' request to use hearing dates scheduled for January and February, 1993, for settlement discussions. The Stipulation is a result of those discussions.

C. PUBLIC INTEREST STANDARD

The Commission has carefully analyzed the Stipulation based on our traditional standard of whether the Stipulation will result in rates that are just and reasonable and in the public good. This essentially requires us to strike a balance between the collective interests of the parties and the interests of New Hampshire and its ratepayers.

The Commission regards stipulations and negotiated compromises as desirable and as reasonable options to be considered in the regulatory process. Since the Commission encourages the consideration of settlements, we accord significant deference to stipulations in our public interest analysis. Rather than insisting that any stipulation match the

relief that the Commission would have ordered had the matter proceeded to final decision, we will approve stipulated settlements so long as we are satisfied on balance that the settlement promotes the public interest. This is the approach that the Commission has followed in evaluating the Stipulation in this case.

D. DOCKET DR 89-010

In evaluating the Stipulation, the Commission also is guided by its findings in DR 89-010. In that proceeding, the Commission adopted, with modifications, NET's incremental cost study (ICS) as a basis for rate design and addressed NET's proposal to change the form of regulation in New Hampshire from traditional rate of return regulation to incentive price cap regulation.

In DR 89-010, the Commission utilized the results of the ICS to test NET's claim that basic local exchange services have been and continue to be subsidized by toll. Re New England Telephone and Telegraph Company (NET), 76 NHPUC 150 at 166-167 (1991); See also, Re NET, 76 NHPUC 294 (1991). After lengthy hearings and a careful review of the record evidence, the Commission concluded that NET's claim of subsidy was based on the mistaken and misleading assumption that the non-traffic-sensitive (NTS) costs of the local loop should be assigned exclusively to basic exchange services. Id. Assigning these costs exclusively to basic exchange services resulted in

an appearance that basic exchange services were priced below their incremental cost and therefore were being subsidized by other services.

When NTS costs were appropriately allocated among all services utilizing loop facilities, and therefore causing loop costs, including toll, it was clear that basic exchange services were not being subsidized by toll or any other service. Indeed, the Commission found that "...[b]asic exchange services are not only recovering their incremental costs but are also contributing towards common overhead costs." Id. at 167.

The Commission also noted NET's testimony that incremental costs of NTS loop approximates its average (or total) costs. Based on this testimony and other record evidence, the Commission found:

> Given that NTS loop provisioning represents approximately 95% of the incremental cost of basic exchange service, the commission concludes that pricing basic exchange service at its incremental cost will enable the company to recover the average cost of providing basic exchange service without the need to apply any closing methodology. Id.

The record evidence demonstrated NET's provisioning of basic exchange services was not characterized by subadditivity of costs, so that pricing basic exchange services at incremental cost would recover NET's total cost of providing basic exchange services.

The fundamental rate design principle emerging from DR 89-010 is that basic exchange services, which currently are

priced above incremental cost, recover for NET not only the total cost of providing basic exchange service, but contribute additional revenues to cover NET's overall revenue requirement.

This recognition of the true revenue-cost relationship of basic exchange services not only dispelled any claim that basic exchange services were being subsidized by toll, but was also fundamental to our analysis of NET's proposal to change the form of regulation for NET in New Hampshire. NET maintained that incentive price cap regulation was necessary to enable NET to respond effectively to changing market conditions in the telecommunications industry. Among other things, the Company claimed that rate rebalancing through price cap regulation would provide it the opportunity to raise residential rates over time to meet the incremental cost of providing service, while allowing NET to lower intraLATA toll rates to meet competition.

Based on our analysis of NET's ICS, and the proper allocation of NTS costs, we found that residential service is currently priced above incremental cost and therefore is not being subsidized by intrastate toll services. We determined that it was neither necessary nor appropriate to alter the revenue-cost relationship of basic exchange services. The Commission therefore rejected the concept of rate rebalancing under alternative regulation as proposed by NET. Indeed, we concluded that any alternative regulation proposal must sever the link between the monopoly services and competitive services to prevent the possibility of monopoly ratepayers subsidizing

NET's competitive activities. Re NET, 76 NHPUC 393 at 412 (1991). Consequently, during the DR 91-084 collaborative process on regulatory change which followed DR 89-010, we emphasized that any alternative regulation proposal must "sever the link between monopoly and non-monopoly services." E.g., 1/27/92 Status Conference Hearing at p. 78.

Our analysis in DR 89-010 will continue to guide the Commission on rate design and alternative regulation proposals, particularly where claims are made that anticipated losses in revenues from competitive services pose a threat to current levels of basic exchange rates. Guided by these principles, we turn now to the public interest implications of the Stipulation.

E. REVIEW OF PROVISIONS OF STIPULATION

1. Ratepayer Interests

The Stipulation contains two primary provisions relating to ratepayer interests during the two year competitive experiment. First, a price ceiling for NET's toll services is established at current rates as of the date of the approval of the Stipulation. Second, NET has agreed not to initiate a request for an increase in its existing basic exchange rates sooner than January 1, 1995, and has also agreed that no such increase will become effective prior to July 1, 1995. The only exception is that NET is authorized to apply to the Commission to seek to pass-through to ratepayers exogenous cost changes beyond its control. The Commission accepts both of these terms,

but for the reasons discussed below believes neither is necessary given current and anticipated market conditions.

Toll competition should effectively reduce toll prices well below current levels. Thus, we do not believe that ratepayers realistically face the prospect of an increase in toll rates even absent the ceiling agreed to by the parties. Indeed, should rates remain at current levels, the competitive experiment will have failed and the Commission will consider appropriate steps to inject into the intrastate toll market effective incentives to assure the emergence of real price competition. Nonetheless, since the stipulated toll ceiling offers a degree of protection from rate increases, and has been agreed to by the parties, we have no difficulty approving this provision.

For similar reasons, the Commission will accept NET's two year commitment not to seek basic exchange rate increases, despite our view that any need to increase basic exchange rates is not likely during the two year period of the competitive experiment. While the parties have claimed that this commitment represents an important benefit of the Stipulation to protect basic ratepayers from having to offset NET revenue losses resulting from competition, we believe that such claims are overstated for several reasons.

First, as we noted in our discussion of Docket 89-010, basic exchange rates in New Hampshire recover the costs of providing such services and contribute additional revenues for

NET's overall revenue requirement. We know of no economic trends or technological developments that would cause these relationships to change during the next two years. Therefore, we believe it highly unlikely that NET could justify seeking any increase in basic exchange rates for the next two years. Basic exchange ratepayers in New Hampshire appear to be protected from rate increases as a result of economic facts and not through any compromise of the parties and Staff in this proceeding.

Second, as the Commission made clear in DR 89-010 and DR 91-084, we are disinclined to approve rate designs which "link" the outcomes of competition with increases in basic exchange rates in connection with alternative regulation, such as the new regulatory framework for toll services established by the Stipulation.

Third, given the uncertainties of competition, the uncertainties of national and State economic conditions, the uncertainties of stimulation and other forms of market growth, and other similar considerations, it is simply impossible to predict the impact of competition on NET's revenues. Therefore, even were the Commission to permit NET to rebalance basic exchange rates to recover revenue losses from toll, we have no way of determining until the competitive experiment is concluded whether such losses will in fact occur to any significant degree prior to July 1, 1995.

The claimed benefits of NET's stipulated commitment not to seek basic exchange rate increases is further diminished by

the fact this commitment is not absolute. The Stipulation provides NET with the authority to apply to the Commission during the two year period to recover exogenous cost changes through increased rates for regulated intrastate services, including basic exchange rates. The Stipulation contemplates Commission approval of the specified exogenous cost changes so long as such changes are beyond NET's control. Although we anticipate that such exogenous cost changes will not be significant, nonetheless, as a result of the exogenous cost provisions of the Stipulation, ratepayers, including basic exchange ratepayers, face effective rate increases they would not otherwise incur. We retain complete authority to reject or accept any such application, and to determine which services shall face rate increases to recover these costs.

The Commission recognizes the intent of the parties to protect basic exchange ratepayers from rate increases. We also recognize that other states have permitted rate rebalancing ancillary to toll competition. In New Hampshire, however, unlike those other states, basic exchange services not only fully recover their costs, but also provide additional revenues to assist NET in meeting its revenue requirement. Thus, rate rebalancing (at least in the manner contemplated by the Stipulation) is neither appropriate nor necessary in New Hampshire.

For these reasons, while we agree that New Hampshire's basic exchange ratepayers are effectively protected from rate

increases for the next two years, we do not believe that this benefit flows from the Stipulation. As we have indicated, since basic exchange rates fully recover the costs of providing such services and provide additional revenues to recover NET's joint and common costs of providing other services, the likelihood of any increase in basic exchange rates over the two years of the competitive experiment is remote. Nonetheless, the Commission appreciates any efforts to protect monopoly ratepayers and despite our view that this provision is unnecessary, we accept it as part of the overall settlement of the parties.

The Commission also approves the exogenous cost change exception to NET's commitment on basic rates. We are familiar, of course, with the concept of exogenous cost changes. An automatic pass-through of exogenous cost changes is a common feature of alternative regulation schemes adopted in other jurisdictions and was included as part of NET's alternative regulation proposal in Docket 89-010. However, the testimony offered at the Stipulation hearing concerning the intent of the parties confirmed our understanding that this Stipulation does not provide for an automatic pass-through, but rather leaves the Commission with the authority to approve or disapprove any pass-through of exogenous costs and to determine how those costs will be recovered. We will therefore approve the exogenous cost exception.

2. NET Protection

The Stipulation provides NET with broad flexibility to compete in the intrastate toll marketplace. Within the wide range of the Stipulation's price floors and price ceilings for toll services, NET is given broad and virtually unfettered discretion to set or change at any time toll rates to whatever level it deems appropriate to respond to competition. Similarly, the Stipulation provides NET authority to revise other terms and conditions of existing toll services and to introduce new intraLATA toll services, including new optional toll calling plans, with an expedited 30 day Commission approval process. The Stipulation also adds to NET's existing contracting flexibility to enable it to compete more effectively for long term contracts for intrastate toll services.

The Commission believes that the additional competitive flexibility provided to NET in the Stipulation, which include significant departures from existing regulatory requirements in New Hampshire, is a necessary predicate for the introduction of effective intraLATA toll competition in New Hampshire. NET must be provided with a fair opportunity to compete with other toll providers if New Hampshire and its ratepayers are to truly reap the benefits of competition through lower prices and new and innovative services. The Stipulation provides NET with the flexibility in pricing and the ability to introduce new services or revise existing services to enable it to be an aggressive and innovative competitor.

An effectively competitive marketplace is totally at odds with any notion that NET's total revenues can be "guaranteed" to remain at any particular level. The Commission must therefore assure NET the opportunity to compete effectively with other toll providers. We are satisfied that the Stipulation provides NET with the flexibility and opportunity to be a viable, efficient and effective competitor in the provision of toll services in New Hampshire.

The Commission also believes that NET has, or should have, implemented the necessary structural and organizational changes to respond effectively to competition, given the lengthy period that the Company has had to plan for the arrival of competition -- from at least December 1987 when LDN applied for authority to provide long distance services in New Hampshire. We find, therefore, that the provisions of the Stipulation providing NET with additional pricing, service offering, and contracting flexibility clearly promote the public interest.

The Stipulation also affords NET a degree of earnings protection since it precludes the Commission from initiating a show cause order sooner than January 1, 1995 as to NET's earning level or cost of capital and precludes the Commission from implementing any show cause as to these issues prior to July 1, 1995. The Stipulation thereby effectively precludes the Commission from undertaking a proceeding either to determine whether the Company's earnings exceed its authorized rate of return or to determine whether NET's current authorized overall

rate of return of 11.25% is appropriate.

The Staff has indicated that NET's earnings in 1992 were close to and within authorized limits and did not anticipate any significant increases in NET's level of earnings over the next two years with competition for intrastate toll services expected to become more intense. Therefore, we do not anticipate that the provision limiting the Commission's ability to initiate a show cause order as to NET's earnings will harm ratepayers.

NET's current authorized overall rate of return of 11.25% was established by stipulated agreement between NET and Staff in 1990 based on a 1988 test year. Although the Commission recently has set lower authorized returns on equity for other LECs operating in New Hampshire, and has approved long term debt refinancing at lower rates for NET, we have no evidence in this docket that NET's authorized return is inappropriate given current market conditions and risks. For these reasons, we will accept these NET earning protection provisions as part of the overall stipulated settlement.

NET also will receive additional protections as a result of the Stipulation's creation of a special fund, known as the Local Ratepayer Protection Mechanism (LRPM), to compensate LECs to some degree for revenue shortfalls resulting from competition. Our public interest analysis of the LRPM, including NET's participation, is contained in a later section of this Order.

3. IXC Protection

The Stipulation also goes far to protect the continuing competitive vitality of the IXCs by imputing access charges to LEC toll rates. Access charge imputation prevents a LEC from either imposing a price squeeze against competing toll providers or subsidizing LEC toll services from monopoly service revenues. We reiterate our views on imputation from DR 89-010. As we explained in that proceeding, since the LECs remain bottleneck providers of local exchange and carrier access services, and since access is a necessary component of toll services, the Commission believes it appropriate to safeguard competition by foreclosing LEC ability to price toll services at or below the cost of access services charged to competing toll providers. Re NET, 76 NHPUC 150 at 171 (1991). Further, the Commission believes that imputation of access charges will forestall any improper subsidy of intraLATA toll service at the expense of other services, limit inefficient use of toll facilities and limit the uneconomic bypass of local exchange facilities. Id. In sum, the Commission continues to believe that imputation helps to ensure the development of effective intraLATA telecommuncations competition. Id.

The parties have thoughtfully constructed an imputation system that protects the IXCs from an anticompetitive price squeeze, yet permits NET sufficient pricing flexibility to compete effectively. The Stipulation requires NET to price its toll services at a rate that will recover for each MTS (message

telecommunications service) and 800 toll segment an average retail revenue per minute (ARPM) which exceeds the access rate per minute. The Stipulation establishes an average NET price floor for each segment based on the imputation of NET's access rates for the anticipated mix of switched and special access used by customers in that segment, plus a "negotiated add on" to cover NET's non-access costs of providing toll. While the market segment averaging approach creates some opportunities for a price squeeze at the level of an individual customer simply because of the averaging process, it effectively precludes a squeeze across each of the identified market segments. We find that the Stipulation's imputation rules protect competition and are in the public interest.

We do have concerns about the potential competitive impact of the imputation formula in MTS Segment B (customers whose monthly volume of outbound intrastate minutes of usage from a customer location is between 1,001 and 5000). The imputed price floor for MTS B is based on the assumption that the relevant form of terminating access is 100% switched, and the relevant form of originating access is 75% switched and 25% special access. However, the range of customers in MTS B includes both, at the low end, a relatively large number of small businesses which will rely almost entirely on services using switched access at both the originating and terminating end of an intraLATA toll call, and at the high end, a number of somewhat larger businesses which will rely almost exclusively on

services using special access at one end of the call.

The averaging of these distinct customer groups under MTS B creates opportunities for competitive abuse since the assumed mix of switched and special access for imputation purposes is not reflective of the fact that many customers within the segment rely exclusively on switched access. For instance, NET could discount its prices below the floor (below access) for special access customers and yet meet the segment-wide APRM by discounting little, if at all, for switched access customers. NET could also discount below access for the switched customers and yet meet the segment-wide ARPM by discounting little, if at all, for special access customers. In either situation, competing toll carriers would be subject to a price squeeze in attempting to meet NET's prices for particular groups of customers within the MTS B segment.

While it is true that NET's ability to price below the access/negotiated add-on floor for any particular customer or group of customers and still meet the segment-wide ARPM is inherent in any averaging process, the concern is particularly acute for MTS B since it mixes two distinct classes of customers, some of whom will be entirely dependent on switched access services, and others of whom will be able to use special access services.

During the hearings on the Stipulation, the parties explained that the MTS B issue was carefully considered during the negotiation process and that the mixing of distinct customer

classes was designed to promote fairness by allowing NET to compete for special access customers within this segment. Due to NET's inability to provide interLATA toll services under the Modified Final Judgment, the IXCs have a significant competitive advantage at MTS B's upper end because of their ability to combine interstate and intrastate traffic to qualify a particular customer for special access. May 4, 1993 Hearing, pp.97-113.

The Commission appreciates the candor of the parties, and in particular AT&T, in explaining the "dilemma of MTS-B." May 4, 1993 Hearing, p. 113. We are satisfied that the stipulated resolution of this dilemma represents a fair compromise to protect and promote competition between NET and the IXCs and is in the public interest. Given our concerns about the potential for anticompetitive effects, we will direct our Staff to monitor MTS segment B for any price squeeze effects during the two years of the experiment. Proper mechanisms will be initiated to facilitate the Staff's monitoring effort.

Another important benefit to the IXCs provided by the Stipulation is the elimination of current limitations on contracts of more than 30 days duration. Currently, only NET is authorized to employ long term contracts in marketing toll services. The Stipulation effectively provides the IXCs with similar authority. This provision also clearly promotes competition and is in the public interest.

4. Independent Telephone Company (ITC) Protection

The Stipulation creates a transitional fund, LRPM, to ease the ITCs' change from their traditional role as joint toll providers with NET under the current settlement pooling process to becoming access providers. The LRPM will be funded by a surcharge on toll and basic exchange services, but the fund is capped at a level not to exceed one half of one percent of basic exchange and toll revenues. The surcharge will be funded solely by toll services until the funding requirement of LRPM exceeds $300,000 annually at which point the LRPM will be funded by both toll and basic exchange services. LRPM payments will begin in October 1994 for the ITCs. NET will also be eligible to qualify for LRPM payments beginning in October 1996.

The formula for calculating LRPM is designed to help offset to some degree the ITC's (and NET after October 1996) costs of providing regulated intrastate telecommunications services, where those costs exceed revenues from providing regulated intrastate toll and access services, adjusted for a local revenue target per access line. The formula includes annual adjustments in LEC total costs up to a threshold equal to 60% of the percent increase in the Gross Domestic Product Price Index. To the extent that a LEC seeks adjustments above the GDP-PI threshold, the Commission will review for reasonableness the costs sought to be included.

An individual ITC also may file a rate case if it believes that rate increases are justified by increased costs or

otherwise. The Commission will review any such filings for reasonableness pursuant to RSA Chapter 378.

Although the LRPM will not result in significant sums given the LRPM cap, it represents a significant departure from traditional rate of return regulation in New Hampshire. The LRPM permits affected LECs automatically to increase rates to pass through to ratepayers increases in costs in the absence of a formal rate case and without regard to current levels of earnings. While the Commission does not regard traditional rate of return regulation as sacrosanct, we have made clear at least with regard to NET that any form of alternative regulation must break the "linkage" between monopoly and non-monopoly services. The LRPM fails to sever this link. Indeed, LRPM ties basic exchange rate increases to shortfalls in LEC revenues due to increased competition in toll markets. The Commission therefore has a significant concern about NET's participation in LRPM.

Nonetheless, the Commission is prepared to approve the LRPM on a purely transitional basis for the period covered by the Stipulation and only as part of the overall settlement in this proceeding. Although we do not anticipate that the LRPM fund will amount to significant sums or to significant increases in rates given the stipulated cap on the LRPM fund, it does provide a modest amount of protection for the LECs to adjust to competition. On this basis, and in the context of the overall Stipulation, and despite our reservations about NET's participation, the Commission finds that the LRPM is in the

public interest.

5. NET Access Charges

A fundamental issue in any proceeding relating to the introduction of competition is to establish appropriate access charges that IXCs must pay to the LECs for originating and terminating toll traffic over LEC bottleneck facilities. The cost of access is a crucial element in the overall cost structure of an intraLATA toll provider and, of course, is passed through to customers in toll rates. New Hampshire, with access charges of approximately 20 cents per minute, currently has the second highest access rates in the United States, following only Maine.

In pre-filed testimony in this proceeding, our Staff maintained that NET's current access charges are excessive and should be immediately reduced to the current interstate level of approximately 8 cents in order to maximize the opportunities for competition to emerge in New Hampshire. The IXC's urged a similar result with AT&T recommending a four year transition to reach the interstate level.

The Stipulation establishes a transitional reduction from NET's current rate of approximately 20 cents per minute (for combined originating and terminating) to 12 cents a minute over a four year period. The transition schedule for Non-800 Access Rates is:

1993-16 cents

1994-14 cents

1995-14 cents

1996-12 cents

The parties have structured the transition so that terminating access is immediately reduced from its current level of approximately 10 cents per minute to the current interstate level of 4 cents per minute to remain at that level throughout the four year transition. For originating access, the transition schedule is:

1993-12 cents

1994-10 cents

1995-10 cents

1996-8 cents

The Stipulation's transition schedules and structure for access rates have the following practical consequences. For serving larger business customers, who typically rely on special access for origination and switched access for termination, IXC access charges will immediately be reduced to the current interstate level of 4 cents and remain there for four years. For residential customers and small business customers, who typically rely on switched access for both origination and termination, IXC access charges will be both reduced on a more gradual schedule, and will only be reduced over the same four year period to 12 cents which is still 50% above the current interstate rate (8 cents).

Based on the evidence in this case to date, the Commission believes the Stipulation does not sufficiently reduce current access charges either in terms of the absolute level of the charges or the pace of the reduction. Under the Stipulation's 16 cents per minute access rate for 1993, New Hampshire will only move from its current position of having the second highest access rate in the United States to having the third highest, with only modest improvement in positioning for 1994 and 1995 at 14 cents. At the end of the four year transition, New Hampshire access rates will remain above the majority of states and will remain 50% above interstate levels, assuming contrary to experience that either interstate access charges or other states' intrastate access charges, are not further reduced.

We believe that the proposed reductions are insufficient. Access charges above interstate levels threaten to deprive New Hampshire ratepayers of the reduced toll prices which have characterized competition in the interstate jurisdiction. Access charges should also be set at levels which will enhance New Hampshire's ability to maintain a telecommunications infrastructure that will attract new businesses to the State and will encourage existing businesses to remain here. Moving our access charges from the second highest levels in the nation to the fourth or fifth highest is inconsistent with this goal.

A low-cost, efficient, state of the art

telecommunications infrastructure is vital to New Hampshire's economy and its long run ability to create jobs and to compete in a regional, national and international marketplace. Telecommunications infrastructure is particularly important to a state like New Hampshire which depends heavily on its small business and service sector for job creation. Indeed, the service sector accounts for over half of the employment in the State, and small businesses account for virtually all new jobs in New Hampshire.

In the information driven economy of the future, we anticipate that telecommunications costs will be a significant part of the overall expenses of running many businesses. Low cost telecommunications services directly translate into lower operating costs for both large and small firms located in the State and thereby make it more attractive for firms to conduct business in the State. Thus, the availability of low cost telecommunications services is crucial for New Hampshire's efforts to attract and retain industry and jobs. To the extent that carrier access charges are inordinately high, particularly in relation to other states, ratepayers are unlikely to benefit fully from toll competition and New Hampshire's efforts to expand its business base will be compromised.

Based on the testimony to date, we find therefore that the Stipulation's provisions governing the absolute reduction in NET's access charges and the pace of reduction are contrary to the interests of New Hampshire and its ratepayers. The

Commission believes it in the public good that access rates for New Hampshire reach interstate levels. In the overall context of the settlement, we are willing to accept a four year transition period for the reduction of access charges, but we are prepared to accept the access charge schedules for NET, only if the following modifications are adopted:

a.

(1) Originating Non-800 access:

Year	As Stipulated	As Modified
1993	12 cents	12 cents
1994	10 cents	8 cents
1995	10 cents	4 cents
1996	8 cents	7/1/96 interstate rate

(2) Terminating Non-800 access:

Year	As Stipulated	As Modified
1993	4 cents	4 cents
1994	4 cents	4 cents
1995	4 cents	4 cents
1996	4 cents	7/1/96 interstate rate

(3) Total Non-800 access:

Year	As Stipulated	As Modified
1993	16 cents	16 cents
1994	14 cents	12 cents
1995	14 cents	8 cents
1996	12 cents	7/1/96 interstate rate

b.

(1) Originating 800 to WAL Access:

Year	As Stipulated	As Modified
1993	4 cents	4 cents
1994	4 cents	4 cents
1995	4 cents	4 cents
1996	4 cents	7/1/96 interstate rate

(2) Terminating 800 to WAL Access:

Year	As Stipulated	As Modified
1993	10 cents	10 cents
1994	9 cents	8 cents
1995	8 cents	6 cents
1996	6 cents	7/1/96 interstate rate

(3) Total 800 to WAL Access:

Year	As Stipulated	As Modified
1993	14 cents	14 cents
1994	13 cents	12 cents
1995	12 cents	10 cents
1996	10 cents	7/1/96 interstate rate

c.

(1) Originating 800 to Common Line Access

Year	As Stipulated	As Modified
1993	4 cents	4 cents
1994	4 cents	4 cents
1995	4 cents	4 cents
1996	4 cents	7/1/96 interstate rate

(2) Terminating 800 to Common Line Access

Year	As Stipulated	As Modified
1993	4 cents	4 cents
1994	4 cents	4 cents
1995	4 cents	4 cents
1996	4 cents	7/1/96 interstate rate

(3) Total 800 to Common Line Access

Year	As Stipulated	As Modified
1993	8 cents	8 cents
1994	8 cents	8 cents
1995	8 cents	8 cents
1996	8 cents	7/1/96 interstate rate

6. <u>ITC Access Charges</u>

The Stipulation also establishes access charges for the ITCs and provides for modest decreases from existing levels over a four year transition period. The Commission is prepared to approve the access charge schedules for the ITCs.

7. <u>10XXX Access Discounts (Feature Group A, B, & D Access Discounts)</u>

The Stipulation provides that 10XXX intrastate switched access will not receive any discount from the access rates contained in the Stipulation. During the litigation, the IXCs presented evidence showing that 10XXX access is a decidedly inferior form of access to the 1-Plus access which the LECs make available for their own toll customers. The IXCs argued that

the LECs should be required to discount 10XXX access to provide some incentive for the LECs to deploy 1-Plus access for all toll providers. The appropriateness of such a discount raises difficult questions and the Commission is satisfied to accept the resolution of the parties in the context of the stipulated settlement of this proceeding.

8. Late Payment Charges

The Stipulation authorizes the LECs to amend their intrastate tariffs to initiate a schedule of charges for late payment, but does not specify any level of interest charges to be applied as late payment charges. Late payment charges are beneficial not only because they have the effect of reducing the outstanding unpaid balances due to the LECs, but also because they result in cost causers bearing the burden of the costs related to untimely bill payment. We have found the adoption of late payment charges to be in the public good for other utilities. Re Ossipee Water Company, 66 NHPUC Rep. 134 (1981); Re Concord Natural Gas Corp., 65 NHPUC Rep. 630 (1980). Accordingly, the Commission finds that the Stipulation's authorization for the late payment charges is in the public interest. The Commission will open a rulemaking docket to determine the appropriate level of such charges for all utilities.

9. Unbundling and Presubscription

The Stipulation provides that the Commission will commence a workshop proceeding to consider the unbundling of NET's bottleneck network for purposes of costing and pricing. The workshop will consider and make recommendations on (a) the specific network elements to be identified for unbundling the network; (b) the appropriate costing methodology to be used; and (c) the specific pricing rules appropriate for the unbundled network elements and the bundled service offerings regulated by the Commission.

Under the Stipulation, the unbundling workshop will commence one year after approval of the Stipulation by the Commission, and to the extent that the parties and Staff are not able to reach agreement, these issues will be litigated before the Commission. The Stipulation further provides that the results of the workshop process, or any associated Commission order after hearing, will not be implemented sooner than July 1, 1996.

The Commission finds that the unbundling workshop is in the public interest as it will facilitate the further opening of NET's bottleneck control of exchange access facilities to competing providers of toll and information services. However, the Commission also finds that the public interest requires that the Commission retain the authority to determine the timing and implementation of its workshop proceedings and formal proceedings and its ability to move expeditiously. Accordingly,

the Commission will approve the Stipulation only if the parties amend Section X(6) to eliminate any restrictions on the Commission's authority to commence the unbundling workshop or to determine the date for implementation of any unbundling order resulting from the workshop or any related proceedings.

Relatedly, Section X(3) of the Stipulation incorporates by reference the procedural schedule for litigating the issue of intraLATA presubscription in accordance with the terms of the 1/17/92 Stipulation. Under this provision the Commission is restricted from commencing the presubscription docket until one year from the effective date of a permanent access tariff and required to issue a final order within one year of commencement of the docket. For the reasons described above, the Commission will approve the Stipulation only if the parties amend this provision to eliminate both the restriction on the Commission's authority to commence the presubscription docket and the requirement that the Commission's final order issue within one year of the commencement of the docket.

10. Elimination of LEC Toll Pool

The Stipulation eliminates the existing LEC pool for the division of toll revenues between NET and the ITCs for the statewide joint provisioning of toll services and replaces it with new access charge arrangements between NET and each ITC. The Stipulation provides the ITCs with optional transitional mechanisms as the ITCs convert from jointly providing toll to

providing access, but the ITCs have all selected NET to be their designated toll carrier. The ITCs retain authority to provide toll services if they so elect. The Commission finds Section VI(A) of the Stipulation to be in the public interest.

11. Reporting and Monitoring

The parties have adopted detailed reporting requirements for the LECs and IXCs to provide information to assist the Commission and its Staff to monitor the state of competition in toll services in New Hampshire. We recognize that these reports, along with the additional information on MTS B, will provide the Commission with important information to evaluate the impact of competition under the terms of the Stipulation. We are concerned about the level of detail required and urge the parties to re-examine the reporting structure to assure that all of the information is actually required to perform the desired analysis.

Based on the data reported, the Staff will prepare a report on competition. At the end of the trial period, all parties may comment on any relevant competitive issue. The Commission finds that the Stipulation's reporting and monitoring provisions will promote the public good.

F. CONCLUSION

Although the Commission finds it in the public interest to accept the Stipulation only with the modifications specified

in this Report, we believe the parties' ability to reach agreement on the sharply disputed issues involved in this proceeding is a significant achievement. We applaud the spirit of hard work, dedication, and willingness to compromise which must have accompanied this effort. We believe that the Stipulation, with the modifications we propose, presents a sound framework for intrastate toll competition to evolve in New Hampshire through the two year experiment and, if appropriate, into the future. The Stipulation represents an important evolution in bringing the benefits of competition to New Hampshire and its ratepayers. We also recognize that the modifications proposed by the Commission although modest in number may be significant and may be contrary to the interests of one or more of the parties. Nonetheless, we find that public good requires such modifications if intraLATA competition is to truly benefit New Hampshire and its ratepayers.

We appreciate the parties' position that the Stipulation contains terms that are interdependent and each provision was necessary to reach final settlement. The Commission recognizes that each party has reserved the right to renew the litigation as if no settlement had been reached if that party determines that any Commission modifications are unacceptable. Should any party elect to resume the hearings on this basis, the Commission fully respects their right to do so. In the event that the parties, or any one of them, cannot accept these modifications, the Commission will resume the hearings in

this proceeding within 45 days of the date of the order. The Commission requests each of the parties to notify the Commission on or before June 25, 1993 whether such party has elected to accept the Commission's modifications or whether it elects to resume the hearings. If the hearings are resumed the Commission is prepared to reach a final decision as soon as possible after the closing of the record.

Our order will issue accordingly.

Concurring: June 10, 1993

Douglas L. Patch	Bruce B. Ellsworth	Linda G. Stevens
Chairman	Commissioner	Commissioner

DE 90-002

GENERIC INVESTIGATION INTO INTRALATA TOLL COMPETITION
ACCESS RATES

Order Conditionally Accepting the Stipulation of the Parties

..oo..

O R D E R N O. 20,864

Upon consideration of the foregoing Report, which is made a part hereof; it is hereby

ORDERED, that the Stipulation and Agreement Between the Parties of March 16, 1993 be, and hereby is, approved subject to the modifications specified in the Report; and it is

FURTHER ORDERED, that the parties notify the Commission on or before June 25, 1993 whether such party has elected to accept the Commission's modifications or whether it elects to resume the hearings.

By order of the New Hampshire Public Utilities Commission this tenth day of June, 1993.

Douglas L. Patch
Chairman

Bruce B. Ellsworth
Commissioner

Linda G. Stevens
Commissioner

Attested by:

Wynn E. Arnold
Executive Director & Secretary

08/11/93 08:11 ☎603 641 1878 NET-PACC

Regulators' Plan Upsets New England Telephone

PUC Would Cut Charges to Other Companies for In-State Long-Distance Network Access by 60%

From AP and Staff Reports

CONCORD — State regulators yesterday aimed for greater competition in the in-state toll-call market that they hope will lead to lower telephone rates in New Hampshire.

But New England Telephone, which regulators say must sign off on the plan, is in the words of one executive "very disappointed" and predicting consumers could face higher rates down the road or lose out on new technology.

The Public Utilities Commission proposed to cut by 60 percent what New England Telephone can charge other companies for network access when they handle in-state long-distance calls.

"It's a much more severe reduction in the access charges that can be charged by New England Telephone to in-state long-distance competitors for use of its facilities," said Executive Director Wynn Arnold.

New England Telephone officials are unhappy over the decision and studying options. "Based on our preliminary review, we're very disappointed," said Michael McCluskey, NET's vice president for New Hampshire.

McCluskey characterized the commission's action as "very unusual in a regulatory case," saying commissioners revised an agreement supported by NET, independent phone companies, long-distance carriers, the PUC's own staff and the consumer advocate. "Usually you think it's good policy when all the parties can come to an agreement," he said.

While the PUC's plan may sound good because basic exchange rates would be capped for two years, rates could rise faster at the end of that time than they normally would, he said.

The agreement also could reduce NET's incentive to invest in new technology to benefit customers, according to McCluskey.

And while NET must reduce charges to long-distance carriers, there is no requirement for those carriers to [illegible]ng savings to customers, [illegible]ey said.

The comm[illegible] lowers the [illegible] than what was previously agreed to by NET, independent phone companies, long-distance carriers and the commission's own staff. All must agree to the plan.

The plan aims to increase competition by making it easier for carriers like MCI, Sprint, AT&T and Long Distance North to battle New England Telephone, which has a near-monopoly on in-state long-distance service.

The commission said in a statement it was promoting stronger competition to support business development, stimulate job growth and economic recovery.

Commission staff attorney Chip Sullivan said the plan would have no immediate effect on average residential telephone customers.

"We're doing what we can to provide an environment where competition can exist and lower everybody's rates for toll calls," said Sullivan. "We can create an atmosphere where it can exist, but we can't force it to happen."

The in-state telephone competition that exists in New Hampshire now affects only "large-volume" customers such as the state or big businesses, he said, and the new plan could promote more competition for medium and smaller businesses.

"The question is whether it will go down to the residential level," where the fewest in-state toll calls are made, Sullivan said.

The modified agreement schedules access rates to decrease by 60 percent over four years. The original plan called for a 40 percent decrease.

Access rates would fall to 16 cents in 1993, 12 cents the following year, eight cents the third year and in the fourth year would equal the interstate rate in effect at the time, which is now just under eight cents per minute.

Under other parts of the proposal, New England Telephone, which serves 95 percent of New Hampshire's telephone customers, would:

- Get the right to change interest on overdue bills.
- Agree not to raise rates for local telephone service for two years except in specified circumstances beyond its control.
- Agree not to raise its in-state long distance rates, though it could lower them.

People who don't have New England Telephone for in-state long-distance calls are customers of the 12 independent phone companies around the state. They handle such calls in partnership with New England Telephone.

0517

DE 90-002

GENERIC INVESTIGATION INTO INTRALATA TOLL COMPETITION ACCESS RATES

Report and Order Accepting the Modified Stipulation Agreement

..00..

Appearances: As previously noted.

REPORT

I. Introduction.

On June 3, 1993, the Commission issued Report and Order No. 20,864 (Order) approving a settlement agreement setting out, inter alia, the transition to intrastate toll competition in New Hampshire and a schedule of access rates to be paid to the Local Exchange Companies entered into by Staff and the parties to this proceeding. However, the Order approving the agreement was conditioned on certain modifications necessary to protect the public interest based on the record of the proceeding to date.

The Order provided that any signatory to the Stipulation and Agreement could object to the modifications and hearings would resume in this proceeding to complete the record. All of the signatories accepted the conditions. However, New England Telephone and Telegraph Company (NET) sought to reserve certain rights detailed in a letter dated July 7, 1993.

NET sought to reserve the right to request review of the continued appropriateness of the modified access schedule.

At the duly noticed Commission meeting held on

July 19, 1993, we orally indicated our acquiescence to these conditions and asked the signatories to resubmit the Stipulation and Agreement to reflect both the Commission's and NET's modifications. On July 29, the signatories resubmitted the Modified Stipulation and Agreement. See, Attachment A.

II. Commission Analysis.

We have reviewed the Modified Stipulation and Agreement and find it reflects the aforementioned modifications and is in the public good. The Modified Stipulation and Agreement is, therefore, approved and shall govern New Hampshire's transition from a monopoly to a competitive intrastate toll market. However, we retain jurisdiction over this matter to ensure the emergence of a competitive intrastate toll market and the public good.

Our order will issue accordingly.

Concurring: August 2 , 1993

Douglas L. Patch	Bruce B. Ellsworth	Linda G. Stevens
Chairman	Commissioner	Commissioner

DE 90-002

GENERIC INVESTIGATION INTO INTRALATA TOLL COMPETITION ACCESS RATES

Order Accepting the Modified Stipulation and Agreement

..00..

O R D E R N O. 20,916

Upon consideration of the foregoing Report, which is made a part hereof; it is hereby

ORDERED, that the Modified Stipulation and Agreement Between the Parties of July 29, 1993, appended hereto as Attachment A is approved.

By order of the New Hampshire Public Utilities Commission this second day of August, 1993.

Douglas L. Patch	Bruce B. Ellsworth	Linda G. Stevens
Chairman	Commissioner	Commissioner

Attested by:

Wynn E. Arnold
Executive Director & Secretary

0521

VDD
AER
BOB
LR
file

DE 90-002

GENERIC INVESTIGATION INTO INTRALATA TOLL COMPETITION
ACCESS RATES

Order Authorizing Access Rates
For All New Hampshire Local Exchange Carriers

ORDER NO. 20,980

On June 3, 1993, the Commission issued Report and Order No. 20,864 (Order) approving a settlement agreement setting out, inter alia, the transition to intrastate toll competition in New Hampshire and a schedule of access rates to be paid to the Local Exchange Companies entered into by Staff and the parties to this proceeding. However, the Order approving the agreement was conditioned on certain modifications necessary to protect the public interest based on the record of the proceeding to date.

WHEREAS, all of the signatories accepted the modifications required for Commission approval; and

WHEREAS, on August 2, 1993 the Commission issued Report and Order No. 20,916 approving the Modified Stipulation and Agreement Between the Parties of July 29, 1993; and

WHEREAS, Staff has reviewed the tariff filings of the Local Exchange Carriers for compliance with the above Orders; and

WHEREAS, Staff has determined that New England Telephone Company (NET) NHPUC Tariff No. 78, as revised, complies with Order No. 20,864, and

WHEREAS, Staff has identified two minor areas in NET's tariff which do not comply with the New Hampshire Administrative

Code (N.H. Admin. Rules), to wit, Puc 403.04 (b) and 403.06 (b) 2.d; and

WHEREAS, many of the proposed tariff pages submitted by the Independent Local Exchange Carriers (Independents) require substantial revision to comply with our prior Orders; and

WHEREAS, Bretton Woods Telephone, Dixville Telephone, Dunbarton Telephone Company, Granite State Telephone, Inc., Merrimack County Telephone Company and Wilton Telephone Company have included an information surcharge in the switched access rate which raises the switched access rate per minute above the rate agreed to in the Modified Stipulation Agreement; it is hereby

ORDERED, that NET's Tariff No. 78, as revised, complies with Order No. 20,864 in all but two minor respects and will be approved upon resolution of those issued; and it is

FURTHER ORDERED, that NET refile tariff pages in compliance with the N.H. Admin. Rules Puc 403.04 (b) and 403.06 (b) 2.d cited above or, in the alternative, request a waiver of those rules; and it is

FURTHER ORDERED, that the rates in the tariff pages of Chichester Telephone Company, Kearsarge Telephone Company, Meriden Telephone Company and Union Telephone Company submitted on September 3, 1993 and the rates in the tariff pages of GTE submitted September 3, and September 24, 1993, shall be effective October 1, 1993; and it is

FURTHER ORDERED, that Bretton Woods Telephone, Dixville Telephone, Dunbarton Telephone Company, Granite State Telephone, Inc., Merrimack County Telephone Company and Wilton Telephone Company delete reference to rates for an information surcharge contained in tariff pages detailing the switched access rates provided to Staff by facsimile on September 24, 1993, and that the rates, excluding the information surcharge, provided on September 24, 1993, shall be effective October 1, 1993; and it is

FURTHER ORDERED, that if any of the Independents wish to include an information surcharge in the intrastate access tariff that a revised tariff page be submitted to the Commission in accordance with the N.H. Admin. Rules so that a docket may be opened to properly address the issue; and it is

FURTHER ORDERED, that Staff work with NET and the Independents to assure that revisions to the proposed tariffs required for compliance are completed.

By order of the New Hampshire Public Utilities Commission this twenty-seventh day of September, 1993.

Douglas L. Patch	Bruce B. Ellsworth	Linda G. Stevens
Chairman	Commissioner	Commissioner

Attested by:

Wynn E. Arnold
Executive Director & Secretary

DT 00-223

Investigation as to Whether Certain Calls are Local

DT 00-054

Independent Telephone Companies and Competitive Local Exchange Carriers - Local Calling Areas

Final Order

O R D E R N O. 24,080

October 28, 2002

APPEARANCES: Donald W. Boecke, Esq. for Verizon New Hampshire; Frederick J. Coolbroth, Esq. of Devine, Millimet & Branch, for Granite State Telephone, Inc., Merrimack County Telephone Company, Wilton Telephone Company, Inc., Hollis Telephone Company, Inc., Northland Telephone Company of Maine, Inc., Dunbarton Telephone Company, Inc., Bretton Woods Company, Inc., and Dixville Telephone Company; Joseph G. Donahue, Esq., for Union Telephone Company; Michael W. Fleming, Esq., for BayRing Communications; James Scheltema, Esq., for Global NAPs; Stacy Parker, Esq., for AT&T Broadband; Scott Sawyer, Esq., for Conversent Communications of New Hampshire, LLC; Cynthia Carney-Johnson, Esq., for WorldCom; Douglas S. Denny-Brown, Esq., for RNK Telecom; F. Anne Ross, Esq., of the Office of Consumer Advocate, for Residential Ratepayers of New Hampshire; and Lynmarie Cusack, Esq., for the Staff of the New Hampshire Public Utilities Commission.

I. PROCEDURAL HISTORY AND BACKGROUND

The New Hampshire Public Utilities Commission (Commission) opened this docket on October 6, 2000, to consolidate the investigation of the common issues related to local calling in New Hampshire raised in three separate dockets: DT 99-081/085 (*Internet Traffic Treated as Local Traffic Subject to Reciprocal Compensation*); DT 00-001 (*Implementation of Number*

specified NXX blocks, in such cases, is outweighed by the benefits achieved.

Current number assignments in use by ISPs may be converted to IANXX service over the next six months, with the transition to be completed by May 1, 2003. ISPs may have both their current numbers and their IANXX numbers in operation concurrently for a period of 60 days to facilitate the transition for their customers.

As for non-ISP bound traffic, it shall continue to be defined as local or toll by the physical location of end-users. NXX codes currently in use for non-ISP bound traffic will remain associated with particular geographic areas. Going forward, a CLEC may offer FX-like service for non-ISP bound traffic only when it is providing service to at least one customer physically located in the exchange from which the FX service is requested. For this purpose, the CLEC must be providing local dial tone via its own facilities, over an EEL arrangement or by using UNE loops. This requirement ensures that the use of VNXX will not grow disproportionately, in the manner predicted by Verizon, and that the requirement itself does not rise to the level of a barrier to entry. Carriers must certify to the Commission that use of a VNXX in any rate center comports with the requirement

of a physically-located customer. For VNXX blocks currently in use, carriers shall provide such certification before May 1, 2003. We direct Staff to develop the process for this certification, as well as for certifying future NXX block assignments and any ongoing changes in certification that may occur.

Effective May 1, 2003, all NXX blocks being used for VNXX, i.e., those NXX blocks that have not either been certified as FX-like or converted to IANXX, shall be rated to the rate center where the traffic is delivered under an irrebuttable presumption that the traffic is non-ISP traffic, except for traffic that originates in the same local calling area as the CLEC POI and exceeds the 3:1 ratio set out by the FCC in its *ISP Traffic Remand Order*. In the case of CLECs, all such codes shall be rated to the rate center where the POI is located. In crafting an overall approach to VNXX calls, we will not grandfather existing VNXX use. All carriers must abide by the system we here enunciate. Before obtaining new NXX blocks, carriers will be required to demonstrate readiness to serve customers physically located in a particular exchange, within six months of requesting the NXX blocks. Further, although CLEC local calling areas need not mirror the ILEC local calling

areas, reciprocal compensation or access charges for non-ISP traffic will be assessed in accordance with the ILEC local calling areas.

Our approach to VNXX calls will affect companies like Global NAPs that provide numbering resources to internet facsimile companies (fax by e-mail) and have no customers physically located in the state. Under our overall system, as long as such calls are permitted in New Hampshire, such calls will be toll calls unless they originate in the local calling area of the POI rate center where the calls are handed off to the CLEC. As determined in Order No. 23,454 in DT 00-001, Number Conservation Measures, 85 NH PUC 320 (2000), the issue of whether this use of numbering resources is in the public interest still remains. We will institute a full investigation of that issue, which has been awaiting the outcome of this docket.

Regarding transport costs charged to the ITCs by Verizon for delivery of CLEC-bound traffic, we recognize that both ITCs and CLECs have incentives not to negotiate TEAs that would determine responsibility for those transport charges. Therefore, we direct that those transport costs, in the absence of a TEA, shall be handled as follows. For traffic exchanged

FURTHER ORDERED, that during the transition carriers may provide ISPs with service via both old and new numbers concurrently for a period of up to 60 days; and it is

FURTHER ORDERED, that CLECs may offer FX-like service for non-ISP bound traffic only where they have at least one customer physically located in the exchange from which the FX-like service is requested; and it is

FURTHER ORDERED, that CLECs must certify to the Commission their eligibility for providing FX-like service for non-ISP bound traffic by May 1, 2003; and it is

FURTHER ORDERED, that Staff will develop procedures for the certification of CLEC exchanges eligible to use FX-like service; and it is

FURTHER ORDERED, that effective June 1, 2003, all uncertified CLEC VNXX codes shall be rated to the CLEC Point of Interconnection; and it is

FURTHER ORDERED, that before obtaining new NXX blocks, carriers shall be required to demonstrate readiness to serve, within 6 months, customers physically located in the requested exchange; and it is

FURTHER ORDERED, that reciprocal compensation or access charges shall be due for non-ISP bound traffic in

accordance with the ILEC local calling areas; and it is

FURTHER ORDERED, that each ITC shall bear the cost of the transport and tandem transit for traffic exchanged with any CLEC, until such traffic exceeds 5000 minutes per month; and it is

FURTHER ORDERED, that each ITC shall share the transport and tandem transit costs equally for all traffic exchanged with any CLEC, once such traffic exceeds 5000 minutes per month, unless and until the CLEC and the ITC reach agreement on a Traffic Exchange Agreement; and it is

FURTHER ORDERED, that the Commission Staff shall work with ITC and CLEC representatives to draft a model Traffic Exchange Agreement.

By order of the Public Utilities Commission of New Hampshire this twenty-eighth day of October, 2002.

Thomas B. Getz Chairman	Susan S. Geiger Commissioner	Nancy Brockway Commissioner

Attested by:

Adele E. Leighton
Assistant to the Executive Director

FCC 96-325

Before the
Federal Communications Commission
Washington, DC 20554

In the Matter of	)	
	)	
Implementation of the Local Competition Provisions in the Telecommunications Act of 1996	)	CC Docket No. 96-98
	)	
Interconnection between Local Exchange Carriers and Commercial Mobile Radio Service Providers	)	CC Docket No. 95-185
	)	

FIRST REPORT AND ORDER

Adopted: August 1, 1996 Released: August 8, 1996

By the Commission: Chairman Hundt and Commissioners Quello, Ness, and Chong issuing separate statements.

Table of Contents

I. INTRODUCTION, OVERVIEW, AND EXECUTIVE SUMMARY 1
- A. The Telecommunications Act of 1996 - A New Direction 1
- B. The Competition Trilogy: Section 251, Universal Service Reform and Access Charge Reform 6
- C. Economic Barriers 10
- D. Operational Barriers 16
- E. Transition 21
- F. Executive Summary 24

II. SCOPE OF THE COMMISSION'S RULES 41
- A. Advantages and Disadvantages of National Rules 44
- B. Suggested Approaches for FCC Rules 63

c. **Discussion**

(1) **Distinction between "Transport and Termination" and Access**

1033. We recognize that transport and termination of traffic, whether it originates locally or from a distant exchange, involves the same network functions. Ultimately, we believe that the rates that local carriers impose for the transport and termination of local traffic and for the transport and termination of long distance traffic should converge. We conclude, however, as a legal matter, that transport and termination of local traffic are different services than access service for long distance telecommunications. Transport and termination of local traffic for purposes of reciprocal compensation are governed by sections 251(b)(5) and 252(d)(2), while access charges for interstate long-distance traffic are governed by sections 201 and 202 of the Act. The Act preserves the legal distinctions between charges for transport and termination of local traffic and interstate and intrastate charges for terminating long-distance traffic.

1034. We conclude that section 251(b)(5) reciprocal compensation obligations should apply only to traffic that originates and terminates within a local area, as defined in the following paragraph. We disagree with Frontier's contention that section 251(b)(5) entitles an IXC to receive reciprocal compensation from a LEC when a long-distance call is passed from the LEC serving the caller to the IXC. Access charges were developed to address a situation in which three carriers -- typically, the originating LEC, the IXC, and the terminating LEC -- collaborate to complete a long-distance call. As a general matter, in the access charge regime, the long-distance caller pays long-distance charges to the IXC, and the IXC must pay both LECs for originating and terminating access service.[2474] By contrast, reciprocal compensation for transport and termination of calls is intended for a situation in which two carriers collaborate to complete a local call. In this case, the local caller pays charges to the originating carrier, and the originating carrier must compensate the terminating carrier for completing the call. This reading of the statute is confirmed by section 252(d)(2)(A)(i), which establishes the pricing standards for section 251(b)(5). Section 251(d)(2)(A)(i) provides for "recovery by each carrier of costs associated with the transport and termination on each carrier's network facilities of calls that originate on the network facilities of the other carrier."[2475] We note that our conclusion that long distance traffic is not subject to the transport and termination provisions of section 251 does not in any way disrupt the ability of IXCs to terminate their interstate long-distance traffic on LEC networks. Pursuant to section 251(g), LECs must continue to offer tariffed interstate access services just as they did prior to enactment of the 1996 Act. We find that the reciprocal compensation provisions of section 251(b)(5) for transport and termination of traffic do not apply to the transport or termination of interstate or intrastate interexchange traffic.

[2474] In addition, both the caller and the party receiving the call pay a flat-rated interstate access charge -- the end-user common line charge -- to the respective incumbent LEC to whose network each of these parties is connected.

[2475] 47 U.S.C. § 252(d)(2)(A)(i).

1035. With the exception of traffic to or from a CMRS network, state commissions have the authority to determine what geographic areas should be considered "local areas" for the purpose of applying reciprocal compensation obligations under section 251(b)(5), consistent with the state commissions' historical practice of defining local service areas for wireline LECs. Traffic originating or terminating outside of the applicable local area would be subject to interstate and intrastate access charges. We expect the states to determine whether intrastate transport and termination of traffic between competing LECs, where a portion of their local service areas are not the same, should be governed by section 251(b)(5)'s reciprocal compensation obligations or whether intrastate access charges should apply to the portions of their local service areas that are different. This approach is consistent with a recently negotiated interconnection agreement between Ameritech and ICG that restricted reciprocal compensation arrangements to the local traffic area as defined by the state commission.[2476] Continental Cablevision, in an *ex parte* letter, states that many incumbent LECs offer optional expanded local area calling plans, in which customers may pay an additional flat rate charge for calls within a wider area than that deemed as local, but that terminating intrastate access charges typically apply to calls that originate from competing carriers in the same wider area.[2477] Continental Cablevision argues that local transport and termination rates should apply to these calls. We lack sufficient record information to address the issue of expanded local area calling plans; we expect that this issue will be considered, in the first instance, by state commissions. In addition, we expect the states to decide whether section 251(b)(5) reciprocal compensation provisions apply to the exchange of traffic between incumbent LECs that serve adjacent service areas.

1036. On the other hand, in light of this Commission's exclusive authority to define the authorized license areas of wireless carriers, we will define the local service area for calls to or from a CMRS network for the purposes of applying reciprocal compensation obligations under section 251(b)(5).[2478] Different types of wireless carriers have different FCC-authorized licensed territories, the largest of which is the "Major Trading Area" (MTA).[2479] Because wireless licensed territories are federally authorized, and vary in size, we conclude that the largest FCC-authorized wireless license territory (*i.e.*, MTA) serves as the most appropriate definition for local service area for CMRS traffic for purposes of reciprocal compensation under section 251(b)(5) as it avoids creating artificial distinctions between CMRS providers. Accordingly,

---

[2476] *See* letter from Albert H. Kramer, Dickstein, Shapiro, Morin & Oshinsky LLP to John Nakahata, Senior Legal Advisor to the Chairman, FCC, July 11, 1996.

[2477] Letter from Brenda L. Fox, Vice President, Federal Relations, Continental Cablevision, to Robert Pepper, Chief, Office of Plans and Policy, FCC, July 22, 1996, attached to Letter from Donna N. Lampert, Mintz, Levin, Cohn, Ferris, Glovsky and Popeo, P.C., to William F. Caton, Acting Secretary, FCC, July 22, 1996.

[2478] *See also infra*, Section XI.A.c.3.

[2479] *See* Rand McNally, Inc., *1992 Commercial Atlas & Marketing Guide* 88-39 (1992).

STATE OF NEW YORK
PUBLIC SERVICE COMMISSION

At a session of the Public Service Commission held in the City of Albany on May 17, 2006

COMMISSIONERS PRESENT:

William M. Flynn, Chairman
Thomas J. Dunleavy
Leonard A. Weiss
Neal N. Galvin
Patricia L. Acampora

CASE 04-C-1548 - Complaint of WilTel Communications, LLC Against Verizon New York Inc. Concerning Access Charges Under Verizon Tariff No. 11.

ORDER DENYING
WILTEL COMMUNICATIONS, LLC'S COMPLAINT

(Issued and Effective May 30, 2006)

BY THE COMMISSION:

INTRODUCTION

In a complaint against Verizon New York Inc. (Verizon), WilTel Communications, LLC (WilTel) requests that the Commission prohibit Verizon from imposing unlawful access charges and require Verizon to amend its PSC Tariff No. 11 to bring it into compliance with the rules and regulations of this Commission and the Federal Communications Commission (FCC). WilTel complains that it is inappropriate for Verizon to charge carrier common line (CCL) and local switching rates for intrastate calls originated by WilTel, but carried by Verizon for termination at radio telephone utilities (RTU).[1] Verizon argues that the existing tariff provision that allows such

[1] The acronym "RTU" means "radio telephone utilities", which Tariff No. 11 defines as radio common carriers and cellular carriers.

charges is appropriate and urges the Commission to reject WilTel's demands and dismiss its complaint.

We find that for intrastate calls terminated to an RTU, it is appropriate for Verizon to be compensated pursuant to the tariff language because the rate is consistent with the balance struck in Opinion No. 98-10 and the tariff is being applied properly. Therefore, WilTel's complaint is dismissed.

PLEADINGS

On December 6, 2004, WilTel filed a complaint against Verizon requesting that the Commission prohibit Verizon from imposing unlawful access charges upon WilTel and requiring Verizon to amend PSC Tariff No. 11 to bring it into compliance with the rules and regulations of the Commission and the FCC.[2] WilTel further requests that Verizon be ordered to credit WilTel for disputed charges imposed by Verizon under its tariff.

WilTel claims that, in some instances, its New York intrastate traffic is terminated to a wireless carrier's network over facilities owned by the wireless carrier's rather than Verizon's network. WilTel argues that even though Verizon does

[2] WilTel is an interexchange carrier (IXC) purchasing switched exchange access service from Verizon, an incumbent local exchange carrier (ILEC), in order to terminate intrastate telephone calls to customers in New York.

not provide the local switching or CCL service[3] in such instances, Verizon, nevertheless, bills WilTel for such services and has done so since November 10, 2002 pursuant to PSC Tariff No. 11 - Access Service. WilTel claims that the existing tariff language which allows such charges is flawed and should be modified. Specifically, WilTel disputes section 2.4.8, which states:

> When Switched Access Service involves intrastate traffic which originates or terminates at RTU Services, where the local transport is provided by the Telephone Company and the end user connection is provided by an RTU Carrier, the Telephone Company will provide its portion of the Switched Access Service in accordance with Section 6 following.
>
> For traffic which originates or terminates at RTU Interconnections, Carrier Common Line Service and Switched Access Service Local Switching rates and charges as specified in Sections 3.9 and 6.8 following respectively, will apply.

WilTel asserts that both state and federal law support its claim that Verizon is prohibited from charging WilTel access charges for wireless services. According to WilTel, the FCC has sole jurisdiction over the rates charged by wireless carriers and wireless carriers are not entitled to compensation from an IXC for access charges unless a contract exists between the two parties that specifically require the IXC to compensate the

---

[3] Carrier Common Line (CCL) access provides for the use of telephone company common lines by customers for access to end users to furnish customer intrastate communications. CCL is the charge that IXCs pay to LECs to connect to the end user through LEC local loop facilities. The local switching rate category provides the local end office switching and end user termination functions necessary to complete the transmission of Switched Access communications to and from the end users by the local end office.

wireless carrier.[4] Further, WilTel argues that recent FCC rules prohibit LECs from assessing access charges on behalf of wireless carriers.[5] In contrast, WilTel does not dispute the imposition of transport and tandem switching charges, as Verizon clearly provides those services, pursuant to tariff, when an intrastate call is terminated by an RTU carrier. WilTel also argues that, consistent with Section 91 of the Public Service Law (PSL), Verizon may only assess charges that are just and reasonable and is prohibited from demanding compensation for a service it does not actually perform.

Verizon argues that Section 2.4.8, which has been in effect since 1998, allows it to impose access charges in any situation where it handles intrastate traffic that is terminated to a wireless carrier's end user in New York, whether Verizon provides the local switching component or not, by virtue of the filed rate doctrine. Verizon rebuts WilTel's argument that the FCC prohibits it from charging for local switching when a wireless carrier terminates the call. First, Verizon argues that the FCC's ruling applied only to interstate traffic, while the charges that are the subject of WilTel's complaint apply only to intrastate traffic. Second, Verizon claims that the wireless carrier attempting to impose a payment obligation in the FCC's Sprint/AT&T Declaratory Ruling had no tariff permitting it to do so. Verizon claims that in the ruling, the

---

[4] Petitions of Sprint PCS and AT&T Corp. for Declaratory Ruling Regarding CMRS Access Charges, WT Docket No. 01-316, Declaratory Ruling, 17 FCC Rcd. 13192 (2002) ("Sprint/AT&T Declaratory Ruling"), petitions for review dismissed, AT&T Corp. v. FCC, 349 F.3d 692 (D.C. Cir. 2003).

[5] In the Matter of Access Charge Reform; Reform of Access Charges Imposed by Competitive Local Exchange Carriers, CC Docket No. 96-262, Eighth Report and Order and Fifth Order on Reconsideration, 19 FCC Rcd. 9108, para. 16 (2004) (the "CLEC Access Reform Order").

FCC noted that a tariff, even without a contract, would permit a carrier to impose such a charge.[6] Third, the Sprint/AT&T Declaratory Ruling is not applicable because it applies only to a wireless carrier's ability to impose such charges, and Verizon is not a wireless carrier. Lastly, Verizon claims that the CLEC Access Reform Order should not apply here because it applies only to interstate traffic and the charges in dispute here are not part of any joint billing arrangement with a wireless carrier.

In a subsequent filing, Verizon further argues that Section 2.4.8 of the Switched Access tariff was approved pursuant to a 1998 rate proceeding,[7] and that nothing has occurred since that proceeding to justify a rate change. Verizon argues that application of section 2.4.8 complies with overall rate level mandated in Opinion No. 98-10. Verizon claims that modifications to that section of the tariff cannot be looked at in isolation, but only in the context of overall switched access revenues and any rate changes by the Commission should be subject to a full hearing. Verizon further claims that the change in rate structure being sought by WilTel, absent any other changes, will reduce Verizon's overall switched access revenues by approximately $40 million annually. Verizon argues that reductions to switched access rates are less appropriate now than they were in 1998 and that the Commission must consider

---

[6] Sprint/AT&T Declaratory Ruling, para. 8, noting that "[t]here are three ways in which a carrier seeking to impose charges on another carrier can establish a duty to pay such charges pursuant to (1) [FCC] rule; (2) tariff; or (3) contract."

[7] Cases 28425 and 94-C-0095, Opinion and Order Establishing Access charges for New York Telephone Company and Instituting a Targeted Accessibility Fund (issued June 2, 1998)(Opinion No. 98-10).

Verizon's financial health when determining rate changes that could potentially cause revenue loss.

WilTel disagrees with Verizon's additional filing. It argues that Verizon seeks to obfuscate the issues in its complaint by introducing a 1998 Commission Opinion on intrastate access charges. However, WilTtel submits that the Commission's Opinion in fact supports WilTel's argument here. In Opinion No. 98-10, WilTel contends, the Commission found that access charges apply to only services actually provided by Verizon over its network. Therefore, Verizon cannot charge for services it does not provide. Moreover, WilTel argues that even if the Commission finds that Verizon's tariff allows it to charge for services it does not provide, the CCL charge should not apply because Verizon's tariff incorrectly refers to a rate that does not exist in the tariff. Verizon's response, that it was a typographical error, according to WilTel, is inadequate. WilTel submits that Verizon should not be allowed to go outside the tariff to impose a rate that is not clearly set forth in the tariff.

Finally, WilTel argues that Verizon's application of the tariff is not equal in that when access charges paid by Verizon Long Distance accrue to another Verizon company, costs incurred by the long distance carrier are offset by revenues from other Verizon affiliates. Ultimately, WilTel asserts that because the rate at issue here is unjust and unreasonable, the Commission must order Verizon to withdraw it from its tariff. At that time, WilTel submits, Verizon can seek a tariff change to increase other rates to account for lost revenues.

DISCUSSION

Based on the pleadings from both parties regarding Verizon's recovery of costs when a wireless carrier terminates an intrastate call, we find that Verizon's charges are

consistent with our prior determination in Opinion No. 98-10 and the tariff language is clear and unambiguous.

When Verizon terminates an intrastate call to a Verizon end-user, traffic is delivered by the IXC to the access tandem, and Verizon utilizes all three components of switched access service to complete the call. Intrastate calls from an IXC to an entity other than Verizon are also routed through the Verizon access tandem, however, the terminating carrier is responsible for delivery of the traffic thereafter. Wireless carriers interconnect with Verizon at the access tandem office (Type 2A Interconnection) or at a Verizon end office (Type 2B Interconnection).

The fundamental issues in this case involve whether Verizon's tariffed rate assessed to the IXC for handling traffic that terminates at a wireless RTU is just and reasonable and being applied properly.

Initially, with regard to whether the charge is just and reasonable, Verizon correctly points out that the subject charge was approved pursuant to Opinion No. 98-10. That proceeding ordered Verizon to reduce overall Switched Access revenues by approximately $85 million in a manner consistent with a rate design ordered by the Commission. The charge at issue here was developed pursuant to that overall rate design and instituted during the compliance phase of that proceeding. Nothing in the record here demonstrates that the rates were not properly implemented consistent with Opinion 98-10. WilTel simply asserts that Verizon cannot charge for a service it does not perform. WilTel's complaint amounts to a collateral attack on that rate design. WilTel does not provide any support that the rate design developed pursuant to Opinion No. 98-10 fails to comply with the Public Service Law in some material aspect. Because we conclude that the rate at issue complies with Opinion

No. 98-10, granting WilTel's request would require that we alter the balance that was established there, which we decline to do.

Thus, WilTel's complaint turns on whether the tariff language is clear and unambiguous and being properly applied. Based on the plain reading of the language in the tariff, Section 2.4.8 allows Verizon to charge the disputed rate when switched access service involves intrastate traffic that terminates at a wireless RTU where the local transport is provided by Verizon. Nothing in the tariff language assumes that Verizon performs all of the stated functions including the CCL and local switching. The tariff simply implements the rate design ordered by the Commission in Opinion No.98-10. The language of the tariff is, therefore, clear and unambiguous and is being applied properly consistent with Opinion No. 98-10.

We also find that WilTel's reliance on the FCC's rulings is not dispositive here because those rulings involved interstate services that may only have been applicable to competitive LECs and not ILECs. At the time they became effective, those rulings were not grounds for Verizon to change its intrastate Access Service tariff.

WilTel's assertion that the rate is misplaced in the tariff due to a typographical error is also unpersuasive. A review of the tariff language at issue would allow a customer to ascertain the applicable rate despite the alleged error.

Finally, as to WilTel's complaint regarding past bill credits, because we find Verizon's rate to be in compliance with the PSL, that aspect of WilTel's complaint is also denied.

CONCLUSION

Based on the foregoing, we deny WilTel Communications, LLC's complaint against Verizon New York Inc.

The Commission orders:

1. WilTel Communications, LLC's complaint is denied.
2. This proceeding is closed.

By the Commission,

(SIGNED) JACLYN A. BRILLING
Secretary

EXHIBIT III

NH PUC DOCKET DE 90-002

REFERENCED TESTIMONY EXCERPTS CONSISTING OF:

Michael McCluskey	May 1, 1992	Direct (pp. 12-13)
Dr. William Taylor	May 1, 1992	Direct (p. 4)
Peter Shepherd	May 1, 1992	Direct (p. 4-7)
Michael McCluskey	August 21, 1992	Rebuttal (p. 31-32)

Note: Paper copies only.

NEW ENGLAND TELEPHONE AND TELEGRAPH COMPANY

STATE OF NEW HAMPSHIRE

DOCKET 90-002

DIRECT TESTIMONY OF

MICHAEL J. McCLUSKEY

DIRECTOR - NORTHERN STATES REGULATORY

1 switched access rates. The result is a volume sensitive, time
2 of day sensitive switched access schedule which reflects the
3 same major structural components as the Company's retail
4 structure.
5 By proceeding in this fashion, the Company ensures that for
6 time-of day rates, the corresponding end-to-end switched
7 access rate results in a cost-based relationship with retail
8 toll prices. By adjusting the access rates for cost
9 differences only, any contribution contained in retail rates
10 is preserved in wholesale rates.
11 Q. Earlier in your testimony you said that the Company's proposal
12 for switched access would include local transport and local
switching rates which are set at their incremental costs.
14 Since toll rates today are much higher than their incremental
15 costs, how does the proposal succeed in creating an end-to-end
16 access rate which differs from retail rates only by
17 incremental cost and retail overhead?
18 A. In addition to the local transport and local switching
19 element, the Company is introducing originating and
20 terminating carrier common line elements which reflect
21 contribution. The sum of the cost-based local transport and
22 local switching rate elements which would apply on an end-to-
23 end basis would fall far below the retail rates, since the a
24 sum would contain no contribution beyond incremental cost.
25 The sole purpose of the carrier common line rate elements is

1 to bring the end-to-end access rate from the incremental costs
2 of transport and switching up to a level which results in the
3 proper relationship between toll and access.
4 In the currently effective New Hampshire access tariff,
5 contribution is loaded onto the local transport and local
6 switching rates rather than being contained in carrier common
7 line elements. Exhibit 3 of the attachment to my testimony
8 summarizes the present switched access rate structure in New
9 Hampshire. Carrier common line charges are found in the
10 interstate access tariff as well as the access tariffs of the
11 other New England states. The Company has learned that it is
12 useful to isolate the contribution contained in switched
access into separate rate elements, rather than to load
14 contribution onto the network-based transport and switching
15 elements as is currently the case in the New Hampshire rate
16 schedule. Isolation of the contribution element eases the
17 understanding of the Company's proposal and future rate
18 modifications. Mr. Shepherd's testimony provides more
19 information on the manner in which the carrier common line
20 rate levels were calculated.
21 Q. As you stated above, the Company's retail structure contains
22 a series of credits when higher volumes of usage are achieved.
23 Where will these credits be included in the switched access
24 schedule?
25 A. These credits will be applied against the originating carrier

NEW ENGLAND TELEPHONE AND TELEGRAPH COMPANY

STATE OF NEW HAMPSHIRE

DOCKET 90-002

DIRECT TESTIMONY OF

DR. WILLIAM E. TAYLOR

SENIOR VICE PRESIDENT OF

NATIONAL ECONOMIC RESEARCH ASSOCIATES

FCC's Report and Order "In the Matter of WATS-Related and Other Amendments of Part 69 of the Commission's Rules," CC Docket 86-1, released March 21, 1986, paragraph 54). On the other hand, it is more difficult to determine the jurisdiction of a terminating access minute, so that differences between the interstate and intrastate terminating switched access price create an incentive for jurisdictional arbitrage and misreporting.

In its proposal, NET recognizes its limited ability to extract contribution from large customer locations at the originating end of the call. It appears likely to me that jurisdictional arbitrage will eventually require that intrastate terminating access charges approach the level of interstate access rates.

Q. NET proposes to recover contribution from access charges through an originating and terminating carrier common line charge. Is there an economic rationale for this rate structure?

A. Yes. NET proposes to set the originating and terminating prices for access network elements (switching, transport, and line termination) at incremental cost. The required level of contribution from access charges will be obtained through originating and terminating carrier common line charges--which are effectively non-cost-based charges levied on all toll carriers for interconnecting with the NET network.

The advantage of isolating the required contribution into charges for interconnection (at the originating and terminating ends) is that it minimizes the distortion caused by pricing carrier access above incremental cost. Since each network element is priced at incremental cost, carriers can choose how much switching, line termination, and transport to purchase from NET (and how much to purchase elsewhere) based on NET's economic cost of providing those services. By choosing the number and locations of its points of presence, a toll carrier can currently affect the amount of NET network services it will purchase for intrastate toll services. Since carriers have flexibility to pick and choose which access services to purchase from NET and which to purchase elsewhere, it is important that those decisions be based on costs, not costs plus contribution.

Of course, NET cannot obtain an unlimited amount of contribution using this rate structure. If carriers have alternatives for network elements like switching or transport, they also have alternatives

access rate development process, and provides the foundation for my testimony.

NET'S PROPOSAL FOR SWITCHED ACCESS

Q. Please describe the switched access structure NET is proposing.

A. NET's proposal consists of two switched rate element categories. The first category comprises the network-based "traffic sensitive" elements of Local Transport and Local Switching. The second category is the Carrier Common Line element which is an element designed to provide contribution and establish the correct overall price relationship, based on the difference in cost to provide the retail versus wholesale service. Within Local Transport, NET proposes two rate elements. The first element, Local Transport-Termination, is designed to recover interoffice facility termination and tandem switching incremental costs and applies on a per minute basis. The second element, Local Transport-Facility, is designed to recover the line-haul incremental costs associated with interexchange transport and applies on a per minute per mile basis. The Local Switching category contains a single element, and recovers the incremental costs associated with switching carrier calls at the Company's end offices. The Local Switching element also includes access billing related costs. These network-based elements all apply on an originating and terminating basis.

The second category NET is proposing is the contribution element of Carrier Common Line, which is also established on an originating and terminating minute basis. In the currently effective New Hampshire intrastate access tariff, NHPUC-No. 78, contribution is included in the network-based elements and thus Carrier Common Line elements are not separately identified. As explained in Mr. McCluskey's and Dr. Taylor's testimonies, the Company believes it is more appropriate to isolate these contribution elements from the network elements, in order to establish the proper price signals to the market and facilitate the appropriate retail/wholesale linkage for any future transition of these retail and wholesale prices towards the overall level of their costs. This rate element structure is also consistent with the structures in the Company's interstate and intrastate access tariffs in the other states.

All of the non-800 Service switched access rates the Company is proposing will be price differentiated according to the time of day the call is made. The same rate periods which are already in place for NET's retail MTS offering, i.e., Day, Evening and Night/Weekend, are proposed for the intrastate switched access tariff in order to maintain the appropriate rate relationships. In addition, the originating Carrier Common Line rate during the Day period will also be differentiated based on the end user's volume. This volume

sensitivity will be achieved via the Common Line Usage Credit, as described by Mr. McCluskey.

Q. Would you explain how this proposed switched access structure differs from the existing intrastate access structure?

A. The proposed structure is similar to the existing structure in that the Local Transport and Local Switching categories are already included in the presently effective tariff. The contribution elements are not separately identified in the existing tariff and thus, as I explained above, this represents a change. Also, the concepts of time of day differentiated and volume sensitive intrastate access rates are also newly introduced with this filing. Finally, as explained by Mr. McCluskey, it is necessary at this time to introduce distinct rates for switched access associated with 800 Service. Although the same structural elements and rationale will apply to 800 Access Service, the rate levels themselves will be different in order to accomplish the appropriate alignment of wholesale and retail prices.

Q. How does this structure serve to advance the goals outlined by Mr. McCluskey?

A. As I will explain further in the testimony, the introduction of the Carrier Common Line elements will facilitate the establishment of a relationship between wholesale and retail prices, based on their costs, thereby encouraging economic efficiency. In addition, since the structure is similar to

that which is already contained in the interstate access tariff, it represents a consistent rate element structure which is understood by the carriers. Even those elements new to New Hampshire, such as time of day rate differentiation and the Common Line Usage Credit, are effective in other NET jurisdictions and thus should not raise significant administrative issues for carriers operating in those states. Attached to my testimony as Exhibit 1 is the Company's proposed illustrative access services tariff.

NET'S PROPOSAL FOR SWITCHED ACCESS RATES

Q. How were the rates associated with the network elements, Local Transport and Local Switching, established?

A. As Mr. McCluskey explained, the Company believes it is critical at the present time that the rates for these tangible, network-based rate elements be established at their incremental costs in order to send the appropriate economic price signals to the carriers. Thus, I have directly utilized the incremental costs for Switched Access developed from the approved New Hampshire Incremental Cost Study (ICS) to arrive at the rates for Local Transport-Termination, Local Transport-Facility, and Local Switching. Exhibit 2, Workpaper 5 displays the aggregation of the incremental cost elements to the switched access rate element level.

Q. Please describe specifically how you used these costs to develop the Local Transport and Local Switching rate elements.

NEW ENGLAND TELEPHONE AND TELEGRAPH COMPANY

STATE OF NEW HAMPSHIRE

DOCKET 90-002

REBUTTAL TESTIMONY OF

MICHAEL J. McCLUSKEY

DIRECTOR - NORTHERN STATES REGULATORY

Telecom argues that costs, from an LEC perspective, should be defined by the FCC Separations manual (Part 36) and that incremental costs should not be considered in setting rates for access services. What consideration should the Commission give to this notion with respect to the Company's proposal for the structure and level of access charges?

A. I agree with both Mr. Campbell and Mr. Roddy in that the LECs should be allowed the opportunity to recover the <u>overall</u> revenue requirement of the firm and that the authorization of competition and adoption of a permanent access charge should not detract from that essential business need. Therefore, the Commission must consider carefully the relationship between access and toll charges in rendering its decision and consider the impacts on total revenues and contribution across all services. The Commission has adopted a policy of employing incremental costs as the standard for rate making purposes (Order No. 20,082 in Docket DR 89-010/DR 85-182 at ordering clause page) in order to promote efficiency. Establishing prices based on embedded or fully allocated cost information, as suggested by Mr. Roddy, would not reflect the true costs for consumption or production decisions. As stated above, and in my and Dr. Taylor's direct testimonies, the Company's proposal for access charges is based on incremental cost information, and is designed to promote efficient resource allocation. In addition, the proposal is designed to provide equal levels of contribution based on incremental cost

differences whether a call utilizes an LECs toll service or a competitive carrier's service where the carrier is reselling its use of the LEC network to provide its service. Rates established on an embedded or fully allocated basis for each access rate element would not accomplish this important objective. Incorrect price signals would be sent to the market regarding the true cost of the rate elements. This may promote irrational behavior on the part of the competitive carriers to inefficiently establish points of presence in order to lower local transport charges and avoid the excess contribution loading resulting from the pricing distortion. For that reason, the Company's proposal to establish the traffic sensitive switched access rates at the level of incremental costs and recover contribution through a separate originating and terminating carrier common line rate element is more appropriate and will facilitate future transitions of toll and access rates in the direction of overall incremental costs in response to competitive market forces.

D <u>A CRITICAL ISSUE FOR THE COMMISSION IN ESTABLISHING TOLL AND ACCESS RATES IS TO ENSURE INDIVIDUAL COMPANY REVENUE REQUIREMENT IS REASONABLY ACHIEVED</u>

Q. Do you have any additional comments regarding Mr. Campbell's and Mr. Roddy's positions regarding revenue neutrality, costs,

EXHIBIT IV

NH PUC DOCKET DE 90-002

REFERENCED TRANSCRIPT EXCERPTS CONSISTING OF:

Day X	(pp. 199-200, 224-226, 230-232)
Day XII	(pp. 196-198, 202-214)
Day XIII	(pp. 12, 24-26, 169-171)
Day XIV	(pp 48-52, 74-82, 84-89, 98-106)
March 22, 1993	(pp. 19-20)

Note: Paper copies only.

1 central office.

2 Q Run that past me again.

3 A The co-location that we allow in New England

4 Telephone is we allow carriers to bring fiber into

5 our central office and place their termination

6 gear in our central office, in a physical -- in a

7 cage inside our central office. Now, the idea of

8 what I'm saying about them putting in a switch in

9 there is the part that's confusing.

10 Q Okay. What you call "co-location" then is

11 basically just elimination of this local transport

12 piece, where essentially the POP is, for all

13 practical purposes, located inside the central

14 office?

15 A Well, you haven't got the terminating facilities.

16 Q Alright. Well, let's try it this way, Mr.

17 McCluskey. How -- let's suppose an IXC is allowed

18 to co-locate inside an LEC central office, as NET

19 defines that term.

20 A Okay.

21 Q Would it be a fair statement that the IXC can

22 basically eliminate -- one of the advantages to

23 the IXC of co-location is that the IXC can

24 eliminate the local transport facilities cost?

1 A Yes. And I believe they may be able to eliminate
2 the termination, but I'm not sure about that. But
3 they certainly can do the transport, transport
4 piece.
5 Q Okay. And, as you say, they may also be able to
6 eliminate the local transport termination cost by
7 co-locating?
8 A I'm not sure about that, but it's possible.
9 Q Okay. Now, let's suppose we go one step further
10 and the IXC is allowed to put it's own switch in
11 the LEC central office. Would it be a fair
12 statement that the IXC could essentially eliminate
13 any of the costs of local switching that it would
14 have to pay the LEC?
15 A If they had their own switch, yes. I would think
16 they could, yes. In other words, if they just had
17 network access lines dedicated directly to their
18 switch and used co-located facilities to go to the
19 POP. Right. They would be, in theory, there
20 would be cost avoidance by our incremental cost of
21 transport and our incremental cost of switching,
22 which we think is consistent with the incremental
23 cost study.
24 Q So, in summary, co-location would essentially

1 permit an IXC to eliminate many of these
2 subcomponents of access?
3 a Certainly, some of them. And I think the critical
4 issue, when you get to co-location, from the
5 Commission's point of view is to make sure that
6 the co-location reflects the avoidance of
7 incremental cost, and are still requiring co-
8 locators to pay the same contribution to the
9 overall network.
10 Q We can save that for another docket, Mr.
11 McCluskey.
12 A Okay.
13 MR. DELVECCHIO. Objection,
14 Mr. Chairman. I don't know what that means, since the
15 whole discussion we've had here has been pursuant to
16 Mr. Giesy's desire to go into great detail about co-
17 location. Fine enough. But to the extent that Mr.
18 McCluskey wishes to note, as he has, that there still
19 remains the issue of contribution, and the issue is not
20 as simple as Mr. Giesy is making it appear, I think he
21 should be permitted to say that.
22 CHAIRMAN PATCH. Well, he has
23 already said it and it's on the record. And there's an
24 editorial comment in there as well.

1 Mr. McCluskey?
2 A Yes.
3 Q This is going to be a greatly simplified drawing.
4 A Thank you. Thank you. We've got Mr. Shuttleworth
5 coming up if you get into technical questions.
6 Q I'll try not to get too technical, because I'll
7 probably lose myself.
8 MS. LEHTONEN. Carl, can you
9 use the mike? We can't hear back here.
10 MR. GIESY. Oh, I'm sorry.
11 Please don't make me hold it. I'll try to shout. How
12 about that?
13 Q (By Mr. Giesy) And then, in this greatly
14 simplified drawing, there is a connection between
15 the LEC central office and the interexchange
16 carrier POP?
17 A Okay.
18 Q Will you accept that this is a rough and crude
19 representation of the basic connection between an
20 end user and the IXC POP?
21 A Assuming that they use NET to get from the end
22 user to the POP.
23 Q Sure.
24 A They could have their own facilities or whatever.

1 Q Okay. This section between the end user and the
2 LEC central office is typically referred to as the
3 "local loop"?
4 A Yes.
5 Q It can also be called the "network access
6 channel"?
7 A Yes. I'd say "access line", but go ahead.
8 Q Bear with me. Now, inside the LEC central office
9 is basically NET's computer, which does the
10 switching, correct?
11 A Yes.
12 Q Use the term "local switching"?
13 A Yes.
14 Q And then the piece that goes from the LEC central
15 office to the IXC POP is called "local transport"?
16 A Okay.
17 Q And this is essentially the structure that we see
18 at least reflected partially in your proposal,
19 carrier common line would represent the charge for
20 the network access channel, local switching ---
21 A It's a contribution element. In general, it's a
22 contribution element, but not necessarily
23 dedicated to the access line.
24 Q Okay. But would the local switching element

1 relate to the cost of the local switching to the
2 LEC central office?
3 A That is correct.
4 Q And then the local transport element would relate
5 to the transport between the central office and
6 the IXC POP?
7 A That's correct.
8 Q Okay. Now, local transport actually has two
9 subcomponents, there would be local transport
10 facilities and local transport termination?
11 A Termination, right.
12 Q "Local transport facilities" refer to the actual
13 line between the central office and the IXC POP,
14 is that a rough characterization?
15 A Yes.
16 Q And "local transport facilities" basically relates
17 to the interface between the transport line ---
18 A And the termination.
19 Q Yes, the termination. I'm sorry, the local
20 transport termination. Let me start again. The
21 local transport termination piece reflects the
22 cost of the hardware and software that does the
23 actual interface between the facilities piece and
24 the LEC central office, fair statement?

1 Q Alright. Now, once the terminating rate is
2 determined the originating rate is determined by
3 taking the total access rate and subtracting the
4 terminating rate, is that a fair statement, Mr.
5 McCluskey?
6 A Right, once we set the terminating rate first then
7 we deduct the traffic sensitive elements. Then we
8 go back, after we've taken the traffic sensitive
9 elements, we determine the overall terminating
10 rate and then we set the originating rate, that's
11 correct.
12 Q Now, within the terminating rate I believe you
13 just referenced it in your answer, there are
14 certain elements involved, there is the common
15 line charge, there's the local switching and local
16 transport, three elements?
17 A Right.
18 Q And what you do in setting, within the terminating
19 rate what you do is set local switching and local
20 transport at NET's version of its incremental cost
21 for those elements, is that correct?
22 A Right, trying to encourage efficient utilization
23 of NET's network, that's right.
24 Q And then the carrier common line charge is set

residual?

A That's correct. It's basically, we look at it as more of a contribution type element.

Q And this structure, within the originating side, is set the same way, correct?

A Yes.

Q And this same process is repeated for evening access and night and weekend access, is that correct?

A Night and weekend are set off of the increments of what the retail rate would be. The common carrier line credit or voice discount would only apply to the Day Period Feature Group D Traffic.

Q But otherwise determining the structure within the terminating and originating side of evening and weekend rates would be the same as we just described above or described previously?

A The specific calculations I think can best be discussed with Mr. Sheppard.

Q Let's look at your current MTS structure, Mr. McCluskey. The one that's in effect now, as I understand it, is in the range from zero to 960 minutes -- excuse me, from zero to 480 minutes there is no credit off of the MTS rate for daytime

1 that. To the extent that they can better overhead
2 costs by being more efficient relative to
3 advertising, relative to what we pay for billing
4 types of features, that gives them another
5 opportunity to compete, but if they can't, we're
6 going to make sure that the benefits are going to
7 flow through to the general body of ratepayers.
8 They ought to compete, the
9 Commission ought to encourage them to compete on
10 an efficiency basis, or because they were allowed
11 to bring value added services to the market place
12 to charge premium rates for it. So, I think that
13 in general we probably, from a network only point
14 of view, we're generally more efficient and our
15 differential shows it, but that differential is a
16 tenth of a cent. It was not a significant item.
17 Q Does NET feel that the unbundling of interstate
18 toll at this time is premature, is there perhaps a
19 better time to do this or is it really out of
20 NET's hands or anyone's hands for that matter?
21 A At best I think it's, you know, it's premature.
22 It may be necessary at some time in the future and
23 maybe we would want to evaluate it at some time in
24 the future, but at this point in time I think it's

1 premature. I'm not familiar with any IXCs not
2 getting services today that they wouldn't have.
3 If you really want to look at
4 unbundling I don't think that you need a specific
5 study. If you look at the last Commission
6 approved incremental cost study that found that
7 local transport, local switching, those kinds of
8 things were all identified in the incremental cost
9 study so the basic core issues are already there
10 and already available to the Commission if they
11 determine that they wanted to go through
12 unbundling.
13 The caution that I would
14 advise the Commission to, when they look at
15 unbundling, is to make sure that unbundling isn't
16 used as a mechanism to avoid paying contributions.
17 That people, if you tried to lower the
18 contribution in one of those elements they tried
19 to avoid that particular element so they're not
20 paying contribution and only want to pay the
21 incremental cost. That is not in the best
22 interest.
23 So, I think even, one, if you
24 decided to unbundle, you still have got another

1 major issue in front of you of making sure that
2 the unbundled elements are providing consistent
3 contribution as would happen if the call was
4 carried by the various LECs that operate in the
5 State.
6 Q I think you stated both yesterday and just a few
7 moments ago that NET wants the same level of
8 contribution from access as from toll?
9 A That's correct.
10 Q Why? What is the rationale behind that?
11 A The rationale is that it makes sure that the
12 general body of ratepayers are going to get the
13 benefits. It creates I think a better environment
14 for us to work with the carriers because basically
15 it's a revenue-neutral proposal and what we're
16 trying to do is, I think it reflects the reality
17 of the market place and is consistent with
18 economic theory that we have here.
19 I mean we have the incremental
20 cost, the study was approved by the Commission.
21 The incremental cost study identifies different
22 costs of providing different services and those
23 incremental cost differences should be reflected
24 in the difference between retail and wholesale

1 proposal that we have versus the FCC does have
2 some benefits over the FCC proposal. For example,
3 we have switching and transport set at incremental
4 cost. There's still some contribution in the FCC
5 rates. So, I think ours is more consistent with
6 carriers being allowed to put their, to build a
7 network consistent with the underlying costs.
8 The second difference where I
9 think we may have some advantages over the FCC is
10 that we're time of day specific and I think that
11 has some benefits instead of aggregate, but in
12 general I think that's what my statement was.
13 Other than those kinds of two caveats that if all
14 things were equal, mirroring interstate is a noble
15 objective. It's the retail prices that make that
16 very difficult and says to the Commission that
17 maybe we have to look at other alternatives.
18 Q We're going to get to the relationship that you're
19 proposing between retail and wholesale rates and I
20 understand that's the cornerstone to what you're
21 proposing. If I ask you to focus on other aspects
22 it's not that I'm asking you to abandon that
23 relationship, but trust me, there's going to be
24 plenty of time to talk about that.

1 The components that you have
2 established in setting access prices are broken
3 out into traffic sensitive components and non-
4 traffic sensitive components, is that correct?
5 A Yes.
6 Q And the traffic components are local transport and
7 local switching?
8 A That's correct.
9 Q And those you are establishing an incremental
10 cost, developed for a combination of those two
11 traffic sensitive elements, you assigned an
12 incremental cost to, correct?
13 A Yes, we took the incremental cost out of the
14 Commission approved study.
15 Q There is also the non-traffic sensitive component
16 to your access charge and is that based on
17 incremental cost?
18 A You're talking about the carrier common line
19 primarily, which I'd like to isolate as the
20 contribution element which is defined to provide a
21 closure to have the same contribution that we get
22 out of retail as we do on the wholesale side.
23 Q Is the carrier common line charge synonymous with
24 contribution? Are those interchangeable terms

THE COURT GROUP 1-800-255-5040 LASER STOCK FORM FMU

here?

A Basically under our proposal, yes. So, what we tried to do is set the various aspects, set them at the incremental cost and then isolate the contribution element in the carrier common line charge so, therefore, as you reduce your rates on retail you just reduce your rates on your carrier common line.

Q Well, contribution is a shortfall in revenue between your total incremental cost and your revenue requirement, isn't that correct?

A I usually look at contribution on a more disaggregated basis which says the difference from revenue minus incremental cost so I guess you could probably aggregate and come to a close thing on the total.

Q And non-traffic sensitive costs are costs themselves, they're not traffic sensitive costs, but they are costs, are they not?

A Yes, they are.

Q So, to say that contribution, which is a revenue term, is synonymous with non-traffic sensitive elements of your access proposal makes no sense to me. What am I missing here?

A You must be missing -- what I'm saying is that what I'm trying, the whole cornerstone of this is once you reflect the incremental cost differences is that we ought to get the same contribution which can be used if we want to do it to support non-traffic sensitive costs or to support the common overheads. The cornerstone of our argument is whether that call on a wholesale basis using the network of NET should provide the same contribution whether it's on a retail or a wholesale basis.

Q Are there non-traffic sensitive costs incurred by NET in providing toll?

A I'm trying to think. Usually when you talk about non-traffic sensitive, the issue that usually comes to mind is the access line. Usually the incremental cost study tries to identify the access loop as a separate identified entity and access, you can separate access and then you have local usage and you have toll usage.

Q Is the loop included in your incremental cost of toll?

A Not in my incremental cost of toll.

Q Why not?

THE COURT GROUP 1-800-293-3940 LASER STOCK FORM FMU

A Any more than it is, it's not in my incremental cost of access. The assumption is that you have an access line in place and once the access line is in place you could utilize that service to make local calls or to make toll calls within the state or interstate.

Q Isn't it necessary to have the loop in order to provide toll?

A It's becoming more and more of a gray area. You start to think about cellular types of services or different alternatives to connect to the public switch network. Historically, I think that was very easy, yes.

Q Well, given the current state of technology in New Hampshire and the bulk of your calls, is it necessary to have the access line for provision of toll, not what might be down the road, but what's actually going on every day in New Hampshire?

A Not necessarily. I'm thinking like if you have a PBX and you want to go to toll and you have a dedicated facility that would go from the PBX to an interexchange carrier's point-of-presence, it wouldn't necessarily mean an access line from the PBX to the central office and those are becoming

more common.

Q I'm still asking about the bulk of what the services are and I think you testified that 79 percent of the minutes, toll minutes in New Hampshire are residential?

A Well, I said residential and small business.

Q And I assume that most of those minutes aren't over anything too unusual, they're using pretty basic telephone service?

A That's true.

Q And those calls require the use of the loop for the provision of toll?

A As a generalization, that's true.

Q And have you included any cost of the loop in your incremental cost of providing toll?

A I haven't included it in the cost of providing toll or access.

Q Why not?

A Because it's a separate element and you can have the loop without making any toll calls. Because you have a loop doesn't require you to make a toll call.

Q I understand that. Didn't the Commission order NET, as part of 89-010, to allocate costs of the,

LASER STOCK FORM FMU

1 non-traffic sensitive costs for minutes of use for
2 all services which use the loop?
3 A They used a closure from the incremental cost to
4 the revenue requirement using an E-P methodology?
5 Q Well, we may be mixing concepts here. Yes, there
6 was an E-P methodology requirement, but wasn't
7 there also a requirement that NET allocate MTS
8 cost on a minute of use basis?
9 A Could be. I wasn't responsible for the
10 incremental cost. I will be closer to it in the
11 next go-around.
12 Q Well, the incremental cost study was developed --
13 well, I'll withdraw that question. Let's keep
14 developing, make sure we're using the right terms.
15 The carrier common line charge you stated is not,
16 you stated can be, forgive me if I've got this
17 wrong because I may have missed what you said
18 before, that the carrier common line charge for
19 all practical purposes is the same as the
20 contribution element in your access proposal,
21 correct?
22 A That is true.
23 Q Now the feds have what's called a subscriber line
24 charge and they also have an end user common line

1 charge, correct?

2 A I tend to call it an end user common line charge,

3 not as a separate, I've heard the term in this

4 docket used interchangeably.

5 Q How is that different from the carrier common line

6 charge that you're proposing here?

7 A Well, I think they're two distinct elements. In

8 the interstate arena, we had some testimony that

9 when Vermont mirrored the interstate in 1987,

10 access end-to-end was about 13 cents. We now know

11 that it's down around 7.7-7.8. There have been

12 tremendous drops.

13 As they reduce their cost they

14 decided that in a competitive market place that

15 they would have to, they could no longer recover

16 those elements on a traffic sensitive basis so

17 they instituted an end user as a mechanism for

18 recovering some of the revenue shortfall. That

19 was authorized by the FCC. We talked about that

20 when they brought their access rates down that, I

21 believe my testimony I said the uncapped number in

22 New Hampshire would be about $6.70 per line.

23 That was instituted and that

24 was as a result of transitioning access rates

1 down. The common line that I'm talking about here
2 is a contribution from toll and what we're saying
3 is if we're going to move access rates in New
4 Hampshire down, yeah, maybe there's an issue that
5 we ought to institute a common line charge.
6 I mean a vehicle for the State
7 as a mechanism for compensating, but I tend on the
8 State side to use it as saying it's not from a
9 customer point of view perceived by anybody other
10 than, by the customers, as a basic exchange
11 increase, but the carrier common line is the
12 contribution that is built into the rate structure
13 that we have in toll and what we would have in
14 access. It's not in our retail price, but it's
15 designed to produce the same level of
16 contribution.
17 Q Let's work through how the decrement approach, the
18 relationship between your retail pricing and your
19 access pricing works and you've been through this
20 in various formats, but I'm not sure you've ever
21 had a chance to really go through it from
22 beginning to end, and so what I'd like to do is
23 ask you to identify how you come to the numbers
24 you have in developing the incremental cost of

1 toll and what you subtract out to reach what your
2 access rate is and we will start first with
3 daytime rates in the low volume tier.
4 A I think the actual mechanics can best be left to
5 Mr. Sheppard when he comes up. I provided the
6 general guidance that said I wanted switching and
7 transport set at the incremental cost. I wanted a
8 structure that was designed to mirror the retail
9 structure.
10 I did not want to litigate
11 cost. I wanted to use the previously approved
12 cost studies, and that's where we didn't have cost
13 in our, that because access wasn't studied I want
14 to take the numbers from our litigated case that
15 was recently litigated in Massachusetts. So, I
16 kind of made the policy decision.
17 When it came to the actual
18 mechanics of going through that it was really
19 completed by Mr. Sheppard and probably best
20 addressed to him.
21 Q Okay, that's fine. For now though, let me ask you
22 just very generally, what is the total amount, I
23 take it you start with the retail rate and you
24 subtract a certain amount and you get a residual

1 number which is your access rate, correct?
2 A Yes.
3 Q And regardless of what you're starting retail rate
4 is, do you always subtract the same amount to get
5 your, in reaching the access rate each time?
6 A First of all what we try to do is try to establish
7 a cost difference between our toll service and
8 what it would be on an end-to-end switched access
9 type of basis. So, once we've gone to the study
10 and we find out what the differences in the
11 incremental cost are, we have to figure out how to
12 separate that between originating minutes and
13 access and we have to do it between terminating
14 and that is a balancing point.
15 I mean if we tried to load it
16 all on the originating side, the end result would
17 be, you know, if we tried to mirror interstate,
18 let's say for terminating, we'd end up with
19 originating at about 20 cents and terminating at
20 about 4 cents. The problem with us going through
21 the mechanics from that point of view is that it
22 would encourage people to use dedicated facilities
23 to avoid the originating access charges.
24 So, we had to compromise on

1 the interstate terminating. So, we set the
2 terminating rate for toll. After we deducted the
3 traffic sensitive, we looked at our retail
4 structure. We looked at the high end of the
5 market and then we subtracted terminating from the
6 overall carrier common line and that's how we
7 determine the rate.
8 Q And what is the number that you subtract from your
9 retail rate?
10 A Let's take the day period. We start off at 26
11 cents and we look at the incremental cost
12 differences between retail and wholesale and we
13 said that was roughly six tenths of a cent so now
14 we have a switched end-to-end target of
15 approximately 25.4 cents.
16 We deduct the incremental cost
17 differences of local switching, local transport
18 types of charges, and then we determine how much
19 we residually have to collect from the common line
20 charge and then we set the access target based
21 upon terminating at what we think we will collect
22 at the high end of the market and we residually
23 price the originating so the originating and
24 terminating for those components in the carrier

1 common line are what we do to close for those two
2 elements between their incremental cost and the
3 number that we have.
4 Q And the numbers, as we were tracking through that,
5 using your daytime rate for the low volume usage
6 was 26 cents a minute. You said you subtracted
7 six tenths of a cent and got to 25.4?
8 A Right.
9 Q And then you said you deducted the incremental
10 cost of local switching and local transport and
11 that is about one penny?
12 A Well, we had local switching, we had local
13 transport and then we had to do it on a per mile
14 basis, yes, we ended up with, it's about a penny,
15 yes.
16 Q So you deduct another cent and that gives you a
17 carrier common line charge of about 24.4 cents, is
18 that right?
19 A Right.
20 Q And what does a person buying access from you pay?
21 Let's start first with the simplest of all,
22 switched end-to-end daytime service, first minute,
23 what is a person buying access pay?
24 A He's going to pay us, if he's using switched end-

1 A The switched access rate, based on average mileage for
2 originating and terminating, would be 24.0 cents.
3 Q How did you calculate the 24.0 cents?
4 A We were going through the work papers of Mr. Sheperd
5 in this docket. We put things on a common basis that
6 we discussed yesterday. In other words, we had to get
7 access billed on the same kind of time sequence that
8 we have on our retail adjustment and we talked about a
9 conversation time adjustment factor so we put them
10 down into a common basis, and we took the incremental
11 cost difference for the network as well as the
12 overhead types of cost to establish a differential,
13 and we went through the process yesterday where we
14 said we looked at our retail rates, we took off the
15 incremental cost difference, we determined how much we
16 needed for carrier common line and we split that
17 between originating and terminating usage.
18 Q The IXC then for that minute would pay NET
19 approximately 24 cents you're saying per minute for
20 the day period on an access minute basis, right?
21 A Now that would be comparable to the retail rate if the
22 two were timed on the same basis minus the
23 differential that we talked about.
24 Q Whatever that last sentence was passed by me. Could

1 an economic choice to use the dedicated facilities.
2 Q In which case there would be a credit for the
3 originating side but not for the terminating side?
4 A That's correct.
5 Q Now, on your breakdown between originating and
6 terminating, which during the day rate is 14 -- I'm
7 sorry, 13.34 cents per minute on originating and 10.7
8 on terminating changes in your night and weekend rate,
9 correct?
10 A That's correct.
11 Q What is the breakdown between originating and
12 terminating on the evening rate?
13 A On the evening rate the originating is approximately,
14 using switched end to end, the originating average
15 mileage is approximately 3.5 cents and terminating is
16 approximately 10.5 cents.
17 Q So in the evening the originating is lower than
18 terminating and in the day the originating is higher
19 than the terminating. Why is that?
20 A We're trying to get the combined carrier common line
21 charge to make sure that we get the same contribution
22 in the retail versus the wholesale and we're trying to
23 match up in the day period towards the 26 cents non-
24 discounted period of the rate where in the evening

1 period we're solely trying to get to make them
2 comparable with the 15 cent retail rate.
3 Q What is the breakdown between the night weekend rate
4 between originating and terminating?
5 A Between the originating it's approximately 0.0. There
6 are some costs but it's out in the decimal points as
7 displayed in NET exhibit 662 and the terminating and
8 average mileage is 9.2 cents.
9 Q So, during the night weekend rate the originating rate
10 is, for all practical purposes, nothing and the
11 terminating access rate is 9.2 cents?
12 A There are some costs, but it is relatively minimal and
13 the majority of the cost is on the terminating side,
14 that's correct.
15 Q So, we go from a shift of higher on the originating
16 side during the day to almost nothing on the
17 originating side during the night weekend period?
18 A That's correct.
19 Q Is there a cost basis for that difference and how you
20 split that up?
21 A It's not a cost basis. It's an attempt to mirror the
22 retail structure and then ensure that we get the same
23 relative level of contribution whether they use NET or
24 whether they use access which could either be switched

1 end to end or it could be access provided by dedicated
2 facilities.
3 Q So although you stated that working towards cost based
4 rates and using incremental cost is the foundation of
5 how you're setting your access rates to begin with, it
6 plays no role in determining originating versus
7 terminating access?
8 A Originating and terminating access both have the
9 incremental cost, switching and transport type of
10 charges that are in there that come out of the
11 incremental cost study. As we talked about yesterday,
12 your carrier common line is primarily, is basically a
13 contribution element and what we're trying to be sure
14 of is to determine which way to get the same
15 contribution from wholesale as well as retail.
16 Q Let's go back then to the example you were giving of
17 someone who is entitled to credits. They're using an
18 IXC for carrying their intrastate toll traffic and
19 they have a high enough volume to get up to the 481 to
20 4800 band and even going into the final band of over
21 4800 minutes, day minutes, explain how those credits
22 are applied?
23 A We track the usage on a customer level and provide the
24 credits to the carrier and one of the important points

1 be an issue that would have to be revisited and I
2 didn't know whether it was maybe a positive or
3 negative impact from NET's perspective.
4 Q Just to compare that impact to the situation where the
5 independent telephone company becomes an access
6 provider and there is the existence of an NET
7 toll/access relationship I think when you talked about
8 the consequences of changes in the toll price in that
9 instance was the result that the independent telephone
10 companies would have to change their access prices and
11 their residual ratepayers would wind up facing the
12 consequences of that toll price decision in that
13 instance, isn't that true?
14 A Well, to the extent they're going to maintain some
15 sort of a relationship I think my testimony was that
16 all other things being equal to the extent that one of
17 the objectives in this docket was to retain uniform
18 toll rates from NET throughout this state and to the
19 extent that the independents concur in that it
20 certainly made some sense to me to have common access
21 rates and that the two should to in sync.
22 Q Now with respect to the contribution to be derived
23 under the NET access proposal, as I understand it, the
24 contribution will come from the carrier common line

LASER STOCK FORM FMU
THE CORBY GROUP 1-800-255-5040

1 component of the access charges, that's one source,
2 isn't that right?
3 A That is true.
4 Q And the equivalent component of toll service, isn't
5 that right?
6 A Well, it's not the carrier common line. It's in the
7 overall retail rate structure. We designed the
8 structure to give us equal contribution whether it's
9 toll or access but certainly that's the objective.
10 Q But it's for the access component of toll, isn't that
11 how you described it?
12 A I'm not sure what you mean by access component of
13 toll. You're saying it's a contribution. To me when
14 I have contribution, contribution is used to cover the
15 common cost of the corporation and I usually don't
16 automatically dedicate it towards an access line or
17 whatever. You have a pool of contributions which you
18 use to make up the difference between your incremental
19 cost and your overall cost and your revenue
20 requirement.
21 Q But the proposal contemplates a transition towards
22 having toll prices arrive at a point where they are
23 equal to the difference in incremental cost between
24 toll and access, don't they?

A Not a transition. We say the difference ought to be the difference in the incremental cost of the network plus the overhead cost that we included in the wholesale/retail differential.

Q Another place where contribution is derived from is basic local service?

A Well, two points. There is some contribution in my opinion in the overhead portion even in the differential, but it's, you know, I said we thought the differential could be construed as being conservative, conservative from the point of view that just being, even if we became solely an access provider we would still probably do advertising or cause the differences in those differential costs between retail and wholesale that don't have a direct correlation with volume.

Q So it does wind up then that the contribution really comes from the monopoly components of the business and really none from the overhead or none from the competitive components?

A No, I don't think, my proposal to this Commission is that if we say the incremental cost of toll is a penny, the cost of toll ought to go down a penny a minute. I think it's a policy decision for the

THE CORBY GROUP 1-800-255-5040 LASER STOCK FORM FMU

1 to pay past due amounts that they did prior to getting
2 their certification, because they had been carrying
3 traffic prior to being authorized.
4 Q Are you referring to the period of time when rates,
5 access rates, were 30 cents?
6 A The assumption was that they were close to 30 cents until
7 March of this year, I do remember that happening while I
8 had responsibility. I was involved with the Staff,
9 working with the Staff to compute the back amount that
10 was due to the local exchange companies.
11 Q You considered an access structure that produced levels
12 of 30 cents was a successful access structure?
13 A I think the Commission modified it, although their
14 recommendation wasn't the final, the Staff recommendation
15 wasn't adopted, but the industry, when we got together as
16 a group, came to the determination that this one would be
17 there.
18 I think their concern turned out to
19 be reasonable, that, you know, competition didn't come
20 through and provide benefits to all the customers located
21 in the State. To that extent, that was true. That was
22 one of their concerns going into it and that happened.
23 Q One last line of questioning, following up on a question
24 raised by Mr. Holmes. Mr. Holmes asked you for some

1 clarification about what you mean by contribution.
2 I heard a phrase in your response
3 which I wrote down, which was, "Contribution for the
4 benefit of the ratepayers."
5 A You and I define "contribution" as "revenue minus
6 incremental cost" is my definition of "contribution".
7 Q And, a contribution is actually a shorthand phrase for
8 contribution to cover something?
9 A Cover other services, it's the revenue excess of the
10 incremental cost. That contribution can be used to
11 support other services and to meet the overall revenue
12 requirement of the Company.
13 Q It's the contribution to cover fixed cost?
14 A No, I didn't say the contribution is necessarily
15 dedicated to any one, it is a source of contribution that
16 can be used for all the services required to meet the
17 overall revenue requirement.
18 Q If I understand that definition, there can be an
19 unlimited amount of contribution, at least in theory, if
20 you have all your rates priced well above incremental
21 cost and you keep up with some rates, you get more and
22 more contribution, that's just contribution?
23 A No, the issue came up, I think that was one of the
24 exercises we did at the request of the Staff here the

1 last time, once we completed the incremental cost we
2 priced out the various services. My recollection was, if
3 you priced all service at the incremental cost, you cover
4 about 60 percent of the revenue requirement.
5 Q And if the total of your service earns the remaining
6 revenue necessary to true up your revenue requirement and
7 you continue to earn more money than that, is that
8 contribution?
9 A I really don't understand the question. I define
10 "contribution" for an individual product as revenue minus
11 its incremental cost.
12 Q Well, we have used it more generally for all services,
13 hopefully, generates some contribution. If you recovered
14 all your incremental cost and you've received your fixed
15 cost for all your services and you've earned your
16 authorized rate of return and you still got more money
17 that's left coming in, is that contribution?
18 A If we have more revenue?
19 Q Than is authorized under your authorized rate of return,
20 revenue in excess of that authorized rate of return
21 contribution.
22 A I wouldn't define it necessarily as contribution. It's
23 revenue that can be used for retained earnings or pay
24 dividends or whatever, traditional regulatory rate base

THE COHBY GROUP 1-800-255-5040 LASER STOCK FORM FMU

1 regulation.

2 Q Sir, you understand that contribution is not necessarily

3 exclusively for the benefit of ratepayers but it could be

4 for the benefit of stockholders?

5 A Yes, within the parameters of traditional rate of return

6 regulations, just like a shortfall can be at the risk of

7 stockholders.

8 Q But I am simply trying to make clear contribution is not

9 something that is exclusively for the benefit of public

10 interest, it is for the benefit of net corporation, it is

11 the shareholders, and to the degree they are consistent

12 or persistent excess of earnings, it can be not in the

13 public interest?

14 A To the extent "it's not in the public interest", is your

15 term, and that is not mine. We follow the traditional

16 regulatory rate of return regulations that is prescribed

17 here in New Hampshire. That sometimes means that we may

18 be over our authorized rate of return or we may be under

19 our authorized rate of return.

20 To the extent that we exceed our

21 authorized rate of return, the Commission has authority

22 to open an investigation and determine that. And we have

23 had plenty of discussion on the record. You have looked

24 at the known and measurable changes on a going forward

THE COURT GROUP 1-800-255-5040 LASER STOCK FORM FMU

1 and you looked not only at the current level but whether
2 those will be returns on a going forward basis.
3 I don't think your characterization is accurate.
4 MR. DAVIDOW. I finished in half of
5 the time I allowed myself. I have no more questions.
6 COMMISSIONER ELLSWORTH. Thank you,
7 Mr. Davidow. Mr. Giesy?
8 MR. GIESY. Yes, sir.
9 INTERROGATORIES BY MR. GIESY:
10 Q Mr. McCluskey, Mr. Coolbroth questioned you quickly about
11 the last NET Order with regard to revenue requirement.
12 Do you remember that cross-examination vaguely?
13 A I remember the cross-examination of Mr. Coolbroth, I
14 don't remember the specifics about the last -- could you
15 rephrase the question?
16 Q Two very quick questions on that area. The test year
17 that was used to determine the revenue requirement was
18 1988, is that correct?
19 A That would have to be subject to check, I was more
20 involved in the compliance filing with the rate design
21 that came out, not the initial earnings determination.
22 Q But you will take, subject to check, it was 1988?
23 A Subject to check, I will, yes.
24 Q Will you accept, subject to check also, that the level of

THE CORBY GROUP 1-800-255-5040 LASER STOCK FORM FMU

1 the testimony of Michael McCluskey, which set forth the
2 policy, structure and pricing guidelines for the
3 Company's proposal for access charges in New Hampshire.
4 Specifically, my testimony describes
5 how the goals and the objectives that Mr. McCluskey laid
6 out were translated into the illustrative tariffs and the
7 rates that we have put into our proposal.
8 Just to review quickly, the
9 objectives articulated by Mr. McCluskey consisted of the
10 proper cost-based relationship between toll and access,
11 that is an economic differential versus a non-economic
12 differential; the promotion of economic efficiency;
13 providing equal contribution for the same services making
14 use of the same network facilities; fairness to all
15 participants in the marketplace; rates based on the
16 Commission-approved ICS results; no increases to other
17 services; promoting rate continuity and universal
18 service.
19 And, finally, a simple and familiar
20 structure, as has been deployed in other jurisdictions,
21 for the ease of understanding and administration. The
22 proposed rate structure for switched access basically
23 consists of two rate element categories.
24 The first rate element category is

THE CORBY GROUP 1-800-255-5040 LASER STOCK FORM FMU

1 the traffic-sensitive element. And this consists
2 primarily of the local switching elements, which recovers
3 the cost of interexchange calls being switched at the
4 local exchange carrier end offices, and it includes
5 billing-related costs.
6 And the local transport category,
7 which recovers the cost of interexchange carriers' use of
8 interoffice facilities, interoffice facility terminations
9 and tandem switching through the local transport
10 termination elements. And interoffice line haul
11 facilities through the local switching, local transport
12 per mile element.
13 The second category is the carrier
14 common line elements. And these are separate elements
15 that have been provided to provide contribution and
16 establish the overall economically efficient differential
17 with New England Telephone Company's retail toll rates,
18 ensuring that all participants, whether it be a local
19 exchange carrier or an interexchange carrier, provides
20 the same contribution for the same services, making use
21 of the same network facilities.
22 The elements are differentiated for
23 non-800 and 800 access service, to maintain an
24 appropriate cost-based differential with the

THE CORBY GROUP 1-800-255-5040 LASER STOCK FORM FMU

1 corresponding retail services and provide equal
2 contribution. The non-800 elements, in other words, the
3 non-800 access elements, are differentiated by the same
4 time-of-day, day-of-week rate structure as exists in our
5 retail MTS structure.
6 The non-800 day period originating
7 common line rate is also differentiated based upon end-
8 user specific volumes, and a credit structure which is
9 the exact same credit structure that we have in our
10 retail MTS schedule. These rates apply on an originating
11 basis, that is on an end-user to a carrier POP, and on a
12 terminating basis, which is a carrier POP to end-user
13 call.
14 The same rates -- the same rate
15 elements in our proposal are the elements that currently
16 exist in the interstate tariff. That is the local
17 transport and local switching and the carrier common
18 line. Therefore, there's familiarity to existing
19 interexchange carriers and LECs alike.
20 The same volume discount structure
21 and the mechanics, and the same wholesale/retail cost-
22 based differential relationships, as have been
23 established in Massachusetts, in Maine and Rhode Island,
24 are also incorporated in our proposal for New Hampshire.

LASER STOCK FORM FMU

1 Therefore, they're familiar to interexchange carriers and
2 LECs that are operating in those states.
3 In the development of the proposed
4 switched access rates, the overall, that is the
5 originating and terminating access, switched access rate,
6 was established based upon a retail rate, less the
7 difference in cost in providing toll versus access, in
8 order to provide equal contribution, whether the call is
9 handled by a carrier or whether it's a LEC retail call.
10 The traffic-sensitive rates of local
11 switching, local transport termination and local
12 transport facilities were established using the same unit
13 incremental cost from the New Hampshire incremental cost
14 study, which has been approved by this Commission.
15 The carrier common line rates were
16 established at an overall access rate, less the
17 originating and terminating traffic-sensitive rates and
18 the differential. And that's demonstrated in Chart 1 on
19 page 12 of my direct testimony.
20 I believe these rate elements advance
21 the goal of efficiency, in that, one, the traffic-
22 sensitive elements are priced at the level of their
23 incremental cost, thereby encouraging economic decisions,
24 which will minimize the overall network cost. And,

1 secondly, the cost-based relationship between access and
2 toll ensure fairness to all market participants, and the
3 competition proceeds on the basis of cost minimization,
4 innovation and value-added.
5 I believe the rates advance the goals
6 of fairness, continuity and universal service as well.
7 All market participants will be treated equal, since each
8 toll minute or access minute will provide an equal
9 contribution, to the extent they use the same network's
10 switched facilities. The "maintenance of contribution"
11 means that no other prices, in particular, exchange
12 service, will need to be changed at this time.
13 Also, in the development of the
14 rates, I have accounted for differences between the
15 conversation minute and the access minute, such that the
16 access minute on the originating basis is discounted to
17 reflect the fact that carriers do pay for non-
18 conversation time on originating access, whereas our toll
19 rates are not charged for non-conversation time.
20 And I've reflected that in the rate
21 development. The retail/wholesale cost differential is
22 based upon network and billing incremental costs, plus
23 the marketing and customer services related contributions
24 to overhead.

THE CORBY GROUP 1-800-255-5040

1 The incremental cost, which I've used
2 to develop the rates, we use the approved New Hampshire
3 incremental cost elements for MTS and 800 service, to
4 derive the incremental cost for switched access on the
5 same basis as they were developed for toll, since both
6 are essentially the same service and using the same
7 network facilities and network functions.
8 I have used the Massachusetts carrier
9 access billing costs as a target for New Hampshire, since
10 the New Hampshire incremental cost study did not include
11 carrier access billing in its study. In terms of the
12 marketing and customer services overhead contribution,
13 those are based upon account-specific expenses consistent
14 with how we have done this in other jurisdictions.
15 Some of the other tariff
16 modifications in our proposal are to incorporate or
17 otherwise make reference to interstate language related
18 to the administration of ordering, provisioning of
19 access, maintenance, billing of charges and payment
20 provisions. I've also put language in the tariff that
21 introduces or it clarifies the jurisdictional reporting
22 requirements.
23 And, finally, there is language
24 introduced into the illustrative tariff concerning audit

THE CORBY GROUP 1-800-255-5040 LASER STOCK FORM FMU

1 provisions of the carrier common line usage credits. In
2 my rebuttal testimony, I have addressed some claims that
3 we have an incentive to cost-engineer access arrangements
4 to advance our own competitive interests. And I don't
5 believe that those fears are realistic fears.
6 First of all, access and toll use the
7 same network and they draw from the same inventory of
8 facilities. To put such a practice into place would
9 require additional expenses on the part of the Company to
10 administer the intentional biasing and the massive
11 rearrangements that would be required to rearrange
12 existing toll and access facilities, as well as to
13 administer going forward with such a biasing.
14 Finally, the incremental cost study
15 methodology used by New England Tel, and as has been
16 approved by the Commission in docket 89-010, recognizes,
17 on a going-forward basis, that it's a long-run study
18 which would ignore embedded facilities and employ the
19 same equally efficient facilities and network cost
20 functions for both services, whether it be a retail toll
21 service or a wholesale access service.
22 My rebuttal testimony also address
23 certain allegations of LDN's witness, on the part of us
24 using the wrong cost basis. I believe we've used the

THE CORBY GROUP 1-800-255-5040 LASER STOCK FORM FMU

1 correct cost basis for pricing in this docket. We've
2 used the previously approved New Hampshire incremental
3 cost study results to produce the necessary switched
4 access prices.
5 The Commission order in Order No. 2--
6 20,082, at pages 35 through 88 -- 38, adopted the
7 Company's New Hampshire incremental cost study as the
8 standard for ratemaking purposes. In addition, they
9 adopted it for -- as being relevant for other business
10 and regulatory decisions.
11 Staff, in its direct testimony, at
12 page 9, states that the New Hampshire incremental cost
13 study is sufficiently unbundled, and at this time there
14 is no need to embark on a new alternative method for
15 costing.
16 Finally, my rebuttal testimony
17 addressed the concerns raised by Mr. Goldfarb regarding
18 the application of the credit structure, and I think Mr.
19 Goldfarb, in his testimony or his revised testimony, has
20 stated that that's no longer an issue. He understands
21 how the credits apply, in that the credits apply equally
22 to access minutes, toll minutes, or a combination of
23 both.
24 And that, in the case of both, the

THE COURT GROUP 1-800-255-5040 LASER STOCK FORM FMU

1 retail minutes would go through the credit structure
2 first, and would be not discounted, to the extent that
3 they don't meet the threshold level, and they were used
4 to meet the initial threshold level.
5 Basically, it's the same concept and
6 the same mechanics as the credit system that has been put
7 in place in other jurisdictions.
8 Q Does that complete your summary, Mr. Shepherd?
9 A Yes, it does.
10 Q Lastly, Mr. Shepherd, is this the first time you've
11 testified before a public utilities commission?
12 A This is the first time I've testified before a public
13 utilities commission and been subject to cross-
14 examination. I have filed testimony in Massachusetts and
15 another docket, which never made it to hearings.
16 MR. DELVECCHIO. Mr. Chairman, Mr.
17 Shepherd is available for cross-examination.
18 MR. GIESY. I think, was that last
19 comment meant to imply that we're supposed to be nice to Mr.
20 Shepherd?
21 THE WITNESS. It's my first time. Be
22 gentle.
23 CHAIRMAN PATCH. Okay. Among local
24 exchange carriers, do you have an agreed order of cross-

1 switched access rates were then determined?

2 A Yes. Basically the Chart 1, in my testimony, on page 12,

3 identifies how the overall switched access rate was

4 determined.

5 Basically, it's based upon the

6 existing retail rate, less the difference in cost to

7 provide switched access in toll services. And that

8 determines what the overall access rate would be for an

9 originating plus terminating call.

10 Q I'd like to take you for a moment through a little more

11 specific, in terms of the individual rate elements in New

12 England Telephone's toll rates. The traffic-sensitive

13 elements, could you describe again what those are and

14 what the resulting rates were that were developed?

15 A Sure. The traffic-sensitive elements consist of the

16 local switching element, for one, and local transport

17 elements for the other two elements. Basically, the

18 local switching element recovers the cost of switching

19 interexchange carrier calls at the local exchange

20 carrier's end office, and it also includes the billing-

21 related costs associated with billing carrier access

22 charges.

23 The local transport element recovers

24 the cost of the interexchange carrier use of the local

THE COURT GROUP 1-800-235-3040 LASER STOCK FORM FMU

1 exchange carrier's interoffice facility terminations.
2 And, to the extent that tandem switching is involved, it
3 also includes tandem switching.
4 Finally, the local transport per mile
5 charge covers the cost of the use of local exchange
6 carrier interoffice facility line haul.**3
7 Q (By Mr. Coolbroth) And, would each of those elements
8 apply on both the originating and terminating end of
9 switched access?
10 A To the extent the carrier uses switched access, yes, they
11 would apply on both ends of the call.
12 Q But, if a carrier uses switched access on one end, it
13 would apply on that end?
14 A It would only apply to the end that the carrier used the
15 local exchange carrier switched network.
16 Q Do the element use apply to 800?
17 A These elements apply to non-800 as well as 800.
18 Q In addition to the traffic-sensitive elements there's a
19 carrier common line element?
20 A Yes, there is.
21 Q And, could you describe for the Commission the structure
22 of that rate element?
23 A Yes. The carrier common line element is an element that
24 applies on both an originating and a terminating basis to

THE CORDY GROUP 1-800-255-5040

1 the extent that the carrier uses the local exchange
2 carrier switched network. The carrier common line
3 element is differentiated according to the originating
4 versus the terminating usage, and is also differentiated
5 as to whether the carrier uses the switched access
6 service for 800 access service versus non-800 access
7 service.
8 Another differentiation is that it's
9 time of day sensitive for the non-800 service in order to
10 maintain the proper cost-based alignment with New England
11 Telephone MTS retail service, which is, in fact, time of
12 day rate differentiated.
13 Q Now, developing the common line charge, am I correct, NET
14 first identified an overall common line charge objective?
15 A In developing the carrier common line charge, the first
16 step is to look at the relevant or the corresponding
17 retail service to which the comparison is being made. In
18 the case of non-800 access, that would be NET MTS
19 service.
20 Basically what happens is that the
21 rate that New England Telephone MTS, which is currently
22 at twenty-six cents per day, as an example, would be
23 reduced by an amount equal to what we determine to be the
24 cost differential between pricing carrier switched access

1 and toll service. So, it's reduced by an amount of
2 approximately six-tenths of a cent.
3 The individual differential and what
4 the resulting overall carrier common line is contained in
5 Chart 1 on page 12 of my testimony.
6 Q That would produce a total carrier, common carrier
7 charge, for a call that is switched access on both ends?
8 A Well, I left out one part, to get to the carrier common
9 line amount we also reduced the overall switched access
10 charge by an amount of the originating plus the
11 terminating traffic-sensitive elements. So, we reduced
12 it by the amount of the incremental cost of local
13 switching and local transport elements on an average
14 call.
15 Q And that is also after you converted it to a quality of
16 the kind, that of the kind of minutes that are called?
17 A The rate is initially developed entirely on a
18 conversation minute basis. And then to get the
19 originating access minute rate we reduce the conversation
20 minute equivalent rate by a factor that is an amount
21 equal to the non-conversation time associated with an
22 access minute.
23 So, the carriers are benefited by us
24 reducing the conversation rate to an access minute rate

1 from originating access, to reflect the fact that we
2 don't charge retail customers for non-conversation time
3 in the same way that we charge carriers for the non-
4 conversation time on originating access.
5 When you look at originating access,
6 originating access looks to us like a call to a carrier.
7 Once the carrier has entered it, there is time that goes
8 on either for call set-up, for busies or for don't
9 answers, until the customer on the far end does pick up
10 the phone.
11 So, we reflect that in the rate and
12 try to keep, through this process, rates on an equivalent
13 basis. If access and our retail toll were on an
14 equivalent timing basis or charging basis at least, they
15 would receive the same treatment.
16 Q Now, once the overall carrier common line charges has
17 been developed, you need to split that between
18 originating and terminating ends, isn't that true?
19 A Yes, that is true.
20 Q How did you do that?
21 A For day non-800 switched access, the split was determined
22 basically based upon what I believed would be the lowest
23 possible retail rate we would charge an end user. And
24 basically that was the rate that would occur with the

customer that had 150,000 day minutes.

What I did is, I used that to establish what the terminating switched access overall rate would be and then I deducted the traffic-sensitive rate incremental cost to arrive at what the terminating carrier common line rate would be.

To determine the originating carrier common line rate, it's simply the residual between what the total of the overall access charge is required would be less the terminating charges less the traffic-sensitive incremental cost for the originating call.

Q And for non-800 access, there are discounts that apply to the carrier common line charge?

A In the case of non-800 access, to the extent that Feature Group D is used during the day period on a direct dial basis, we do have a credit structure in place that provides volume discounts, which is the exact same credit structure on our retail MTS service.

Q Are those applied on the originating or terminating end?

A Those are applied to the originating access common line carrier minutes.

Q And do similar discounts apply to 800 access service?

A No, they do not.

Q Why is that?

THE COURT REPORTER 1-800-255-5040 LASER STOCK FORM FMO

1 that would result from the NET proposal with the current
2 numbers?
3 A That reflects the rate element rates that would result as
4 a result of the NET 9/22 MTS reduction on a rate element
5 and time of day specific basis for both originating and
6 terminating access.
7 Q I believe you testified previously that the structure
8 which you are proposing is based on the structure of the
9 NET interstate tariff, is that correct?
10 A The basic structure, in terms of rate elements that are
11 applicable in the tariff, that is carrier common line
12 elements and the local switching elements and the local
13 transporting elements, is the same structure that appears
14 in the interstate tariff.
15 Q Am I correct though that the basic structure may be the
16 same, there are a number of differences between your
17 proposal for New Hampshire from your current existing
18 interstate access tariff?
19 A The illustrative tariff reflects both the structure of
20 the interstate tariff and the relationship that the
21 illustrative tariff would have to have with the existing
22 retail rate, in order to maintain the proper price
23 relationship based on a cost differential. So, it does
24 reflect volume-sensitivity in the originating carrier

THE CORBY GROUP 1-800-255-5040 LASER STOCK FORM FMU

common line rate, it does reflect time of day differentiated rate and it does reflect separate costs for non-800 versus 800 access service.

Q Those are all elements which are not in your interstate tariff which are included in your intrastate tariff?

A That is correct, the interstate tariff today does not contain time of day or volume-sensitive rates.

Q For example, looking at this chart on the right-hand page of 1 of 2 of NET Exhibit 662, you have three columns labeled, "day", "evening" and "night and weekend". If we look at the interstate tariff, there would only be a single column?

A That is correct.

Q And, in addition, to the bottom right-hand corner of page 2 of 2, the originating carrier common line credits, that item would not appear on your interstate access tariff either?

A That is not in the interstate tariff.

Q Now, if we look at the individual numbers which make up the table, which is on the right-hand side of page 1 of 2 of NET Exhibit 662, I would like to, those numbers are calculated, are they not, in a manner that is different for New Hampshire than the way those numbers are calculated on your interstate tariff?

THE CONDY GROUP 1-800-255-5040 LASER STOCK FORM FMU

1 A The way that those numbers are calculated on the
2 interstate tariff basically reflects what has happened to
3 the interstate rate over time as a result of price cap
4 regulations. So, yes, there would be a different basis
5 as to how the numbers were calculated.
6 Q So, for example, I believe you said that the transport
7 and switching numbers, which are shown on this page 1 of
8 2 of your Exhibit 662, are calculated on a long-run
9 incremental cost basis?
10 A The traffic-sensitive elements of local transport and
11 local switching have been calculated to reflect what the
12 incremental cost of those elements would be.
13 Q So, for your proposal in New Hampshire, for those
14 elements, there is no contribution which is contained in
15 those two elements?
16 A The contribution that is proposed is contained in the
17 carrier common line elements.
18 Q And, that is different, is it not, from your interstate
19 tariff, which has contribution contained in all three
20 elements?
21 A If the interstate rate had been calculated using
22 incremental costs, you would probably find that the
23 incremental cost would not be any different than what we
24 have submitted here. And, yes, there would be

THE CORBY GROUP 1-800-255-5040 LASER STOCK FORM FMU

1 contribution in each of those elements.

2 Q Also looking at your proposed rate elements, shown on the

3 right-hand side of page 1 of 2 of Exhibit 662, I notice

4 that there are a number of elements for which have zeros,

5 all zeros, for which no charge is made, am I correct,

6 that is what this exhibit shows? I am not asking for an

7 explanation, I just want to make sure I'm reading the

8 table correctly?

9 A Yes. You will notice that the transport element do have

10 rates in the night and weekend period, which would be

11 zero.

12 Q And that is on both the originating and on the

13 terminating side?

14 A Correct.

15 Q Now, if I went to your interstate tariff, access tariff,

16 am I correct that I would not see any charges there, any

17 elements there which were zeros?

18 A If you went to the interstate tariff, you would not find

19 any charges in there with zeros for transport, for local

20 or for terminating switched access, because they are not

21 time of day differentiated.

22 Q And also because they contain some contribution?

23 A That is also correct.

24 Q And also looking at the numbers on the right-hand side,

LASER STOCK FORM FMU
THE COURT REPORT 1-800-255-5040

1 doesn't that also show that the originating carrier
2 common line for night and weekend is also all zeros and
3 therefore free?
4 A On originating carrier common line, yes.
5 Q Mr. Shepherd, one more difference between the numbers
6 contained in your New Hampshire proposal from the numbers
7 contained in your existing interstate access tariff, am I
8 correct that, in your existing interstate access tariff,
9 the amount of originating carrier common line is the same
10 as the terminating carrier common line charge?
11 A The interstate carrier common line for originating and
12 terminating access do in fact contain rate parity as a
13 result of an FCC Order.
14 Q So, the answer is "yes", those are the same on the
15 interstate?
16 A The interstate is the same.
17 Q Are you aware that that is also true for the originating
18 and terminating carrier common line elements for the
19 independent telephone companies as well?
20 A I am not familiar with the independent rates.
21 Q Now, if you look at your proposal for New Hampshire,
22 would you agree that your originating carrier common line
23 charges and your terminating carrier common line charges
24 are not the same for any of your three times of day?

THE CORBY GROUP 1-800-255-5040 LASER STOCK FORM FMU

A Yes, I would agree that they are not the same and, again, that is as a result of the manner in which the rates are calculated, in order to provide a cost-based differential with the existing retail rates, and to also reflect, in the case of terminating access, that the rate for terminating access was set at a target equal to what we anticipated to be the lowest possible effect of the rate would be in our retail structure.

Q But, in your interstate access tariff, you have not set your carrier common line charges in that manner, you have not set a target for one and then residually set the other, have you?

A The interstate rates were set initially according to FCC rules regarding how the rates for common line should be established and, over time, have transitioned as a result of subsequent filings and the implementation of price cap regulations. So, no, they do not reflect the same method or manner in which the retail rate for the intrastate wholesaler rates have been calculated.

Q So, again, that is another difference between the way you calculated your proposed intrastate access tariff from the way your current interstate access tariff is structured?

A That is correct. And, again, it's to recognize that

LASER STOCK FORM FMU

there should be a cost-based differential between the existing retail rate and the wholesale switched access rate.

MR. LIGHTBODY. Thank you, I have nothing further.

CHAIRMAN PATCH. Thank you.

Mr. Rothfelder.

INTERROGATORIES BY MR. ROTHFELDER:

Q Good afternoon, Mr. Shepherd.

A Good afternoon.

Q Mr. Shepherd, is the rate design of the NET proposed access rate consistent with the Commission's Order on rate design incremental cost in Order 20,082 and docket DR 89-010?

A I believe it is. In the development of the rates, we have used the Commission-approved incremental cost study results in the New Hampshire ICS in order to, one, establish what the cost-based differential should be between our wholesale and our retail rate and; two, to develop the individual rate element rates for the traffic-sensitive elements of switched access.

I believe it's consistent because it does use the incremental cost study results in a manner that were used consistent for toll service. And to the

LASER STOCK FORM FMU
THE CORBY GROUP 1-800-255-5040

1 extent that toll service currently contains a level of
2 contribution the switched access rate contains an equal
3 amount of contribution.
4 I recollect that in the Order 20,082,
5 which approved the incremental cost study results, that
6 that Order also went on to talk about the recovery of
7 non-traffic-sensitive costs from toll service and local
8 exchange service. In terms of the cost recovery, it
9 basically said that the non-traffic-sensitive incremental
10 cost should be assigned to local service and toll service
11 based upon a minute of use allocator.
12 I believe that, because of the fact
13 that our existing toll rates were based upon that
14 incremental cost study and approved by the Commission,
15 that the same level of contribution that is in our
16 carrier switched access proposal is consistent with the
17 way toll was done and, therefore, is consistent with
18 using incremental cost as a basis for pricing of switched
19 access.
20 Q Perhaps Mr. McCluskey touched on this, perhaps I could
21 say that about any question in this docket. But, just
22 from your perspective, Mr. Shepherd, the proposed rate
23 structure for your access rates are similar to other
24 intrastate switched access tariffs in New England, and

THE CORBY GROUP 1-800-255-5040 LASER STOCK FORM FMU

that is, of course, the structure in your proposed illustrative tariff in Exhibit 662?

A The structure that is in our illustrative tariff and in the Company's proposal in this docket is similar and consistent with the structures that are currently in place in the jurisdictions of Massachusetts and Rhode Island and also in the State of Maine.

In terms of the linkage of the wholesale and retail rates based upon a cost differential, based upon the volume credits and also based upon time of day differentiated rates linked to the existing rate structure.

Q And focusing in particular on your volume, proposed volume discount and common line usage credit structure, are those specific items in place in other states?

A The carrier switched access tariffs in the eastern LATA of Massachusetts and Rhode Island and in Maine contain a structure that consists of volume credits or volume discounts based upon originating common carrier line rates.

MR. ROTHFELDER. Thank you. I have no further questions.

CHAIRMAN PATCH. Thank you. The IXCs, there are only two of you here now. Have we got a

THE CORBY GROUP 1-800-255-5040 LASER STOCK FORM FMU

1 charges shown, termination charges are basically for
2 the equipment used to terminate the call and transport
3 charges are basically used for the trunk or the line
4 to carry the call.
5 (By Mr. Cohen.)
6 Q Mr. Salvatore, can I ask a question? My name is Gary
7 Cohen.
8 A (Salvatore) Yes, Mr. Cohen.
9 Q During the hearings if I recall the testimony from Mr.
10 Shepherd and Mr. McCluskey in terms of a carrier
11 common line element, they talked in terms of a
12 contribution element as opposed to anything specific
13 geared to the local loop.
14 A (Salvatore) As I said, traditionally the carrier line
15 charge was a charge for the local loop. Mr. Shepherd
16 can help me with this, the way the elements themselves
17 are structured is that the local transport and local
18 switching elements are set at incremental costs. The
19 remainder of the access charge is put into the carrier
20 common line charge. So, one could think of it as a
21 contribution element.
22 Q So, what you're saying, you're not suggesting that the
23 loop is being priced at incremental cost, are you?
24 A (Salvatore) No, I'm saying that the local transport

and the switch are priced at incremental cost. Carrier common line is the difference between the incremental cost for local switching and the incremental cost of local transport to get to the 16 cent total access charge.

Q So, it's the remainder?

A (Salvatore) It is the remainder. I used the term "residual."

Q Okay.

A (Salvatore) The Stipulation and Agreement also states that the movement of NET's intrastate access rates in the direction of cost and towards interstate levels is a desirable objective. It also states other objectives which are desirable such as universal service, rate stability, fairness and a reasonable opportunity to recover revenue requirement. As I said earlier, the desirability of further movement towards interstate rates on or after July 1, 1997, may be considered after the conclusion of the trial period. However, no signatory is committing to any further movement towards interstate rates and no presumption is intended that any such further movement must or should occur.

MS. IGNATIUS: Are there any

THE CORDY GROUP 1-800-255-3040 LASER STOCK FORM FMU